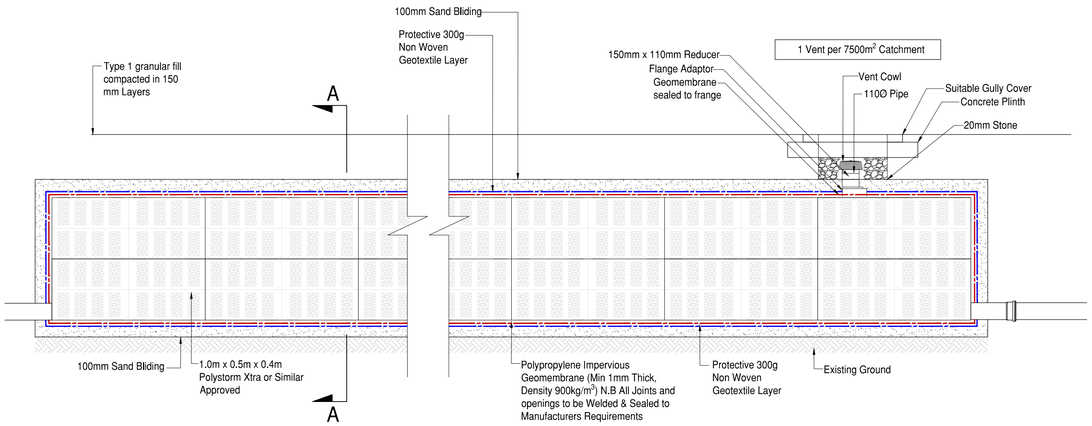

Typical Cellular Storage Tank

Scale 1:20

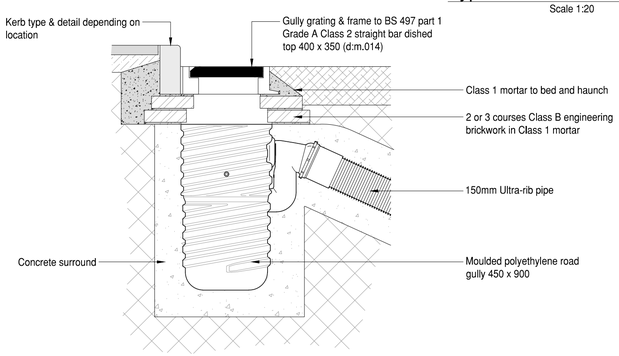

Gully Detail

NTS

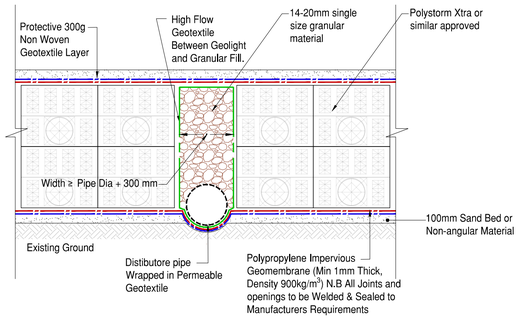

Section A-A

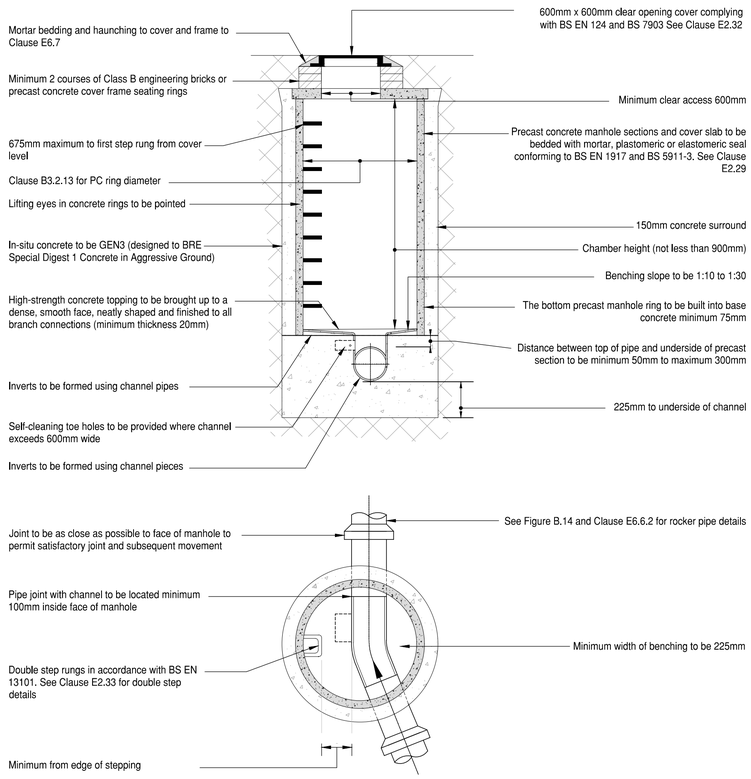

Typical Manhole Detail (Max depth from cover to soffit of pipe 3.0m)

Scale 1:20

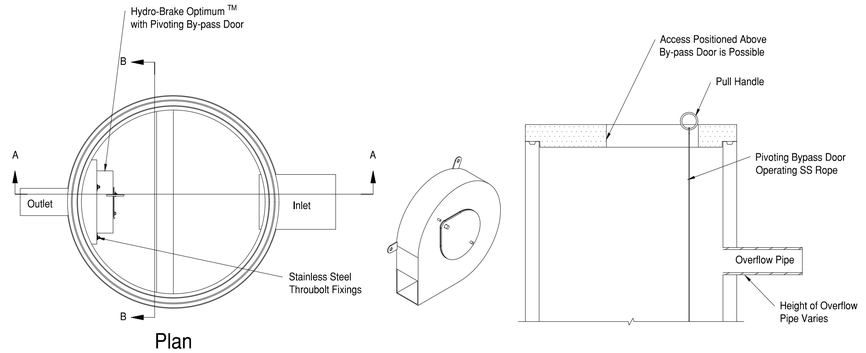

Plan

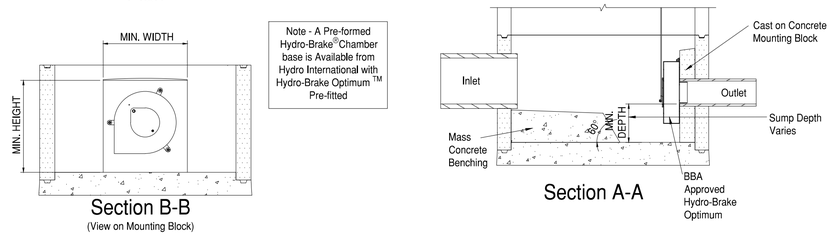

Note - A Pre-formed Hydro-Brake®Chamber base is Available from Hydro International with Hydro-Brake Optimum ™ Pre-fitted

Section B-B

(View on Mounting Block)

Section A-A

Typical Hydrobrake Chamber Detail With Overflow Pipe

Scale 1:20

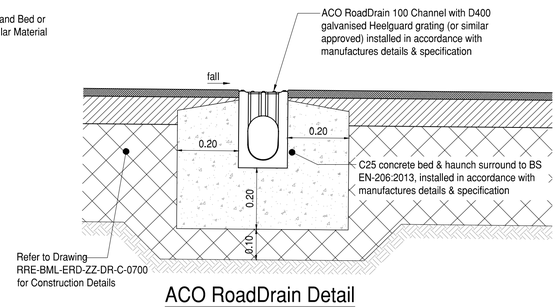

ACO RoadDrain Detail

NTS

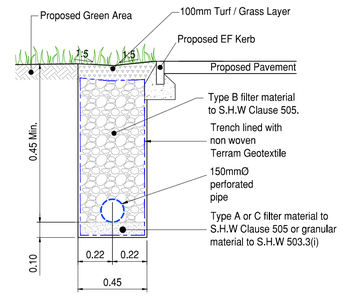

Typical Filter Drain Detail

Scale 1:20

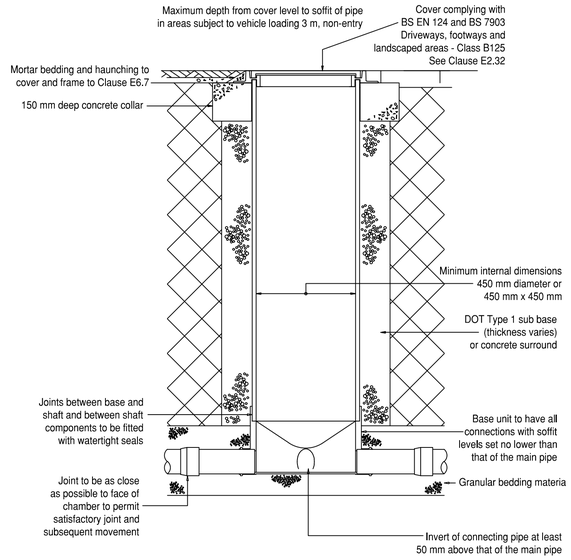

Typical Inspection Chamber Detail (Flexible Material Detail)

NTS

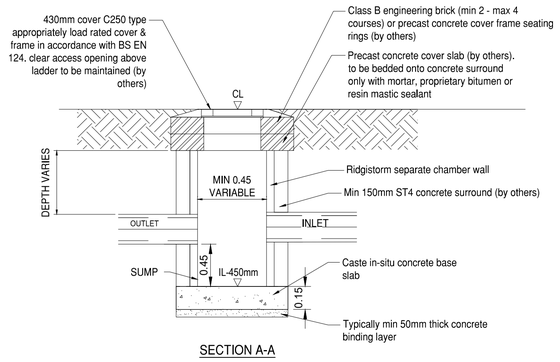

SECTION A-A

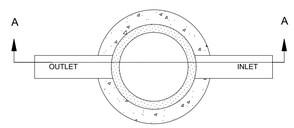

PLAN

Rigistorm Separate Catchpit

NTS

Safety, Health & Environmental Information:

In addition to the hazards and risks normally associated with the types of work detailed on this drawing, please note the significant hazards identified by symbols below,

INDICATES A RESIDUAL RISK AS A WARNING

INDICATES A RESIDUAL RISK FOR INFORMATION

and described below:

Construction/Maintenance/Cleaning/Demolition

Refer to Drawing:

General Notes:

1. Do not scale from this drawing.

2. All dimensions are in meters (m), all levels in metres (m) unless noted otherwise.

3. Discrepancies or omissions are to be reported to the Engineer prior to work commencing.

4. Materials and workmanship are to comply in all respects with current British Standard Specifications, Codes of Practice, and Building Regulations Approved Documents.

5. The copyright of this drawing is vested in the Engineer and must not be copied or reproduced without written consent.

6. The Contractor is to check and verify all building and site dimensions, levels and sewer invert levels at connection points before work commences.

7. This drawing is to be read in conjunction with all relevant specifications and drawings issued by the Engineer, Architect and other Specialists.

8. Details and locations of existing services are based on the Topographical Survey and Utility Records received from Third Parties and Service Providers respectively, and should be considered indicative and approximate only. The existing services shown on drawings may not be exhaustive. The Contractor shall use Trial Pits and other approved methods to accurately locate and verify the positions and depths of all existing services before commencement of works on site.

PRELIMINARY DRAWING

This drawing is not to be used for construction

Rev	By	Chk'd	Date	Description
P02	VI	AM	10/02/21	Filter Drain Detail Added
P01	VI	AM	22/10/20	Preliminary Issue

Client

R&R Engineering Ltd

BarnsleyMarshall Limited
1 Birch Court
Blackpole East
Worcester
WR3 8SG

Tel: 01905 330550
Email: design@barnsleymarshall.co.uk

Project

R&R Engineering
Wrexham Industrial Estate

Drawing

Drainage Details

Drawn by	VI	Date	22/10/20
Checked by	AM	Date	22/10/20

Drawing No. RRE-BML-ERD-ZZ-DR-C-0501

Revision P02

BML Job No. 1017-01

Drawing Scale at A1: As Shown

CAD Filename: