PROPOSED RESIDENTIAL DEVELOPMENT LLAY NEW ROAD, RHOSROBIN

TRANSPORT ASSESSMENT

PREPARED ON BEHALF OF:

SG ESTATES

CAMERON ROSE ASSOCIATES

Lymedale Business Centre,

Hooters Hall Road,

Newcastle-under-Lyme,

Staffordshire, ST5 9QF

CONTENTS

1.0 INTRODUCTION 1
2.0 THE DEVELOPMENT SITE 3
3.0 THE PROPOSED DEVELOPMENT 15
4.0 BASELINE TRAFFIC CONDITIONS 19
5.0 FUTURE TRAFFIC CONDITIONS 23
6.0 IMPACT OF DEVELOPMENT PROPOSALS ON THE OPERATIONAL PERFORMANCE OF THE LOCAL HIGHWAY NETWORK 26
7.0 SUMMARY AND CONCLUSIONS 30

FIGURES

2-1 SITE LOCATION (IN TEXT)
2-2 WALKING ISOCHRONE PLAN (IN TEXT)
2-3 CYCLING ISOCHRONE PLAN (IN TEXT)
2-4 PUBLIC RIGHTS OF WAY PLAN (IN TEXT)
2-5 CYCLE FACILITIES IN CLOSE PROXIMITY TO THE SITE (IN TEXT)
2-6 BUS STOP LOCATIONS IN CLOSE PROXIMITY TO THE SITE (IN TEXT)
4-1 2014 SURVEY TRAFFIC FLOWS
4-2 2021 BASE TRAFFIC FLOWS
4-3 2026 BASE TRAFFIC FLOWS
4-4 COMMITTED DEVELOPMENT P/2014/0905 - OUTLINE APPLICATION FOR 365 DWELLINGS AND ERECTION OF 300 SQUARE METRE RETAIL UNIT - ALL DETAILED MATTERS RESERVED
4-5 COMMITTED DEVELOPMENT P/2016/0189 - OUTLINE APPLICATION FOR RESIDENTIAL DEVELOPMENT (UP TO 189 DWELLINGS) WITH ALL MATTERS RESERVED EXCEPT FOR ACCESS
4-6 2026 BASE PLUS COMMITTED PLUS DEVELOPMENT TRAFFIC FLOWS
4-7 PERSONAL INJURY COLLISION LOCATIONS (IN TEXT)
5-1 DEVELOPMENT DISTRIBUTION

5-2 DEVELOPMENT ASSIGNMENT
5-3 2026 BASE PLUS COMMITTED PLUS DEVELOPMENT TRAFFIC FLOWS

TABLES

2-1 IHT SUGGESTED ACCEPTABLE WALKING DISTANCE
2-2 BUS SERVICES AND HEADWAYS
2-3 DISTANCE TRAVELLED TO WORK STATISTICS
4-1 GROWTH FACTORS (WREXHAM 003)
5-1 PROPOSED RESIDENTIAL VEHICLE TRIP RATES
5-2 VEHICLE TRIP GENERATION
5-3 PROPOSED DEVELOPMENT DISTRIBUTION BY LOCAL AUTHORITY
5-4 PROPOSED DEVELOPMENT DISTRIBUTION BY ROUTE
6-1 PLAS ACTON ROAD/ B5425 LLAY NEW ROAD – PICADY RESULTS
6-2 MITIGATION - PLAS ACTON ROAD/ B5425 LLAY NEW ROAD – LINSIG RESULTS
6-3 B5425 LLAY NEW ROAD/ RHOSROBIN ROAD – PICADY RESULTS
6-4 B5425 LLAY NEW ROAD/ RHOSROBIN ROAD – ARCADY RESULTS

APPENDICES

A SCOPING RESPONSE FROM WREXHAM COUNTY BOROUGH COUNCIL
B SITE LAYOUT AND PARKING SCHEDULE
C GENERAL ACCESS ARRANGEMENT AND AUTOTRACK ANALYSIS
D STAGE 1 ROAD SAFETY AUDIT AND DESIGNERS RESPONSE
E TRAFFIC AND QUEUE LENGTH SURVEY DATA
F TRICS DATA
G DEVELOPMENT DISTRIBUTION – CENSUS TRAVEL TO WORK DATA
H PLAS ACTON ROAD/ B5425 LLAY NEW ROAD – PICADY MODEL OUTPUTS
I PLAS ACTON ROAD/ B5425 LLAY NEW ROAD – LINSIG MODEL OUTPUTS

J	**B5425 LLAY NEW ROAD/ RHOSROBIN ROAD – PICADY MODEL OUTPUTS**
K	**B5425 LLAY NEW ROAD/ RHOSROBIN ROAD – ARCADY MODEL OUTPUTS**

1.0 INTRODUCTION

1.1 Background

1.1.1 This Transport Assessment has been prepared by Cameron Rose Associates on behalf of SG Estates, in order to examine the highway and transportation issues associated with the proposed residential development, on land off Llay New Road, Rhosrobin, Wrexham.

1.1.2 The project would see the development of up to 92 residential dwellings served from the B5425 Llay New Road. The report will include an assessment of the proposed site access strategy and an analysis of the impact of development traffic on the local highway network.

1.1.3 The development site is located in Rhosrobin, to the north of Wrexham. The site is a parcel of open green land to the immediate east of the B5425 Llay New Road. To the north and east, the site is bounded by cemetery space. To the south, the site is bounded by residential properties located along Church Lea, along with the Wrexham-Chester rail line.

1.1.4 This Transport Assessment has been prepared to support the planning application for the proposed residential development and includes an analysis of the existing transport provision within the vicinity of the site, including sustainable transport facilities, traffic flows and the operation of the existing highway network. This assessment considers the adequacy of this existing provision to accommodate the future demands associated with the application proposals.

1.1.5 Details of the proposed pedestrian and vehicular access arrangements are set out in this report, together with a detailed assessment of the potential traffic impact of the development proposals on the surrounding local highway network.

1.1.6 The report has been prepared following scoping discussions with Wrexham County Borough Council (WCBC) as local Highway Authority. Correspondence received from WCBC, dated the 18th May 2021 is included in **Appendix A**.

1.1.7 This report concludes that the proposed development can be accommodated without detriment to the operational capacity or safety of the local highway network, with the mitigation measures proposed. The proposed residential development can also be accessed by sustainable modes of transport.

1.2 Structure

1.2.1 The structure of the report herein is set out as follows:

- **Section 2.0** considers the location of the development site, the local highway network and the existing infrastructure provision for sustainable modes of transport;
- **Section 3.0** sets out the details of the development proposals, site access and infrastructure proposals;
- **Section 4.0** presents the baseline conditions of the local highway network;
- **Section 5.0** deals with the future baseline conditions and also the potential trip generation of the proposed development and associated distribution methodology;
- **Section 6.0** considers the operational performance of the local highway network for a future assessment year, with the development in place;
- **Section 7.0** provides a summary and conclusion to the report derived from the analysis presented in the above chapters.

1.2.2 The report has been prepared solely in connection with the proposed development as stated above. As such, no responsibility is accepted to any third party for all or any part of this report, or in connection with any other development

2.0 THE DEVELOPMENT SITE

2.1 Site Location and Surrounding Area

2.1.1 The proposed residential development benefits from its strategic location in relation to the A483(T), Wrexham town centre and the local distributor routes of the B5425 Llay New Road, Rhosrobin Road and Plas Acton Road.

2.1.2 The proposed development includes the construction of 92 residential units, including access roads, parking areas and service provision. The development proposals are described in further detail in **Section 4.0**.

2.1.3 The site is a parcel of open green land to the immediate east of the B5425 Llay New Road. To the north and east, the site is bounded by cemetery space. To the south, the site is bounded by residential properties located along Church Lea, along with the Wrexham-Chester rail line. The location of the site in relation to the local highway network is illustrated in **Figure 2-1**.

Figure 2-1: Site Location

2.2 Local Highway Network

2.2.1 The study area, which was agreed with the Local Highway Authority during pre-application discussions, includes the following junctions surrounding the site:

- Plas Acton Road/ B5425 Llay New Road – priority controlled junction (consented scheme in place to upgrade to signal control); and
- B5425 Llay New Road/ Rhosrobin Road/ Site Access – roundabout (proposed);

2.2.2 The B5425 Llay New Road/ Main Road/ New Road serves as a local distributor route between the settlements of Wrexham to the south and Llay to the north. The B5425 forms the western boundary of the site and is subject to a 30 mph speed limit in the vicinity of the proposed development. To the north of the junction with B5425 Llay New Road/ Plas Acton Road, the B5425 is subject to a 50mph speed limit. A footpath/ cycleway is provided on the Gwersyllt side of Llay New Road, just beyond the Rhosrobin Road junction

2.2.3 Plas Acton Road forms a priority controlled junction with the B5425. Plas Action Road is subject to a 30 mph speed limit. Plas Acton Road/ Blue Bell Lane serves as a local distributor route through the local settlement of Pandy. To the south, Blue Bell Lane terminates at a grade separated roundabout, Junction 6 of the A483 (T).

2.2.4 In relation to the junctions that form the study area, an improvement scheme is consented at the junction of Plas Acton Road/ B5425 Llay New Road. The junction currently operates under priority control however under outline planning application P/2016/0189 the junction will be upgraded to signal control.

2.2.5 Outline planning application P/2016/0189 was submitted for residential development in 2016 and subsequently refused for a number of reasons, none of which were highways based. The application was then considered at appeal (app ref: APP/HY955/A/17/3182282). The Welsh Government endorsed the Inspector's decision to allow the appeal in June 2019 and grant planning consent for up to 189 residential dwellings, subject to a number of planning conditions. Condition 16 related to the Plas Acton Road/ B5425 Llay New Road junction, which states that:

No development shall take place until a scheme detailing the provision of a traffic controlled junction at the Llay New Road junction with Plas Acton Road has been submitted to and approved in writing by the local planning authority. The approved scheme shall be implemented prior to the occupation of the first dwelling hereby approved.

2.2.6 It is understood that at the time of writing this report, the Section 278 design process for the off-site works is ongoing with the relevant officers at the Council, to ensure that these works are progressed and in place.

2.2.7 In order to assess the operational performance of the local highway network, traffic counts, have been obtained from an independent traffic count undertaken on Thursday 4th September 2014 and Tuesday 14th September 2021, at the junctions within the study area.

2.3 Accessibility by Sustainable Modes

2.3.1 The proposal site is accessible by a number of non-car modes, providing real potential to reduce private car use. This section provides an appraisal of the existing sustainable transport network surrounding the development site, with due regard to the following:

- walking and cycling network;
- bus network; and
- rail infrastructure.

2.3.2 Non-car trips will be positively encouraged to/ from the proposed residential development through the Travel Plan, the development proposals include a wide range of facilities designed to encourage walking, cycling and public transport access to, from and within the site.

2.3.3 Consideration is given below to various sustainable modes of transport demonstrating that the site is in a sustainable location, consistent with Government policy objectives.

2.3.4 This section outlines the existing walking and cycling facilities, public transport services and describes the accessibility of the site in terms of its proximity to key services and destinations.

Walking and Cycling Network

2.3.5 The Institute of Highways and Transportation (IHT) document 'Providing for Journeys on Foot', identifies suitable walking distances to key facilities. The IHT document reports that approximately 80% of journeys on foot in urban areas are less than 1.6 kilometres (one mile). It provides a table of suggested acceptable walking distances, as follows:

Table 2-1: IHT Suggested Acceptable Walking Distances

	Town Centre (m)	Commuting/ School/ Sight-seeing (m)	Elsewhere (m)
Desirable	200	500	400
Acceptable	400	1,000	800
Preferred Maximum	800	2,000	1,200

2.3.6 **Figure 2.2** illustrates an 800 metre, 1,200 metre and 2,000 metre local catchments as measured from the access point of the proposed residential development. The analysis illustrates that Rhosrobin, Pandy and the parts of Gwersyllt falls within an acceptable local walking catchment and, as such, the site's proximity to the following local everyday services should be noted:

- Gwersyllt County Primary School;
- Gwersyllt Support Centre;
- Gwersyllt Rail Station;

- Local food and convenience shops; and
- A dental surgery.

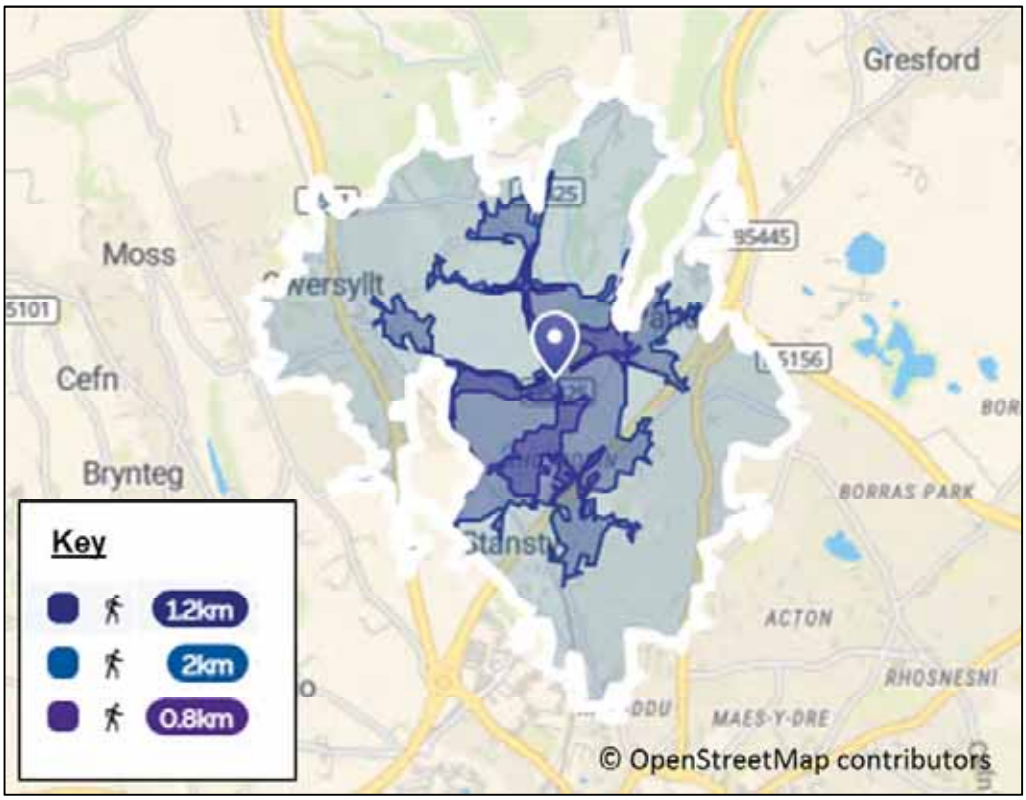

Figure 2-2: Walking Isochrone

2.3.7 In addition to walking connections, the pedal cycle has been identified as an acceptable travel mode for journeys of up to five kilometres. **Figure 2-3** illustrates the five kilometre cycle catchment from the site and demonstrated that Wrexham lies entirely within an appropriate cycle distance, along with the outlying areas of Gresford and Llay.

Figure 2-3: Cycling Isochrone

2.3.8 There are a number of Public Rights of Way (footpaths) in the vicinity of the site. **Figure 2-4** shows an extract of the Public Rights of Way plan in the vicinity of the proposed site. Footpaths are illustrated in purple.

Source: http://www.wrexham.gov.uk/english/leisure_tourism/prow/definitive_map.htm

Figure 2-4: Extract of Wrexham's Pubic Right of Way Map for Rhosrobin

2.3.9 Public Rights of Way operating through the site and illustrated in the above plan include:

- Footpath GWE/ 30 – This connects the B5425 Llay New Road to the west with Plas Acton Road to the east (approximate length of 350 metres).

As illustrated in the site layout plan, this route will be maintained as part of the development proposals, in the form of a 3.0 metre footpath/ cycleway.

2.3.10 **Figure 2-5** illustrates a number of on-road/ advisory cycle routes (purple routes) and a traffic free route (green route) in the vicinity of the site.

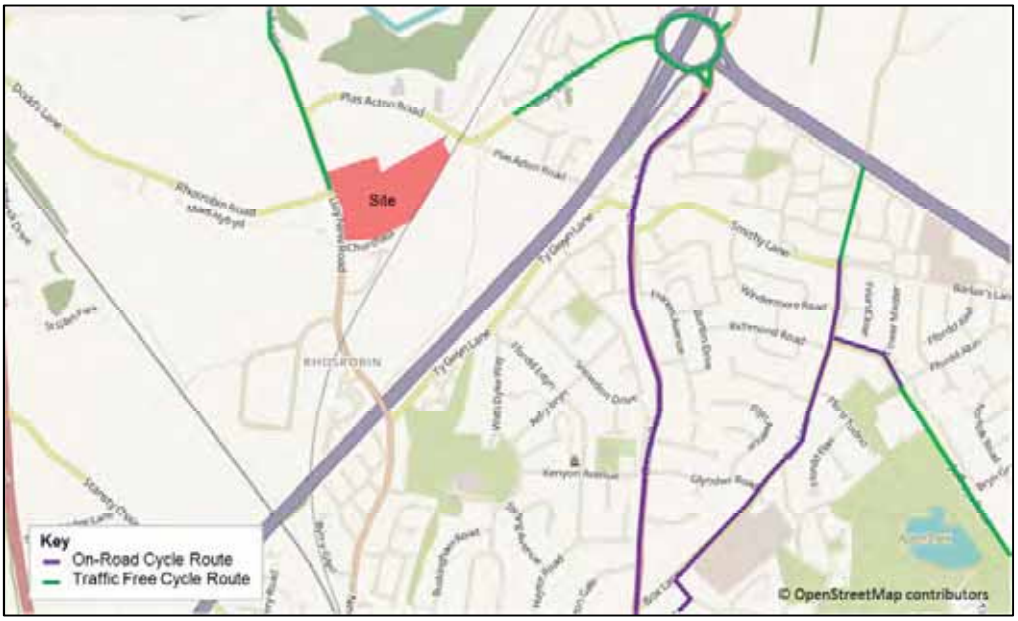

Source: www.sustrans.org.uk

Figure 2-5: Cycle Facilities in Close Proximity to the Site

2.3.11 Due to the urban location of the proposed development, the site benefits from a good network of high quality footways, surrounding the site. Street lighting is provided along all roads within the vicinity of the site, aiding pedestrian security and enhancing road safety. Dropped kerbs are also provided at all junctions for the convenience of pedestrians. The existing footways/ footpaths surrounding the development site ensure that the proposed development will have excellent connectivity to the local community facilities present in Rhosrobin and beyond.

Public Transport

Buses

2.3.12 Access to the site by public transport is excellent. Guidance published by the Institute of Highways and Transportation 'Planning for Public Transport in Developments' (1999) recommends that the maximum walking distance to a bus stop should be 400 metres, equating to an approximate five minute walk.

2.3.13 The site is within a 400 metre walking distance of a number of bus services. Bus stops are located on both side of the B5425 carriageway. The location of bus stops within close proximity to the site is illustrated in **Figure 2-6**. Services that operate along these routes are detailed in **Table 2-2**.

Figure 2-6: Bus Stop Locations in Close Proximity to the Site

Table 2-2: Bus Services and Headways

Service	Destination	Bus Headway (minutes)		
		Mon – Fri	Saturday	Sunday
X33/ 33	Wrexham - Llay via Rhosddu, Gwersyllt & Bradley	30 (hourly after 1830)	30 (hourly after 1830)	60
34	Wrexham –Trevalyn	3 services	3 services	-
PC2	Gatewen – Queenspark – Llay Industrial estatate	1 AM & 1 PM peak service	-	-

Source: http://planner.traveline-cymru.info/

2.3.14 The table demonstrates that there are a number of services operating within a 400 metre walking distance from the site, throughout the week and during weekends. These services provide connections into Wrexham, Mold and Flint. These destinations provide jobs, education, leisure, healthcare and many other community facilities. It should be noted that at the time of writing many bus services are operating at a reduced frequency due to the Coronavirus pandemic; historically service 33 has operated on a 20 minute frequency Monday to Saturday.

Rail

2.3.15 The closest railway station to the site is Gwersyllt Railway Station which is located approximately three kilometres from the site. Gwersyllt Railway Station is one of five stations located within Wrexham County Borough.

2.3.16 During weekdays and Saturdays the station offers an hourly service in each direction (southbound to Wrexham Central and northbound to Bidston). On Sundays the stations offers a service every 2.5 hours in each direction.

Travel Patterns and Key Destinations

Employment

2.3.17 Journey to work data from the 2011 Census (most recent data available) showed that for Rhosrobin residents, residing in the output area Wrexham 003 (W02000080), in excess of 31.0% of the working population travel over 5km to a place of work. **Table 2-3** below provides a full breakdown of the distance travelled to work statistics.

Table 2-3: Distance Travelled to Work Statistic

Distance Travelled	Percentage of Working Population
Works mainly at or from home	12.5%
Less than 2km	17.7%
2km to less than 5km	23.0%
5km to less than 10km	11.4%
10km to less than 20km	10.9%
20km to less than 30km	3.6%
30km to less than 40km	2.3%
40km to less than 60km	1.7%
60km and over	1.0%
No fixed place of work	15.7%

Source: 2011 Census

2.3.18 From the information above, it is conceivable that approximately 45% (including those with no fixed place of work for robustness) of the new residential population within the Rhosrobin area could travel via the strategic highway network during the traditional peak periods to area of employment in Flintshire, Wrexham, Chester and Ellesmere Port and Neston.

2.3.19 The location of the development site benefits from its close proximity to the A483 and the A5156, to access the above destinations.

Education

2.3.20 There are a number of primary schools located in close proximity to the proposed residential development, including Gwersyllt Community Primary, Plas Coch County Primary School and Wats Dyke County Primary School.

2.3.21 The closest secondary school to the proposed development is Ysgol Bryn Alyn.

Retail

2.3.22 There are a number of food and non-food retail units in close proximity to the proposed development including:

- the neighbourhood centre off Dodds Lane in Gwersyllt, which includes a Lidl, Iceland and Home Bargains and is located approximately 1.5km from the proposed development; and
- Plas Coch Retail Park off Plas Coch Road, which is includes an Aldi, Sainsbury's and Pets at Home and is located approximately 2.4km from the proposed development.

2.3.23 Wrexham town centre is a key retail destination for residents of Rhosrobin. Facilities include Eagles Meadow and the larger retailers including Debenhams, Marks and Spencer and Next.

Health

2.3.24 Existing health facilities in close proximity to the proposed development include a dental surgery at Dodds Lane Neighbourhood Centre, the GP Surgery at Plas Coch Campus on Mold Road, opticians on Croesnewydd Road and pharmacies on Chester Road and Rhosddu Road.

2.3.25 The closest hospital to the proposed development site is Wrexham Maelor Hospital, which has a 24-hour A&E department and is located approximately 3.4 kilometres from the proposed development.

Leisure and Community Facilities

2.3.26 The majority of leisure facilities are located in Wrexham town centre. These include Waterworld (swimming pool), libraries and museums, in addition to cinemas and bowling alleys.

2.4 Summary

2.4.1 Overall it is evident that the site is accessible to pedestrians, cyclists and users of public transport. The proposed residential development will include measures to promote the use of such sustainable modes of transport.

3.0 THE PROPOSED DEVELOPMENT

3.1 Site Layout

3.1.1 The application site covers an area of some 11.646 acres (4.713 Ha) and the net developable area is 7.280 acres (2.946 Ha). The site is a parcel of open green land to the immediate east of the B5425 Llay New Road. To the north and east, the site is bounded by cemetery space. To the south, the site is bounded by residential properties located along Church Lea, along with the Wrexham-Chester rail line.

3.1.2 The site layout is included in **Appendix B** and indicates that the site could accommodate up to 92 residential units, at a net density of approximately 31.228 dwellings per hectare. The residential dwellings will include 23 affordable dwellings.

3.1.3 Access to the development site is proposed to be taken via a new four arm roundabout junction, replacing the existing three arm priority controlled T-junction of Rhosrobin Road with the B5425 Llay New Road..

3.1.4 The transportation impacts of these proposals are considered later in this report. The site layout is contained within **Appendix B**.

3.2 Access and Movement Strategy

3.2.1 A comprehensive transport access and movement strategy has been developed for the proposed residential development site. The site layout indicates that the site will be accessed via a new four arm roundabout junction, replacing the existing three arm priority controlled T-junction of Rhosrobin Road with the B5425 Llay New Road. The proposed access drawing is contained within **Appendix C**.

3.2.2 An ATC was installed in the vicinity of the proposed site access on the B5425 Llay New Road. The ATC was installed for a 7-day period between the dates of 9th September to 15th September 2021. The results of the analysis demonstrate the following average and 85th percentile speed:

- Northbound:
  - Average – 28.4 mph; and

- 85th percentile – 33.2 mph.

- Southbound:
  - Average – 28.6 mph; and
  - 85th percentile – 34.0 mph.

3.2.3 The compact roundabout scheme has been designed in accordance with the national standards described in DMRB 5.2.3 TD16/07 'Geometric Design of Roundabouts'. A Stage 1 Road Safety Audit of the roundabout junction scheme has also been undertaken the findings of which are attached in **Appendix D** along with the associated Designer's Response document.

3.2.4 Internally the site and access route would continue onwards to form a number of cul-de-sac terminations. The main site access spine route will be of a 5.5 metre width design, in accordance with current WCBC guidance and is considered suitable to accommodate the additional traffic movements associated with the development site.

3.2.5 The footpath connections on the site facilitate easy and convenient access to bus stops. The existing public footpath crossing the site will be upgraded to a 3.00 metre wide footpath/ cycleway; providing a link to the footpath/ cycleway on the Gwersyllt side of Llay New Road.

3.2.6 Thus the overall philosophy for the design of the movement networks across the site will be to provide high quality and convenient connections for and to sustainable transport modes, to maximise the potential for travel making on foot, by bike and by public transport.

3.2.7 The design of the vehicular access routes will maximise the permeability of the site and will connect into the existing surrounding highway networks.

3.3 Proposed Parking Provision

3.3.1 The car parking standards set out in Wrexham's Local Planning Guidance Note No. 16 are maximum standards for each land use category. In accordance with national policy the Council has no minimum parking requirements. The document states that

'*in cases where the amount of parking provided is below the maximum the Council will need to be satisfied that this is appropriate for the likely level of demand, without undermining requirements for inclusive access'*.

3.3.2 It expands on this by stating that:

'Where developments are close to local services and facilities and/or are in areas where people are able to walk or cycle to them or travel to them easily by public transport, it may be appropriate for less on-site parking to be provided than for developments in remoter areas'.

'In areas where people can easily travel to sites by means other than by car, reducing the amount of space dedicated to car parking could allow land to be used more efficiently by enabling a higher density development or to provide landscaping to enhance the appearance of an area'.

3.3.3 As stated in the previous section, it is evident that the development is accessible to pedestrians, cyclists and users of public transport. Bus stops are located on the B5425 Llay New Road within 400 metres of the site and there are numerous local facilities located with an acceptable walking and cycling distance of the site. It is therefore considered that providing parking below the maximum parking standards stated below is justified.

3.3.4 The maximum residential car parking standards, as set out in Wrexham's Local Planning Guidance Note No. 16, state the following car parking requirements:

- One bedroom dwellings – 1.5 car parking space per unit;
- Two bedroom dwellings – two car parking spaces per unit;
- Three/ four bedroom dwellings – three car parking spaces per unit; and
- Five bedroom dwellings – four car parking spaces per unit.

The parking standards state that garages will not be counted as car parking spaces.

3.3.5 Parking provision for the proposed residential development is detailed in **Table 3-1**. More details are provided in **Appendix B.**

Table 3-1: Proposed Parking Provision

No. of Bedrooms	No. of Units	Policy Standards	No. of Car Parking Spaces Proposed per unit
1	12	1.5	1.75
2	18	2	2
3	1	3	3 + Garage
	20	3	2 + Garage
4	12	3	3 + Garage
	27	3	2 + Garage
5	2	4	2 + Garage

3.3.6 There are an additional 14 visitor car parking spaces across the site, the location of which is illustrated in **Appendix B**.

4.0 BASELINE TRAFFIC CONDITIONS

4.1 Introduction

4.1.1 This section provides an appraisal of the transport network surrounding the proposed development site, including the baseline traffic flows on the study area network and an analysis of accident records for the local highway network.

4.1.2 At the request of Wrexham County Borough Council, the study area includes an analysis of the following junctions:

- Plas Acton Road/ B5425 Llay New Road – priority controlled junction (consented signal control); and
- B5425 Llay New Road/ Rhosrobin Road/ Site Access – roundabout (proposed).

4.1.3 The following sections therefore present the methodology adopted to establish baseline conditions within the agreed study area.

4.2 Baseline Traffic Flows

4.2.1 Peak hour traffic flows for the junction of the B5425 Llay Road with Rhosrobin Road have been derived from independent manual turning counts undertaken by PCC Traffic Information Consultancy on Thursday 4 September 2014.

4.2.2 Surveys were undertaken for a Weekday AM (0730 – 1000) and PM (1600 – 1830) peak periods. Analysis of the data determined that the peak hours were 0800 - 0900 during the AM peak and 1630 - 1730 during the PM peak.

4.2.3 Peak hour traffic flows at the junction of Plas Acton Road junction with B5425 Llay Road have been derived from independent manual turning counts undertaken by Road Data Services Limited on Tuesday 14th September 2021.

4.2.4 Surveys were undertaken for a Weekday AM (0730 – 1000) and PM (1600 – 1830) peak periods. Analysis of the data has determined that as with the 2014 surveys, the peak hours are 0800 - 0900 during the AM peak and 1630 - 1730 during the PM peak.

4.2.5 An ATC was also placed on the B5425 Llay Road in the vicinity of its junction with Rhosrobin Road. The ATC recorded traffic count and speed data for a seven day period between 9th September 2021 and 15th September 2021.

4.2.6 The full survey results are attached in **Appendix E**. The resulting turning flows at the junction are illustrated in **Figure 4-1**.

4.3 Assessment Years

4.3.1 The base traffic has been growthed for assessment to a design year five years after application registration, 2026.

4.3.2 Growth factors will be applied to the 2014 and 2021 surveyed traffic flows to calculate 2026 base traffic flows. This will be undertaken using TEMPRO 7 NTM AF15 Dataset with adjusted local growth for the Wrexham 003 super output area (E020000080), which encompasses the development site. The resulting growth factors for the AM and PM peak periods are shown in **Table 4-1**.

Table 4-1: Growth Factors (Wrexham 003)

Assessment Years	AM Peak Hour	PM Peak Hour
2014 – 2021	1.0889	1.0882
2021 - 2026	1.0580	1.0587

4.3.3 The growth factors presented above, have been applied to the surveyed traffic flows. **Figure 4-1** illustrates the 2014 survey traffic flows, **Figure 4-2** illustrates the 2021 baseline traffic flows and **Figure 4-3** illustrates the 2026 base traffic flows.

4.3.4 The ATC data has been used to establish the accuracy of the 2014 survey data with the application of growth to a 2021 assessment year. The results demonstrate that the growthed data overestimates traffic flows and is therefore considered to be robust for the proposed site access junction assessments.

4.4 Committed Development Traffic Flows

4.4.1 The following committed developments have been taken into consideration in the assessment:

- P/2014/0905 - Outline Application For 365 Dwellings And Erection Of 300 Square Metre Retail Unit - All Detailed Matters Reserved; and

- P/2016/0189 - Outline Application For Residential Development (Up To 189 Dwellings) With All Matters Reserved Except For Access.

4.4.2 The development traffic flows associated with each of the schemes has been taken from the Transport Assessments that accompanied the application. The committed development is summarised in **Figure 4-4** and **Figure 4-5**. The 2026 Base plus Committed Development traffic flows are summarised in **Figure 4-6**.

4.5 Personal Injury Accident Data

4.5.1 Personal Injury Accident data has been obtained from the Crash Map website (www.crashmap.co.uk) for the proposed study area for the most recent five year period for which data is complete (from the time of reviewing). The collisions have been reviewed in **Table 4-2**.

Table 4-2: Summary of Personal Injury Collisions

Location	Slight	Serious	Fatal
Plas Acton Road/ B5425 Llay New Road	3	0	0
B5425 Llay New Road – adjacent to the site	0	0	0
Total	**3**	**0**	**0**

4.5.2 In total for the study area under consideration three personal injury accidents were recorded. All accidents were recorded as slight in severity.

4.5.3 One of the accidents recorded at the Plas Acton Road/ B5425 Llay New Road junction, resulted from a rear shunt collision between two cars. The conditions recorded at the time of the collision were wet and dark.

4.5.4 One accident resulted from a nearside/ offside collision between a car and van. At the time of the collision the van was moving off and the car was proceeding normally along the carriageway. The conditions recorded at the time of the collision were dry and light.

4.5.5 One accident resulted from a collision between two cars. At the time of the collision one car was undertaking a right turn manoeuver and one was proceeding normally along the carriageway. The conditions recorded at the time of the collision were dry and light.

Figure 4-7: Personal Injury Collision Locations

4.5.6 The personal injury accident data would suggest that there is no particular trend or pattern of road accidents in the vicinity of the site resulting from any deficiencies in the local road network, or the operation of the site.

5.0 FUTURE TRAFFIC CONDITIONS

5.1 Overview

5.1.1 This section provides details of the modelling methodology adopted to assess the impact of the development proposals on the local highway network including details of the trip generation and associated vehicle distribution of the proposed residential development.

5.2 Proposed Residential Development Vehicle Trip Generation

5.2.1 The proposed residential development will consist of up to 92 residential units, comprising a mix of affordable and privately owned dwellings. It has been assumed for the purpose of this assessment that all units will be privately owned houses. This will ensure that the assessment is robust.

5.2.2 The traffic generation of the proposed residential development has been estimated on the basis of comparable survey data contained within the TRICS database. Survey data for private residential houses has been used to assess the likely traffic generation of the proposed development.

5.2.3 As requested by Wrexham County Borough Council, 85th percentile trip rates have been used in the assessments. The trip rates are summarised below in **Table 5-1**, the full calculation and output from TRICS is attached in **Appendix F**.

Table 5-1: Proposed Residential Development Vehicle Trip Rates

Unit	Peak Period	Arrivals	Departures	Two-Way
Per Dwelling	AM Peak (0800 – 0900)	0.174	0.548	0.722
	PM Peak (1700 – 1800)	0.426	0.271	0.696

5.2.4 The quantum of traffic generated by the proposed residential development has been calculated for the upper limit i.e. 92 residential units and is summarised in **Table 5-2**.

Table 5-2: Vehicular Trip Generation (92 units)

Units	Peak Period	Arrivals	Departures	Two-Way
92 Dwellings	AM Peak (0800 – 0900)	16	50	66
	PM Peak (1700 – 1800)	39	25	64

5.2.5 The trip generation of the proposed residential development is anticipated to be 66 two-way trips in the Weekday AM peak hour and 64 in the Weekday PM peak hour.

5.3 Trip Distribution and Assignment

5.3.1 A trip distribution was derived using Journey to Work Statistics obtained from the 2011 Census for the Gwersyllt East and South ward, of which the proposed development will form part of. The resulting distribution is included in **Table 5-3**. The raw data is included in **Appendix G.**

Table 5-3: Proposed Development Distribution by Local Authority

Local Authority	Proportion of Development Traffic	Proposed Route
Wrexham	70.1%	Based on existing turning proportions
Flintshire	11.0%	10.0% via B5425 N and 1.0% via A483 N
Chester	8.7%	A483 N
Denbighshire	1.6%	0.4% via A483 S & 1.2% via B5425 N
Wirral	0.5%	A483 N
Liverpool	0.4%	A483 N
Vale Royal	0.4%	B5425 N
Oswestry	1.4%	A483 S
Halton	0.3%	A483 N
Gwynedd	0.1%	A483 S
Other	5.5%	Based on existing turning proportions

NB: Updated to reflect 2011 Census data

5.3.2 **Table 5-4** summarises the distribution of the proposed development via proposed travel route.

Table 5-4: Proposed Development Distribution by Route

Proposed Route	Proportion of Development Traffic
Plas Acton Road towards A483	12.8%
B5425 N	11.6%
Turning Proportions	75.6%

5.3.3 The resulting distribution is illustrated in **Figure 5-1**. The assignment of development traffic illustrated in **Figure 5-2**. The 2026 base plus committed plus development traffic flows are illustrated in **Figure 5-3**.

6.0 IMPACT OF DEVELOPMENT PROPOSALS ON THE OPERATIONAL PERFORMANCE OF THE LOCAL HIGHWAY NETWORK

6.1 Junction Capacity Assessments

6.1.1 Capacity assessments have been undertaken for a Weekday AM and PM peak period. Assessments have been undertaken for the following junctions, as agreed with Wrexham County Borough Council, using the software noted:

- Plas Acton Road/ B5425 Llay New Road – PICADY and LINSIG; and
- B5425 Llay New Road/ Rhosrobin Road/ Site Access – ARCADY;

6.1.2 ARCADY and PICADY uses the geometry of the junction combined with traffic flow information to predict capacity. The software provides a number of results in its output, including Ration of Flow to Capacity (RFC), where an RFC of 1.00 reflects a demand equal to the theoretical capacity of the junction approach.

6.1.3 LINSIG presents results as a percentage Degree of Saturation (DoS) and corresponding likely traffic queues for each modelled link at the junction. For Traffic Signals it is generally accepted that a Degrees of Saturation (DoS) of 90% or less on individual links represent satisfactory signal operation.

Plas Acton Road/ B5425 Llay New Road

6.1.4 An improvement scheme is proposed at the junction of Plas Acton Road/ B5425 Llay New Road in association with planning application P/2016/0189 - Land East Of Tan Y Bont, Main Road, Old Rhosrobin, Rhosrobin, Wrexham, LL11 4RL - Outline application for residential development (up to 189 dwellings) with all matters reserved except for access. The improvement scheme includes the implementation of traffic signal controls at the junction. At the time of writing this report, the condition associated with scheme has not been discharged, however it is understood that the Section 278 detail design is progressing. The proposed signal improvement scheme is enclosed in **Appendix I**.

6.1.5 The results of the PICADY for the 2021 assessments are set out in **Appendix H** and summarised in **Table 6-1**. The results of the LINSIG assessment for the improvement scheme are set out in **Appendix I** and summarised in **Table 6-2**.

Table 6-1: Plas Acton Road/ B5425 Llay New Road – PICADY Results

Scenario	Arm	AM Peak Hour		PM Peak Hour	
		RFC	Queue	RFC	Queue
2021 Base	Plas Acton Road – right	0.39	1	0.32	1
	Plas Acton Road – left	0.52	1	0.58	1
	B5425 Llay New Road (s) - right	0.35	1	0.37	1

Table 6-2: Mitigation - Plas Acton Road/ B5425 Llay New Road – LINSIG Results

Scenario	Arm	AM Peak Hour		PM Peak Hour	
		DoS	Queue	DoS	Queue
2026 Base + Committed Development	B5425 Llay New Road (n) Ahead Left	62.9%	8.3	45.8%	5.2
	Plas Acton Road Right Left	60.4%	5.8	64.0%	6.1
	B5425 Llay New Road (s) Ahead Right	55.2%	4.4	63.0%	8.1
	Practical Reserve Capacity	43.0%		40.6%	
2026 Base + Committed Development + Development	B5425 Llay New Road (n) Ahead Left	63.3%	8.4	46.5%	5.3
	Plas Acton Road Right Left	60.9%	5.9	64.7%	6.3
	B5425 Llay New Road (s) Ahead Right	59.5%	4.9	63.7%	8.2
	Practical Reserve Capacity	42.1%		39.0%	

6.1.6 The results of the analysis demonstrate that the proposed signalisation will result in the junction operating with a positive practical reserve capacity during all peaks and scenarios. The maximum DoS was recorded during the 2026 Base plus Development PM peak scenario on Plas Acton Road with a DoS of 64.7% with an associated queue of six pcus. Analysis of the queue graphs within the model demonstrates that the queue clears during the green period.

6.1.7 The model demonstrates that the proposed signals at the junction can accommodate the proposed development alongside committed development traffic flows and background traffic growth.

6.1.8 Overall, it is concluded that with the improvement measures in place, the development traffic would not have a material impact upon the operation of the junction as a whole. The improvement measures proposed would improve the junction's operation capacity performance, compared to the existing base layout.

B5425 Llay New Road/ Rhosrobin Road

6.1.9 The site layout indicates that the site will be accessed via a new four arm roundabout junction, replacing the existing three arm priority controlled T-junction of Rhosrobin Road with the B5425 Llay New Road. The priority arrangement is assessed below for the base scenarios and the proposed roundabout option for the with development scenario.

6.1.10 The results of the PICADY and ARCADY assessment are set out in **Appendix J** and **Appendix K** and summarised in **Table 6-3** and **Table 6-4**.

Table 6-3: B5425 Llay New Road/ Rhosrobin Road – PICADY Results

Scenario	Arm	AM Peak Hour		PM Peak Hour	
		RFC	Queue	RFC	Queue
2014 Survey	Rhosrobin Road - right	0.22	0	0.18	0
	Rhosrobin Road - left	0.64	2	0.56	1
	B5425 Llay New Road (n) - right	0.14	0	0.27	0
2021 Base	B5425 Llay New Road (s)	0.29	0	0.23	0
	Rhosrobin Road	0.74	3	0.67	2
	B5425 Llay New Road (n)	0.16	0	0.31	1
2026 Base plus Committed	B5425 Llay New Road (s)	0.64	2	0.75	2
	Rhosrobin Road	0.89	6	0.90	6
	B5425 Llay New Road (n)	0.18	0	0.36	1

6.1.11 The results of the operational capacity assessment for the 2026 base plus committed development scenario, demonstrate that the junction will be experiencing queues building up at the junction and increases in vehicular delay moving through the junction.

6.1.12 The maximum RFC was recorded during the 2026 Base plus Committed PM peak scenario on Rhosrobin Road with an RFC of 0.90 with an associated queue of six pcus.

Table 6-4: B5425 Llay New Road/ Rhosrobin Road – ARCADY Results

Scenario	Arm	AM Peak Hour		PM Peak Hour	
		RFC	Queue	RFC	Queue
2026 Base plus Committed plus Development	B5425 Llay New Road (s)	0.53	1	0.88	7
	Rhosrobin Road	0.38	1	0.37	1
	B5425 Llay New Road (n)	0.91	9	0.67	2
	Site Access	0.11	0	0.03	0

6.1.13 The operational capacity assessments of the proposed site access demonstrate that during the AM and PM peak, with the development traffic the junctions will operate within its practical capacity. The maximum RFC occurs during the AM peak on B5425 Llay New Road (n) of 0.91, with an associated queue of nine pcus.

6.1.14 The modelling demonstrates that the proposed site access is sufficient to accommodate development traffic. The robustness of the traffic data used in the assessment should also be noted.

6.2 Summary

6.2.1 The junction capacity assessments undertaken indicate that the junctions considered on the local highway network, will continue to operate within acceptable capacity limits for a future assessment year, following the development of the site, with the proposed mitigation measures in place.

7.0 SUMMARY AND CONCLUSIONS

7.1 Summary

7.1.1 This report has examined the highway and transportation matters associated with the proposed residential development on land off Llay New Road, Rhosrobin, Wrexham. A planning application is being submitted, which seeks consent for up to 92 dwellings on site.

7.1.2 The site layout indicates that the site will be accessed via a new four arm roundabout junction, replacing the existing three arm priority controlled T-junction of Rhosrobin Road with the B5425 Llay New Road. The compact roundabout scheme has been designed in accordance with the national standards described in DMRB 5.2.3 TD16/07 'Geometric Design of Roundabouts'.

7.1.3 An appraisal of the accessibility of the site by sustainable travel modes and access to key services has been undertaken. This appraisal has concluded that a range of key facilities and services, including employment, retail, health and education uses, are readily accessible from the site. Many of these can be accessed locally, on foot or by bike. Other facilities are available in Wrexham, Mold and Flint via the existing frequent bus services which run adjacent to the site. It is therefore concluded that the location of the site is consistent with national and local transport policy and guidance.

7.1.4 The assessment has included an appraisal of the baseline transport conditions within the vicinity of the site. This has included analysis of the surrounding highway network, baseline traffic flows on the study area network, accident records for the local road network and baseline capacity assessments of junctions within the study area.

7.1.5 This analysis shows that with the exception of the junction of Plas Acton Road/ B5425 Llay New Road the surrounding highway network operates within its capacity and the personal injury accident records have not identified any significant safety concerns associated with the adjacent network.

7.1.6 An improvement scheme is proposed at the junction of Plas Acton Road/ B5425 Llay New Road in association with planning application P/2016/0189 - Land East Of Tan Y Bont, Main Road, Old Rhosrobin, Rhosrobin, Wrexham, LL11 4RL - Outline application for residential development (up to 189 dwellings) with all matters reserved except for access. The improvement scheme includes the implementation of traffic signal controls at the junction. At the time of writing this report, the condition associated with scheme has not been discharged. The results of the impact analysis demonstrate that the improved junction form would have sufficient capacity to accommodate forecast traffic levels up to 2026 and beyond.

7.2 Conclusions

7.2.1 This report has demonstrated how the proposed development promotes accessibility by all modes of travel, in particular public transport, cycling and walking by virtue of its sustainable location and the physical infrastructure that would be put in place, as well as the Travel Plan which would be used to influence travel behaviour.

7.2.2 The impacts of residual trips from the proposed development have been assessed and it is evident that these would not have a significant impact on the operational performance and safety of the local highway network.

7.2.3 It is concluded that there are no overriding reasons preventing the Local Planning Authority from recognising that the proposal is acceptable with regard to the local highway network.

CAMERON ROSE
ASSOCIATES

FIGURES

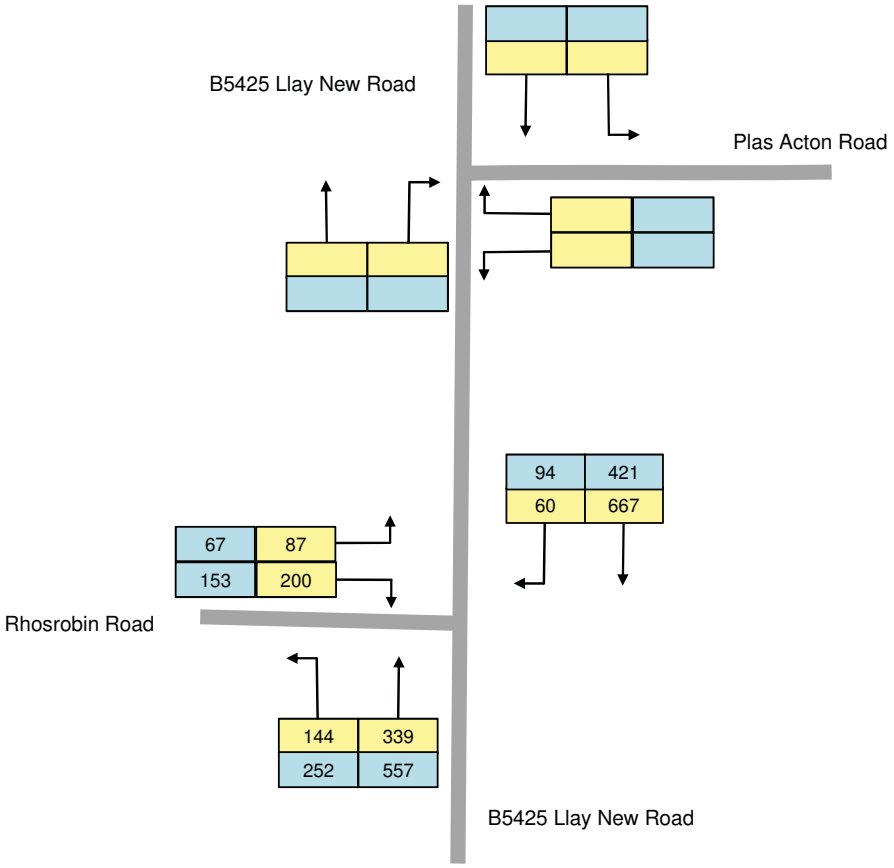

Key

Weekday AM Peak hour (0745 - 0845)

Weekday PM Peak hour (1645- 1745)

CAMERON ROSE ASSOCIATES

2014 Survey Traffic Flows

Figure 4-1

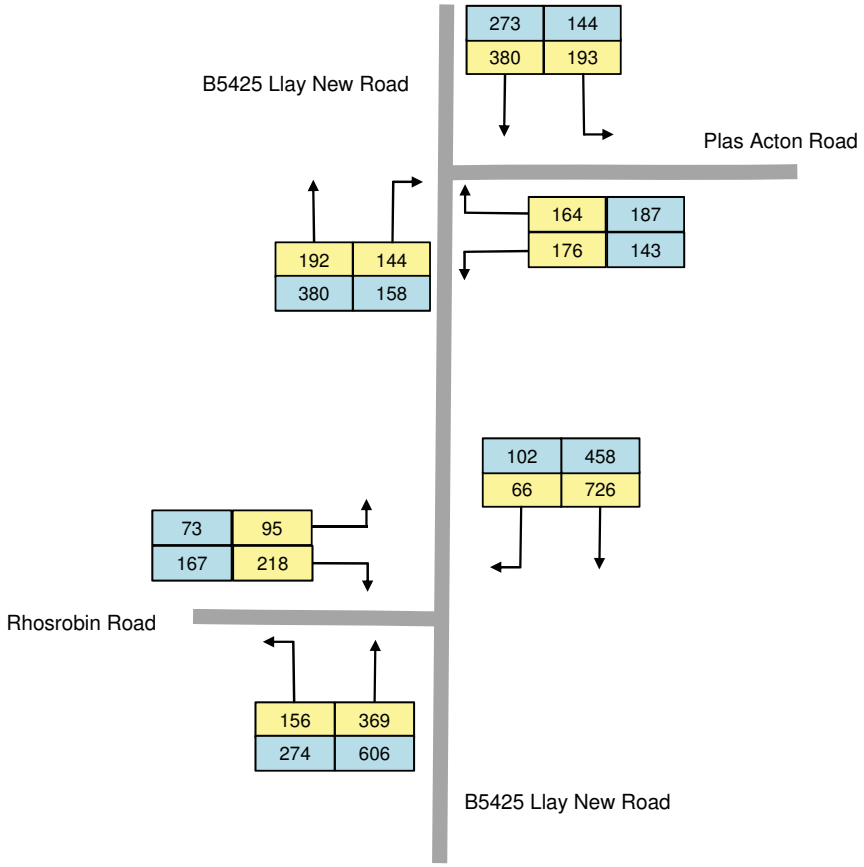

Key

Weekday AM Peak hour (0745 - 0845)

Weekday PM Peak hour (1645- 1745)

CAMERON ROSE ASSOCIATES

2021 Base Traffic Flows

Figure 4-2

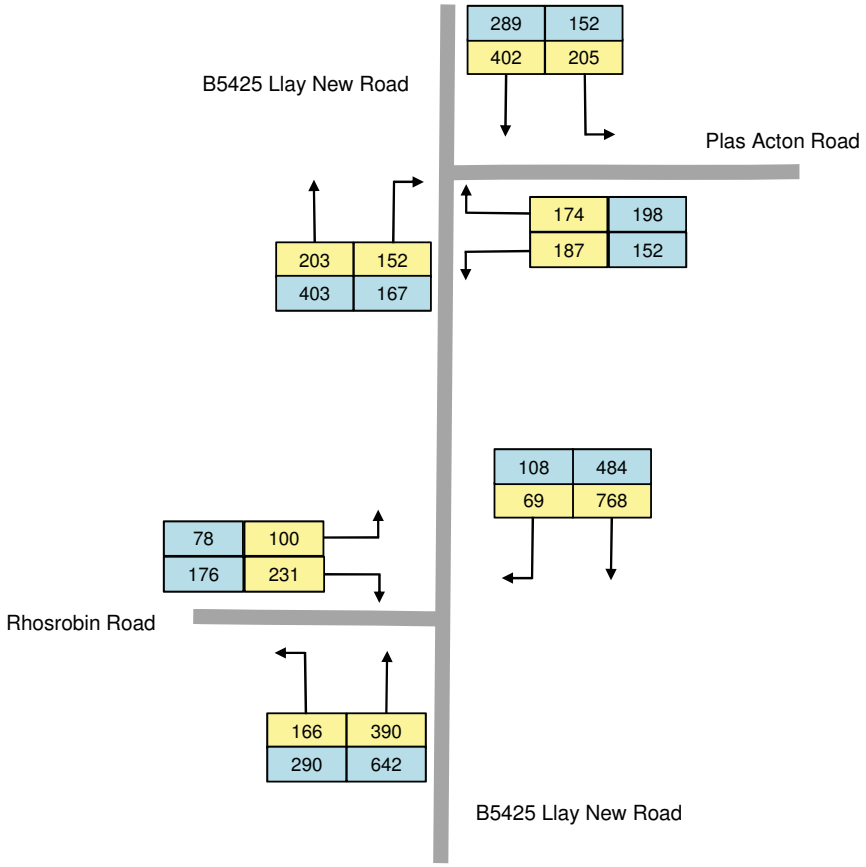

Key

Weekday AM Peak hour (0745 - 0845)

Weekday PM Peak hour (1645- 1745)

CAMERON ROSE ASSOCIATES

2026 Base Traffic Flows

Figure 4-3

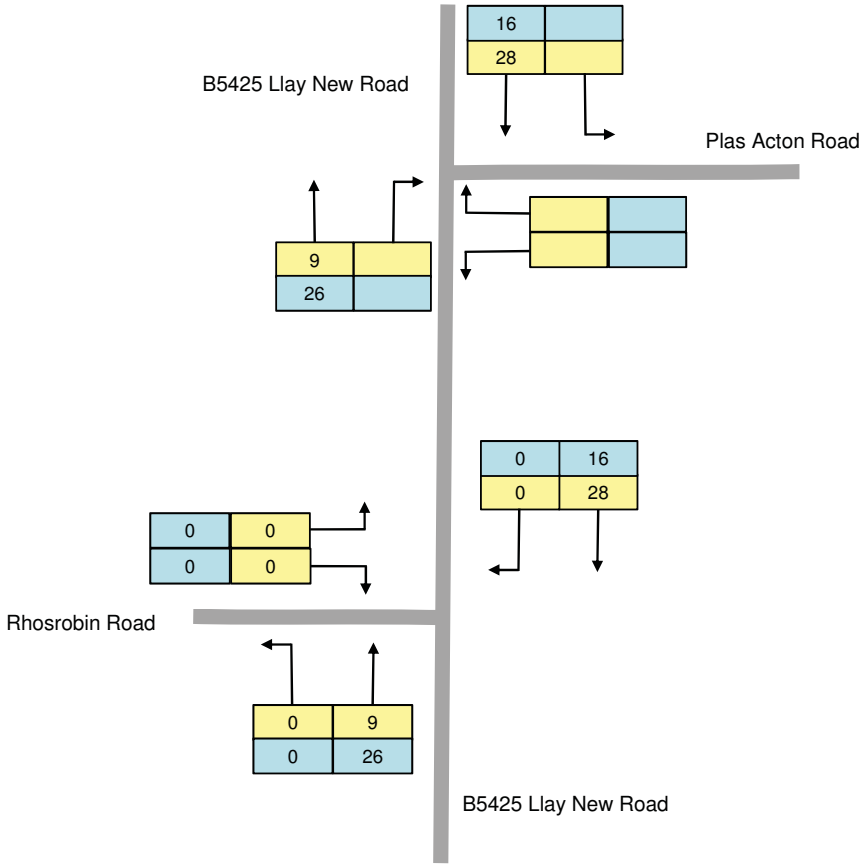

Key

Weekday AM Peak hour (0745 - 0845)

Weekday PM Peak hour (1645- 1745)

CAMERON ROSE ASSOCIATES	Committed Development P/2014/0905 - Outline Application For 365 Dwellings And Erection Of 300 Square Metre Retail Unit - All Detailed Matters Reserved	Figure 4-4

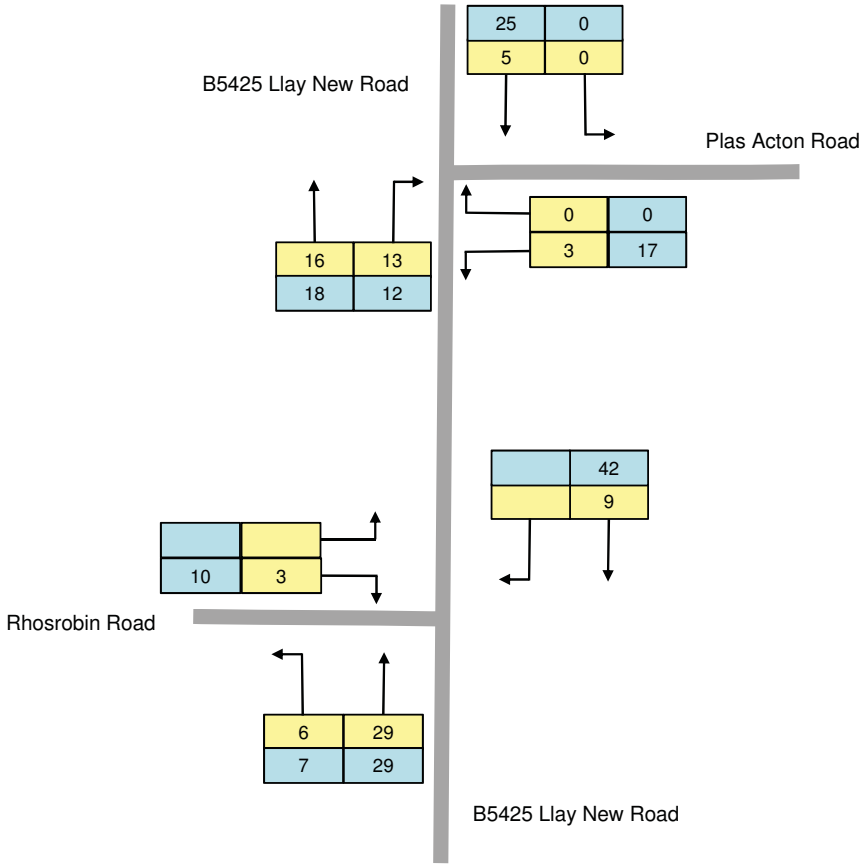

Key

Weekday AM Peak hour (0745 - 0845)

Weekday PM Peak hour (1645- 1745)

CAMERON ROSE ASSOCIATES

Committed Development P/2016/0189 - Outline Application For Residential Development (Up To 189 Dwellings) With All Matters Reserved Except For Access

Figure 4-5

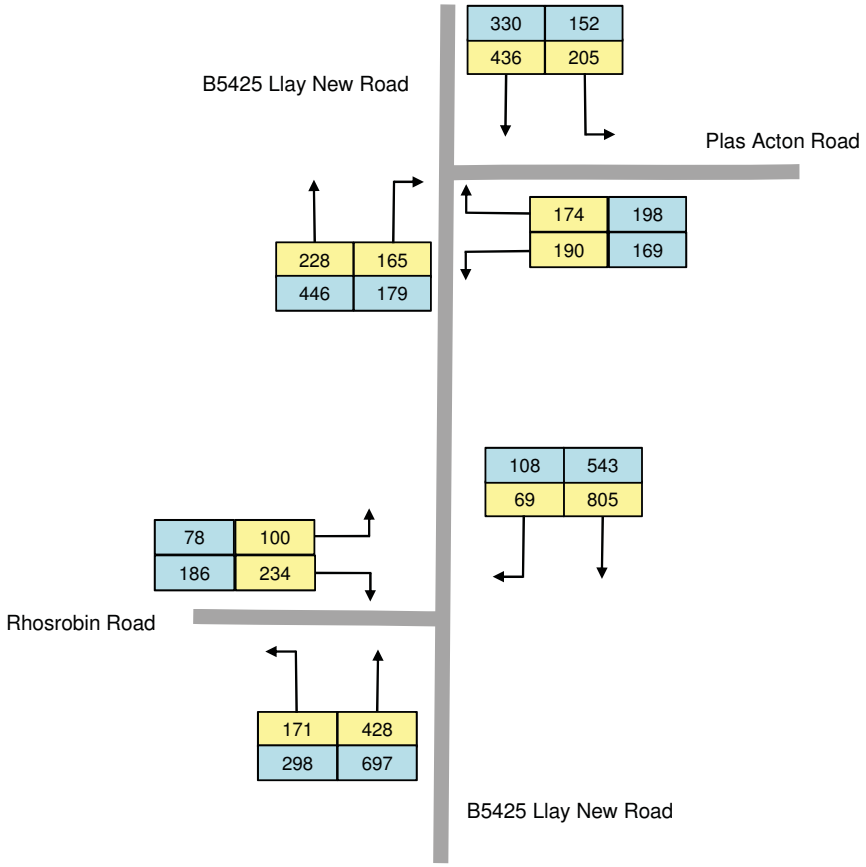

Key

Weekday AM Peak hour (0745 - 0845)

Weekday PM Peak hour (1645- 1745)

CAMERON ROSE ASSOCIATES

2026 Base plus Committed Development Traffic Flows

Figure 4-6

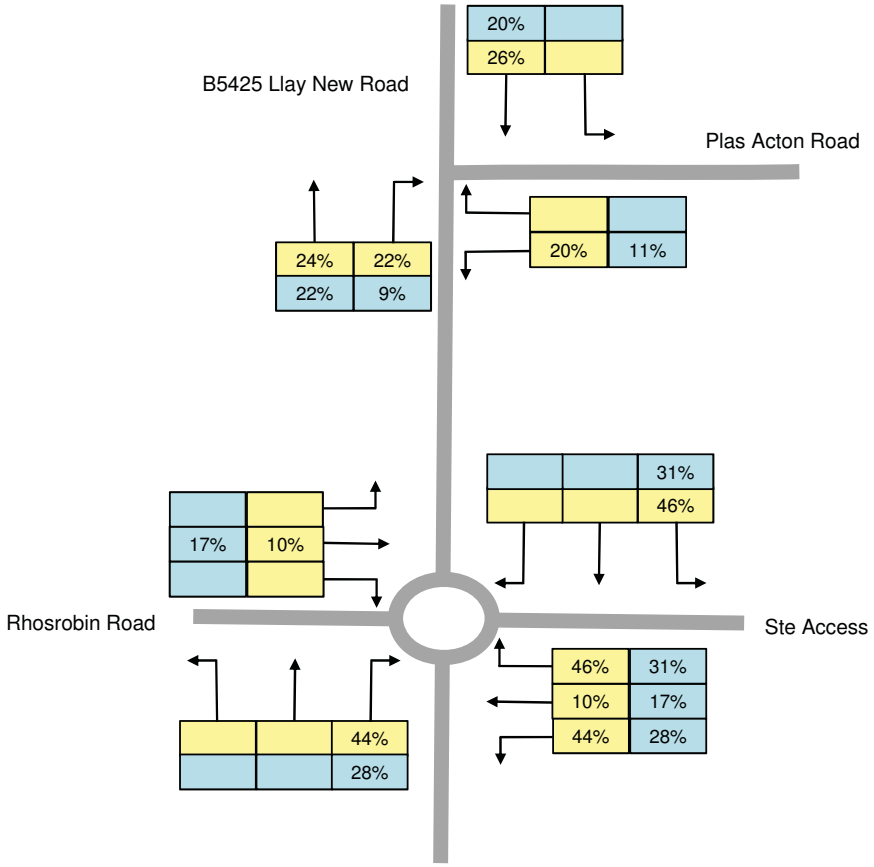

Key

Weekday AM Peak hour (0745 - 0845)

Weekday PM Peak hour (1645- 1745)

CAMERON ROSE ASSOCIATES

Development Distribution

Figure 5-1

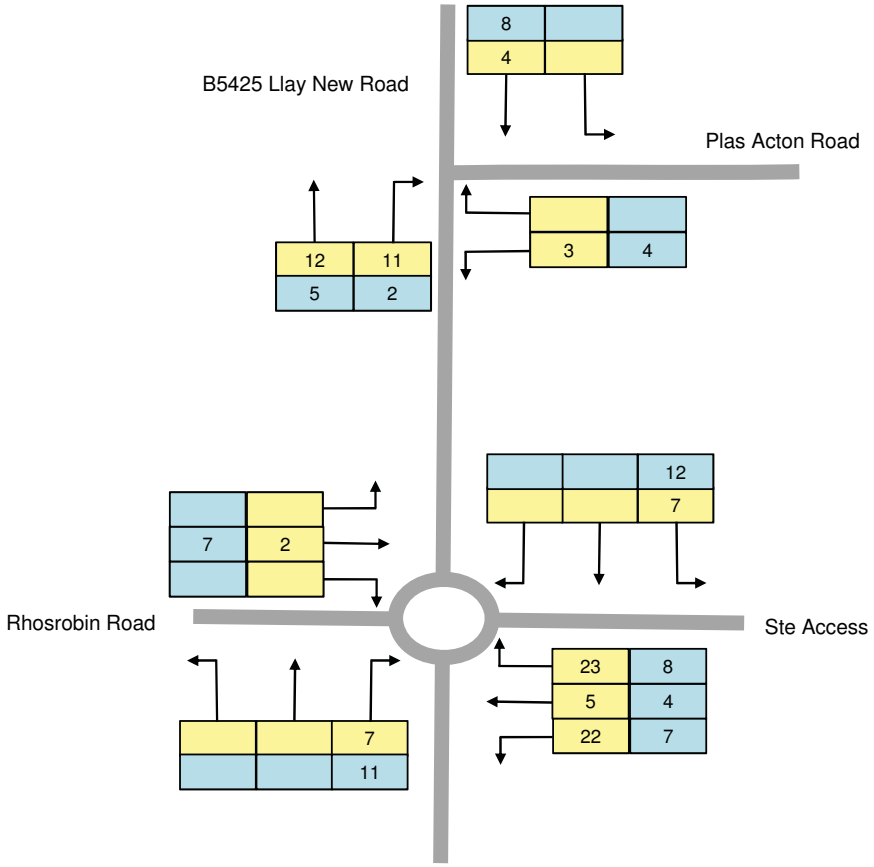

Key

Weekday AM Peak hour (0745 - 0845)

Weekday PM Peak hour (1645- 1745)

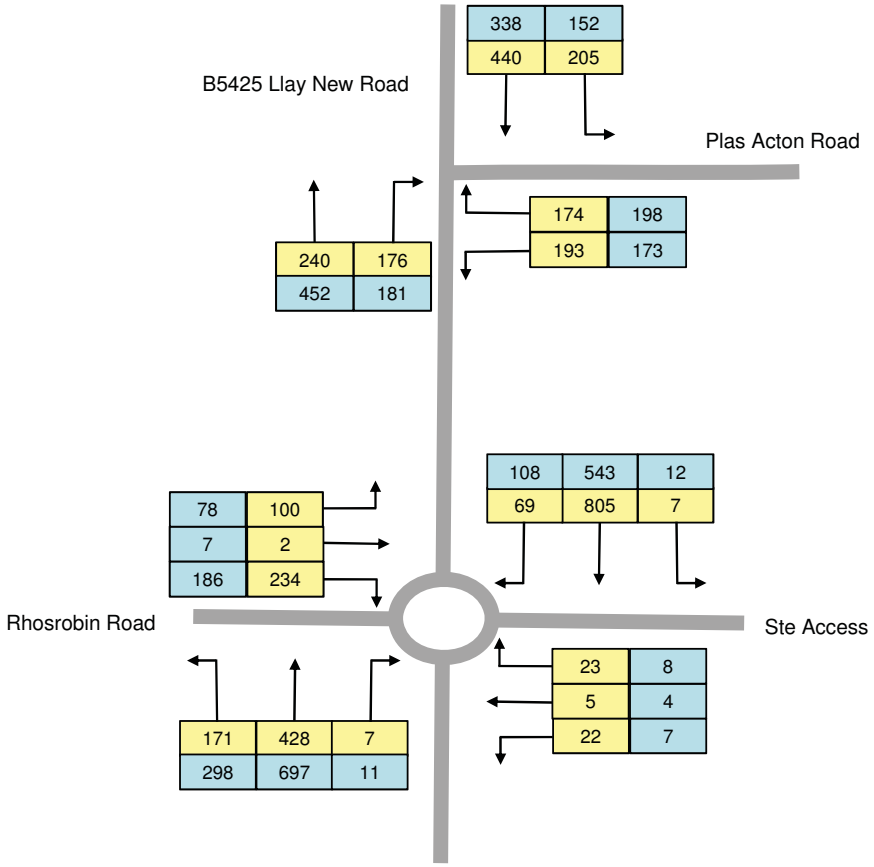

Key

Weekday AM Peak hour (0745 - 0845)

Weekday PM Peak hour (1645- 1745)

CAMERON ROSE ASSOCIATES

2026 Base plus Committed plus Development Traffic Flows

Figure 5-3

CAMERON ROSE
ASSOCIATES

APPENDICES

APPENDIX A

SCOPING CORRESPONDENCE FROM WREXHAM COUNTY BOROUGH COUNCIL

Cyngor Bwrdeistref Sirol Wrecsam/ Wrexham County Borough Council
Neuadd y Dref, Wrecsam. LL11 1AY
Guildhall, Wrexham. LL11 1AY
DX: 721924 - Wrexham 4
www.wrecsam.gov.uk www.wrexham.gov.uk

SG Estates
Daniel Andrews

Eich Cyf/Your Ref	
Ein Cyf/Our ref	ET/DC/MM/Pre/2021/0103
Dyddiad/Date	18th May 2021
Gofynner am/Ask for	Dominic Jones on behalf of Chief Officer, Environment & Technical
Rhif Cyswllt/Contact No	01978 298 989
E-bost/E-mail	dominic.jones@wrexham.gov.uk

Dear Sir

Land Opposite St Peters Close LL11 2UB

Residential Development for 96 Units

Further to your email / consultation dated 09/04/2021 in respect of the above, I comment as follows: -

Access Junction
The site access from Llay New Road is to be opposite Rhosrobin Road, with the junction upgraded to a four arm roundabout. The design indicated on the site layout plan appears acceptable, but a more detailed plan will be needed to support the Planning application and enable appropriate Safety Audits of the proposals to be completed.

Site Layout
The site layout provided appears appropriate, with minimum road width of 4.8m on shared surface residential roads. A tracking diagram should be provided to confirm that an 11.2m refuse lorry can safely access all residential frontages and turn in order to minimise travel in a reverse gear.
The parking provided for each dwelling must be within the maximum set out in the Wrexham County Borough Council Parking Guidelines, it is currently not clear on the PDF documents reviewed the allocation to each proposed dwelling.

Traffic Generation
An application for a development of this size should be accompanied by a Transport Assessment. This should include an assessment of the traffic impact on the Plas Acton Road/ B5425 junction.

Travel Plan
The site is reasonably well located in terms of sustainable travel options, with an existing shared use path along B5425 Llay New Road and bus stops close to the site entrance. A residential travel plan should be submitted and used to minimise reliance on private cars.

Pedestrian Crossing

Rydym yn croesawu gohebiaeth yn Gymraeg. Byddwn yn ymateb i unrhyw ohebiaeth yn Gymraeg ac ni fydd hyn yn arwain at unrhyw oedi.
We welcome correspondence in Welsh. We will respond to any correspondence in Welsh and this will not lead to any delay.

BUDDSODDWYR MEWN POBL | INVESTORS IN PEOPLE

An appropriate pedestrian crossing should be provided on the B5425. This will allow residents to safely access the northbound bus stop and to walk to amenities in Gwersylt including the railway station. Evidence of speed and traffic volume measurements will need to be provided to demonstrate the appropriate standard has been provided

Conclusion

At this stage there are no highways concerns that mean the proposal would not be acceptable. The following should be included in an application for planning permission:

- Detailed design of the proposed new access junction accompanied by a Safety Audit appropriate to the level of detailed supplied (Stage 1 at Outline and Stage 2 at Full Planning application) .
- Transport assessment including expected trip generation and traffic impact on the Plas Acton Road/ B5425 junction.
- Residential Travel Plan
- Vehicle tracking diagram showing an 11.2m refuse vehicle can safely access all parts of the site.
- Design for an appropriate pedestrian crossing on the B5425 close to the site entrance.

Yours faithfully

Chief Officer, Environment & Technical

APPENDIX B

SITE LAYOUT AND PARKING SCHEDULE

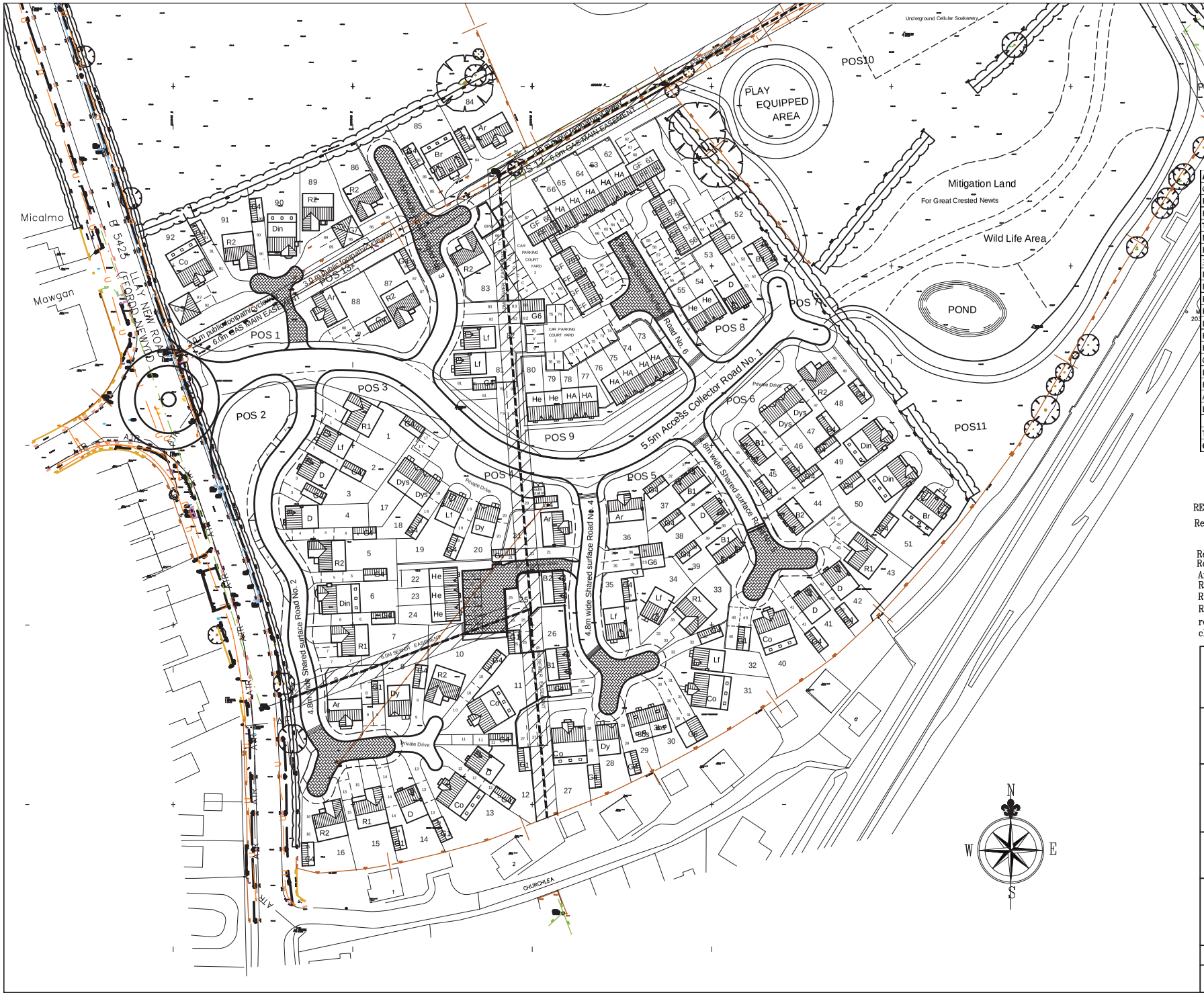

AFFORDABLE DWELLINGS	
Ground Floor Flat	6
First Floor Flat	6
HA - Henllan with increased sq footage	11
Total Affordable	**23**
MARKET VALUE DWELLINGS	
H - Henllan - 2 bed se,i/terr.	7
3BS - 3 Bed semi 2.5 Storey	2
Dy - Deganwy det	3
DyS - Deganwy semi	4
B1 - Bonfari 3 bed detached	5
B2 - Bonfari 3 bed detached	2
D - Derwent 4 bed detached 2.5 storey	8
R1 - Richmond 4 bed detached	5
R2 - Richmond 4 bed detached	9
Co - Conway 4 Bed Detached	6
Di - Dinas 4 bed detached	4
Br - Bradman 5 bed Detached	2
Ar Armitage	5
Lf - Llanferris	7
Total	**69**
GRAND TOTAL	**92**

REVISIONS

Rev F Revs made to Plots 83 to 92 as pre. inst. but not issued due to latest amendments Current amends. due to sewer relocation
Rev E Grid corrected
Rev D Subs Station added adj. plot 21 garage Amended in line with latest planning layout
Rev C Plots swapped 11 and 51
Rev B Layout redrawn due to amendments
Rev A Straightening up of units and minor relocation of road fronting plot 25 and checking easements clear of buildings

CARTWRIGHT
ARCHITECTURAL & PLANNING SERVICES

Sunnyside, Hollinwood, Whixall, Whitchurch,
Shropshire. SY13 2NL
E-mail – robert.cartwright6@btinternet.com
Telephone No. 01948 880123 mob 017917672498

CLIENT

SG ESTATES

CONTRACT

Llay New Road Rhosrobin
Wrexham

DWG TITLE:

WORKING LAYOUT

SCALE: 1:1000 @A3	DWG No.
DATE: July 2021	PL1/WD1000/F

Llay New Road, Rhosrobin

Proposed Car Parking Schedule (Based on Site Plan as Proposed - Scheme Option No.5 - Dwg No.SGE1.TMJ-05)

Plot	Housetype	Bedrooms	Required Parking (WCBC Standard)	Proposed Parking	Comments
1	R1 Richmond	4	3	3 + Garage (G4)	Integral garage
2	Llanferris	4	3	2 + Garage (G4)	
3	Derwent	4	3	2 + Garage (G4)	
4	Derwent	4	3	3 + Garage (G1)	
5	R2 Richmond	4	3	2 + Garage (G4)	
6	Dinas	4	3	3 + Garage(G4)	
7	R1 Richmond	4	3	3 + Garage	Integral garage
8	Armitage	3	3	3 + Garage (G1)	
9	Deganwy	3	3	2 + Garage (G4)	
10	R2 Richmond	4	3	3 + Garage (G4)	
11	Conway	4	3	2 + Garage (G4)	
12	Derwent	4	3	3 + Garage (G4)	
13	Conway	4	3	3 + Garage (G1)	
14	Derwent	4	3	3 + Garage (G1)	
15	R1 Richmond	4	3	3 + Garage	Integral garage
16	R2 Richmond	4	3	2 + Garage (G4)	
17	Deganwy	3	3	2 + Garage (G4)	
18	Deganwy	3	3	2 + Garage (G4)	
19	Llanferris	4	3	2 + Garage (G4)	
20	Deganwy	3	3	2 + Garage (G4)	
21	Armitage	3	3	2 + Garage (G4)	
22	Henllan	2	2	2	Plus 1 No. visitor space
23	Henllan	2	2	2	
24	Henllan	2	2	2	
25	Llanferris	4	3	2 + Garage (G4)	
26	B1 Bodfari	3	3	2 + Garage	G7 type garage - double shared
27	Conway	4	3	2 + Garage	G7 type garage - double shared
28	Deganwy	3	3	2 + Garage (G4)	
29	3BS	3	3	2 + Garage (G4)	
30	3BS	3	3	2 + Garage	G6 type garage - double shared
31	Conway	4	3	2 + Garage	G6 type garage - double shared
32	Llanferris	4	3	2 + Garage (G4)	
33	R1 Richmond	4	3	3 + Garage	Integral garage
34	Llanferris	4	3	2 + Garage (G4)	
35	B2 Bodfari	3	3	2 + Garage	G6 type garage - double shared
36	Armitage	3	3	2 + Garage	G6 type garage - double shared
37	B1 Bodfari	3	3	2 + Garage (G4)	
38	Derwent	4	3	2 + Garage (G4)	
39	B1 Bodfari	3	3	2 + Garage (G4)	
40	Conway	4	3	3 + Garage)G1)	
41	Derwent	4	3	2 + Garage (G4)	
42	Derwent	4	3	2 + Garage (G4)	
43	R1 Richmond	4	3	3 + Garage	Integral garage
44	B2 Bodfari	3	3	2 + Garage (G4)	
45	B1 Bodfari	3	3	2 + Garage (G4)	
46	Deganwy	3	3	2 + Garage (G4)	
47	Deganwy	3	3	2 + Garage (G4)	
48	R2 Richmond	4	3	2 + Garage (G4)	
49	Dinas	4	3	2 + Garage (G4)	
50	Dinas	4	3	2 + Garage (G4)	
51	Bradman	5	4	2 + Garage (G4)	
52	B1 Bodfari	3	3	2 + Garage	G6 type garage - double shared
53	Derwent	4	3	2 + Garage	G6 type garage - double shared
54	Henllan	2	2	2	
55	Henllan	2	2	2	
56	First Floor Flat	1	1.5	1	3 No. visitor parking bays and 6 No. additional 'c' parking bays provided in Car Parking Court Yard 1 and 2 i.e. 21 No. parking bays provided for 12 flats
57	Ground Floor Flat	1	1.5	1	
58	First Floor Flat	1	1.5	1	
59	Ground Floor Flat	1	1.5	1	
60	First Floor Flat	1	1.5	1	
61	Ground Floor Flat	1	1.5	1	
62	Henllan	2	2	2	
63	Henllan	2	2	2	
64	Henllan	2	2	2	
65	Henllan	2	2	2	
66	Henllan	2	2	2	
67	First Floor Flat	1	1.5	1	3 No. visitor parking bays and 6 No. additional 'c' parking bays provided in Car Parking Court Yard 1 and 2 i.e. 21 No. parking bays provided for 12 flats
68	Ground Floor Flat	1	1.5	1	
69	First Floor Flat	1	1.5	1	
70	Ground Floor Flat	1	1.5	1	
71	First Floor Flat	1	1.5	1	
72	Ground Floor Flat	1	1.5	1	
73	Henllan	2	2	2	
74	Henllan	2	2	2	
75	Henllan	2	2	2	
76	Henllan	2	2	2	
77	Henllan	2	2	2	
78	Henllan	2	2	2	
79	Henllan	2	2	2	
80	Henllan	2	2	2	
81	Llanferris	4	3	2 + Garage (G4)	
82	Llanferris	4	3	2 + Garage	G6 type garage - double shared
83	R2 Richmond	4	3	2 + Garage	G6 type garage - double shared
84	Armitage	3	3	2 + Garage (G4)	
85	Bradman	5	4	2 + Garage (G4)	
86	R2 Richmond	4	3	2 + Garage	G7 type garage - double shared
87	R2 Richmond	4	3	2 + Garage (G4)	
88	Armitage	3	3	2 + Garage (G4)	
89	R2 Richmond	4	3	2 + Garage	G7 type garage - double shared
90	Dinas	4	3	2 + Garage (G4)	
91	R2 Richmond	4	3	2 + Garage (G4)	
92	Conway	4	3	2 + Garage	G3 type double garage
Visitor Car Parking			Road 2	7	
			Road 4	2	
			Road 5	1	
			Road 6	4	

AD 11.10.21

APPENDIX C

GENERAL ACCESS ARRANGEMENT AND SWEPT PATH AUTOTRACK ANALYSIS

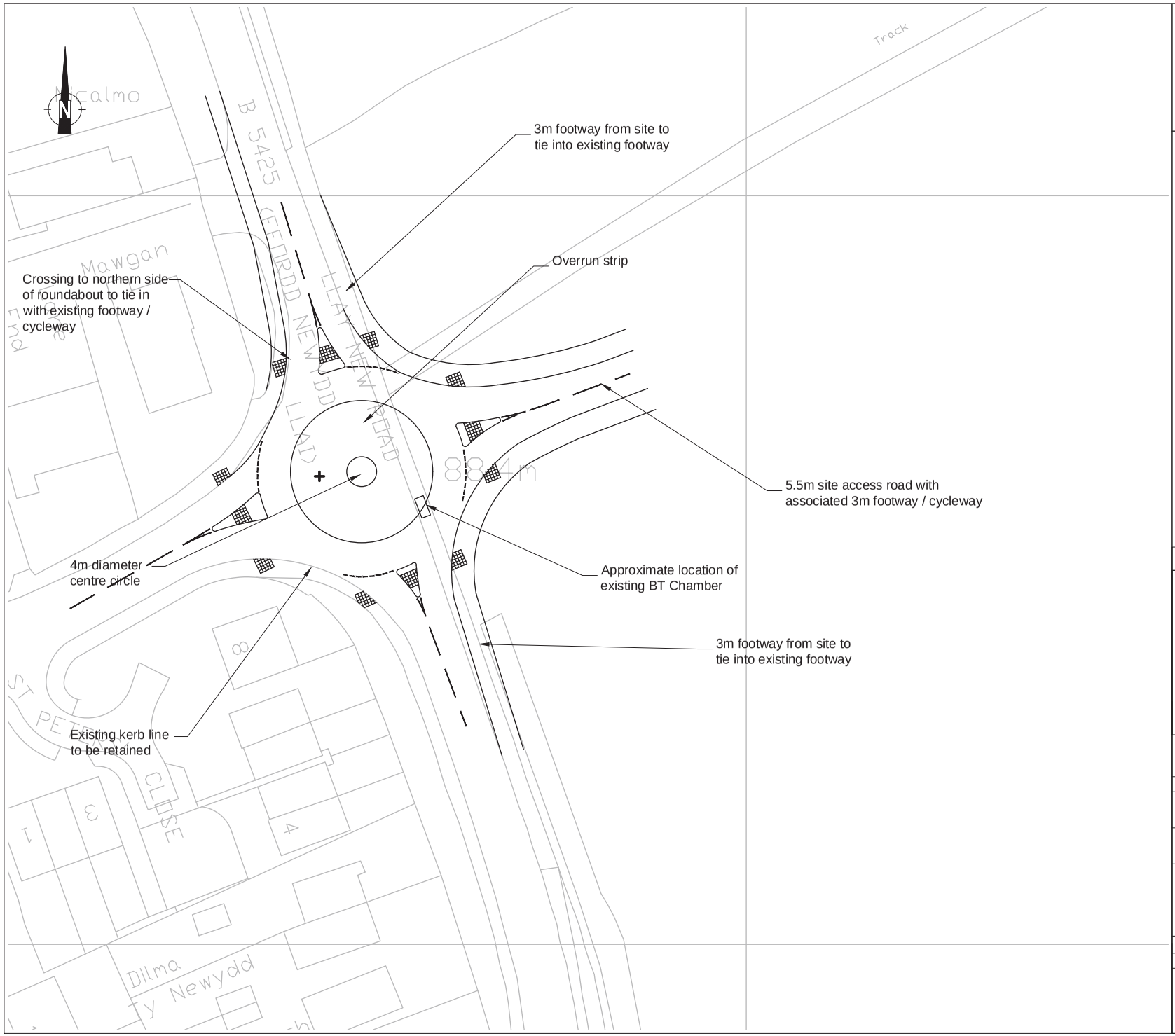

This drawing is the copyright of Cameron Rose Limited and may not be loaned, copied or reproduced in any way, or used for any offer, quote, tender or construction purposes without written consent of the company to do so.

Follow any figured dimensions - do not scale. IF IN DOUBT ASK.

This drawing has been prepared for feasibility purposes and does not represent a construction plan. All design aspects to be confirmed at the appropriate detailed design stage.

Notes:

1. Roundabout designed in accordance with DMRB TD 16/07

2. Maximum entry path radii on each arm as follows:

B5425 New Llay Road (S)	= 48.9m
Rhosrobin Road	= 117.5m
New Llay Road Road (N)	= 63.1m
Proposed Site Access	= 57.0m

Revision History		Date
A	desc	date a
B	desc	date b
C	desc	date c
D	desc	date d
E	desc	date e
F	desc	date f
G	desc	date g
H	desc	date h
I	desc	date i
J	desc	date j

Lymedale Business Centre
Hooters Hall Road
Newcastle-under-Lyme
Staffordshire
ST5 9QF
01782 627029
www.cameron-rose.co.uk

CAMERON ROSE associates

client: SG Estates

project: New Llay Road - Rhosrobin Propsed Residential Development

drawing title: New Llay Road Site Access Preliminary Design Proposal

scale(s):	date:	drawn by:	checked:
1/500	08/08/19	IJM	CAB

drawing number: 528-01/GA-01

xrefs:

status: Information

rev: -

DATE PRINTED:

This drawing is the copyright of Cameron Rose Limited and may not be loaned, copied or reproduced in any way, or used for any offer, quote, tender or construction purposes without written consent of the company to do so.

Follow any figured dimensions - do not scale. IF IN DOUBT ASK.

This drawing has been prepared for feasibility purposes and does not represent a construction plan. All design aspects to be confirmed at the appropriate detailed design stage.

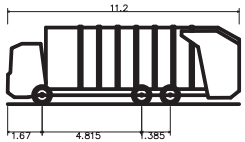

Phoenix 2 Duo (P2–15W with Elite 6x4 chassis)

Overall Length	11.200m
Overall Width	2.530m
Overall Body Height	3.751m
Min Body Ground Clearance	0.304m
Track Width	2.500m
Lock to lock time	4.00s
Kerb to Kerb Turning Radius	9.500m

•	Revision History	• Date
A	Updated Site Layout	29/10/21
B	desc	date b
C	desc	date c
D	desc	date d
E	desc	date e
F	desc	date f
G	desc	date g
H	desc	date h
I	desc	date i
J	desc	date j

Lymedale Business Centre
Hooters Hall Road
Newcastle-under-Lyme
Staffordshire
ST5 9QF
01782 627029
www.cameron-rose.co.uk

CAMERON ROSE associates

client: SG Estates

project: Llay New Road Rhosrobin

drawing title: Shared Surface Road No. 2 Track Plot Analysis 11.2m Refuse Collection Vehicle

scale(s): 1/500	date: 13/09/21	drawn by:	checked:
drawing number: 528-01/ATR-05		IJM	IM
xrefs:		status: Information	
		rev: A	

DATE PRINTED:

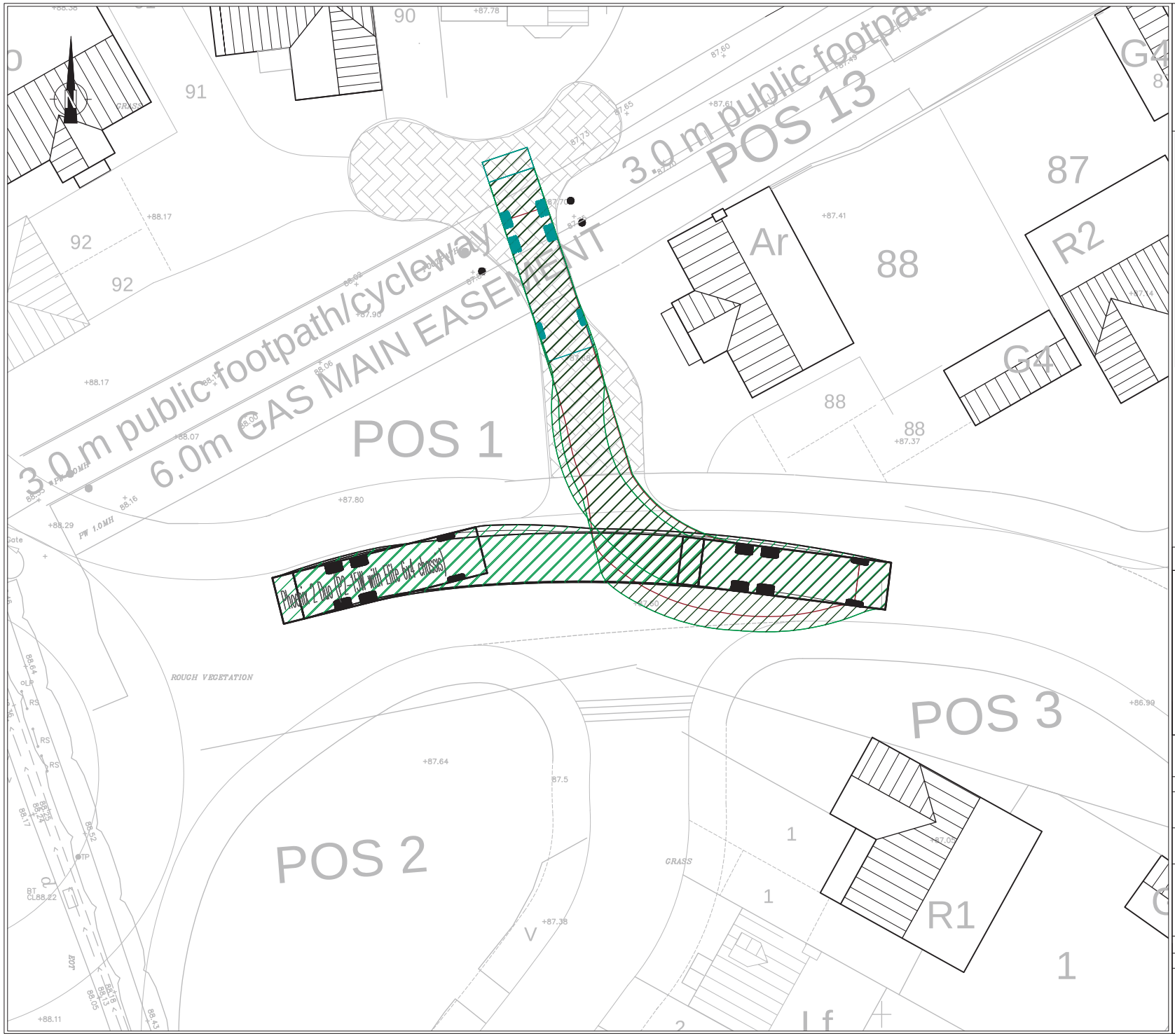

This drawing is the copyright of Cameron Rose Limited and may not be loaned, copied or reproduced in any way, or used for any offer, quote, tender or construction purposes without written consent of the company to do so.

Follow any figured dimensions - do not scale. IF IN DOUBT ASK.

This drawing has been prepared for feasibility purposes and does not represent a construction plan. All design aspects to be confirmed at the appropriate detailed design stage.

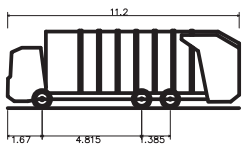

Phoenix 2 Duo (P2-15W with Elite 6x4 chassis)

Overall Length	11.200m
Overall Width	2.530m
Overall Body Height	3.751m
Min Body Ground Clearance	0.304m
Track Width	2.500m
Lock to lock time	4.00s
Kerb to Kerb Turning Radius	9.500m

•	Revision History	• Date
A	Updated Site Layout	29/10/21
B	desc	date b
C	desc	date c
D	desc	date d
E	desc	date e
F	desc	date f
G	desc	date g
H	desc	date h
I	desc	date i
J	desc	date j

Lymedale Business Centre
Hooters Hall Road
Newcastle-under-Lyme
Staffordshire
ST5 9QF
01782 627029
www.cameron-rose.co.uk

CAMERON ROSE associates

client: SG Estates

project: Llay New Road Rhosrobin

drawing title: Cul de Sac (Unreferenced) Track Plot Analysis 11.2m Refuse Collection Vehicle

scale(s): 1/200	date: 13/09/21	drawn by:	checked:
drawing number: 528-01/ATR-06		IJM	IM
xrefs:		status: Information	
		rev: A	

DATE PRINTED:

This drawing is the copyright of Cameron Rose Limited and may not be loaned, copied or reproduced in any way, or used for any offer, quote, tender or construction purposes without written consent of the company to do so.

Follow any figured dimensions - do not scale. IF IN DOUBT ASK.

This drawing has been prepared for feasibility purposes and does not represent a construction plan. All design aspects to be confirmed at the appropriate detailed design stage.

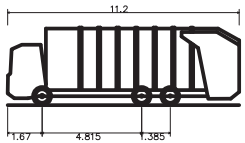

Phoenix 2 Duo (P2–15W with Elite 6x4 chassis)

Overall Length	11.200m
Overall Width	2.530m
Overall Body Height	3.751m
Min Body Ground Clearance	0.304m
Track Width	2.500m
Lock to lock time	4.00s
Kerb to Kerb Turning Radius	9.500m

•	Revision History	• Date
A	Updated Site Layout	29/10/21
B	desc	date b
C	desc	date c
D	desc	date d
E	desc	date e
F	desc	date f
G	desc	date g
H	desc	date h
I	desc	date i
J	desc	date j

Lymedale Business Centre
Hooters Hall Road
Newcastle-under-Lyme
Staffordshire
ST5 9QF
01782 627029
www.cameron-rose.co.uk

CAMERON ROSE associates

client: SG Estates

project: Llay New Road Rhosrobin

drawing title: Access Road No. 3 Track Plot Analysis 11.2m Refuse Collection Vehicle

scale(s): 1/500	date: 13/09/21	drawn by:	checked:
drawing number: 528-01/ATR-07		IJM	IM
xrefs:		status: Information	
		rev: A	

DATE PRINTED:

This drawing is the copyright of Cameron Rose Limited and may not be loaned, copied or reproduced in any way, or used for any offer, quote, tender or construction purposes without written consent of the company to do so.

Follow any figured dimensions - do not scale. IF IN DOUBT ASK.

This drawing has been prepared for feasibility purposes and does not represent a construction plan. All design aspects to be confirmed at the appropriate detailed design stage.

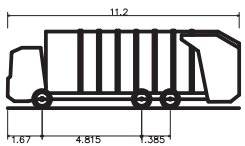

Phoenix 2 Duo (P2–15W with Elite 6x4 chassis)

Overall Length	11.200m
Overall Width	2.530m
Overall Body Height	3.751m
Min Body Ground Clearance	0.304m
Track Width	2.500m
Lock to lock time	4.00s
Kerb to Kerb Turning Radius	9.500m

•	Revision History	• Date
A	Updated Site Layout	29/10/21
B	desc	date b
C	desc	date c
D	desc	date d
E	desc	date e
F	desc	date f
G	desc	date g
H	desc	date h
I	desc	date i
J	desc	date j

Lymedale Business Centre
Hooters Hall Road
Newcastle-under-Lyme
Staffordshire
ST5 9QF
01782 627029
www.cameron-rose.co.uk

client: SG Estates

project: Llay New Road Rhosrobin

drawing title: Shared Surface Road No. 4 Track Plot Analysis 11.2m Refuse Colleciton Vehicle

scale(s): 1/500	date: 13/09/21	drawn by:	checked:
drawing number: 528-01/ATR-08		IJM	IM
xrefs:		status: Information	
		rev: A	

DATE PRINTED:

This drawing is the copyright of Cameron Rose Limited and may not be loaned, copied or reproduced in any way, or used for any offer, quote, tender or construction purposes without written consent of the company to do so.

Follow any figured dimensions - do not scale. IF IN DOUBT ASK.

This drawing has been prepared for feasibility purposes and does not represent a construction plan. All design aspects to be confirmed at the appropriate detailed design stage.

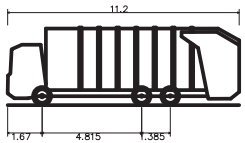

Phoenix 2 Duo (P2–15W with Elite 6x4 chassis)

Overall Length	11.200m
Overall Width	2.530m
Overall Body Height	3.751m
Min Body Ground Clearance	0.304m
Track Width	2.500m
Lock to lock time	4.00s
Kerb to Kerb Turning Radius	9.500m

•	Revision History	• Date
A	Adjusted Track Plot	14/09/21
B	desc	date b
C	desc	date c
D	desc	date d
E	desc	date e
F	desc	date f
G	desc	date g
H	desc	date h
I	desc	date i
J	desc	date j

Lymedale Business Centre
Hooters Hall Road
Newcastle-under-Lyme
Staffordshire
ST5 9QF
01782 627029
www.cameron-rose.co.uk

CAMERON ROSE associates

client: SG Estates

project: Llay New Road Rhosrobin

drawing title: Shared Surface Road No. 5 Track Plot Analysis 11.2m Refuse Collection Vehicle

scale(s): 1/500	date: 13/09/21	drawn by: IJM	checked: IM
drawing number: 528-01/ATR-09			
xrefs:		status: Information	
		rev: A	

DATE PRINTED:

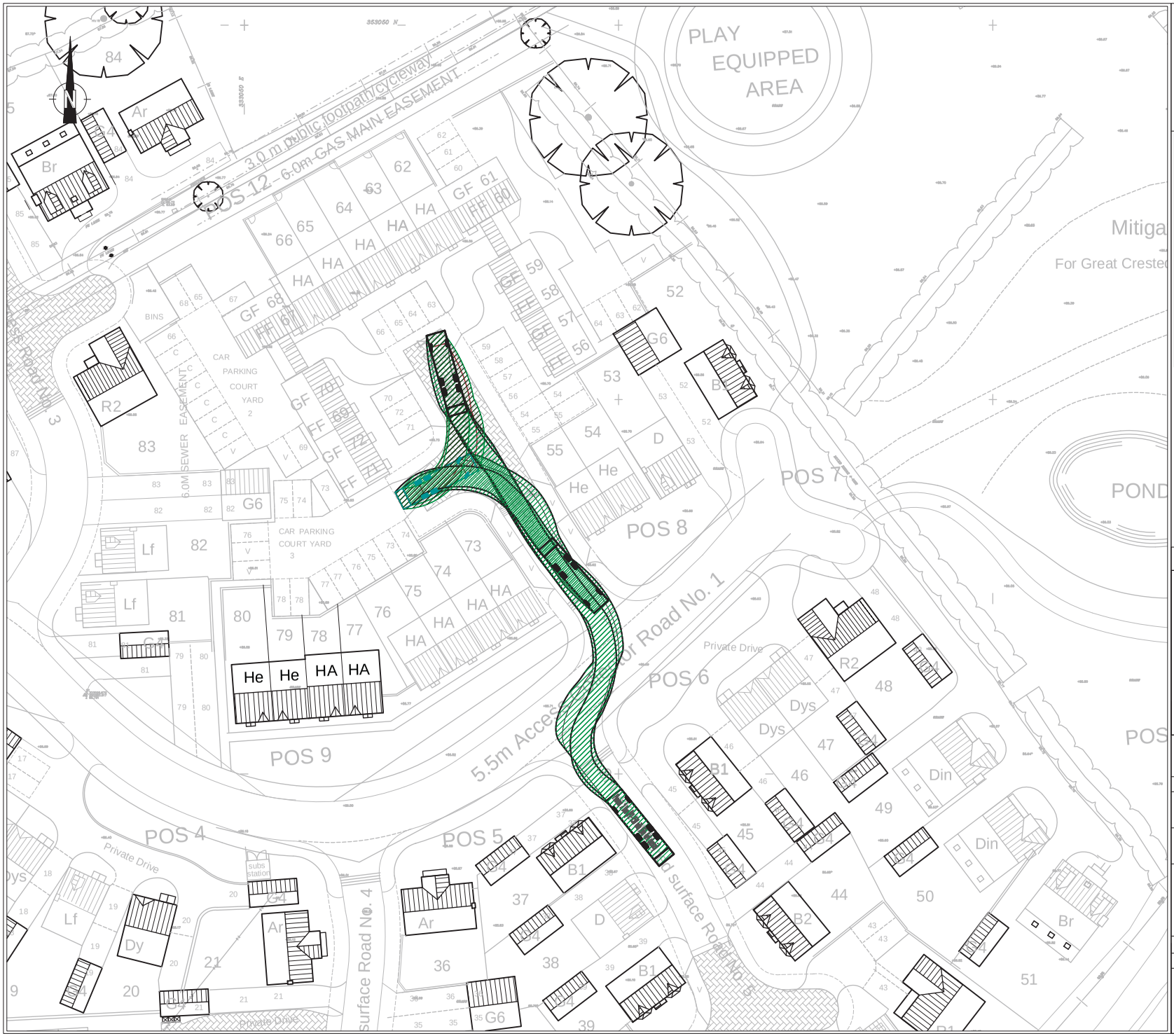

This drawing is the copyright of Cameron Rose Limited and may not be loaned, copied or reproduced in any way, or used for any offer, quote, tender or construction purposes without written consent of the company to do so.

Follow any figured dimensions - do not scale. IF IN DOUBT ASK.

This drawing has been prepared for feasibility purposes and does not represent a construction plan. All design aspects to be confirmed at the appropriate detailed design stage.

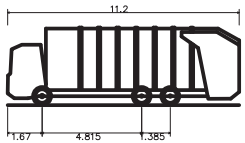

Phoenix 2 Duo (P2–15W with Elite 6x4 chassis)

Overall Length	11.200m
Overall Width	2.530m
Overall Body Height	3.751m
Min Body Ground Clearance	0.304m
Track Width	2.500m
Lock to lock time	4.00s
Kerb to Kerb Turning Radius	9.500m

•	Revision History	• Date
A	Revised Track Plot	14/09/21
B	Updated Site Layout	29/10/21
C	desc	date c
D	desc	date d
E	desc	date e
F	desc	date f
G	desc	date g
H	desc	date h
I	desc	date i
J	desc	date j

Lymedale Business Centre
Hooters Hall Road
Newcastle-under-Lyme
Staffordshire
ST5 9QF
01782 627029
www.cameron-rose.co.uk

CAMERON ROSE associates

client: SG Estates

project: Llay New Road Rhosrobin

drawing title: Shared Surface Road No. 6 Track Plot Analysis 11.2m Refuse Collection Vehicle

scale(s): 1/500	date: 13/09/21	drawn by: IJM	checked: IM
drawing number: 528-01/ATR-10			
xrefs:		status: Information	
		rev: B	

DATE PRINTED:

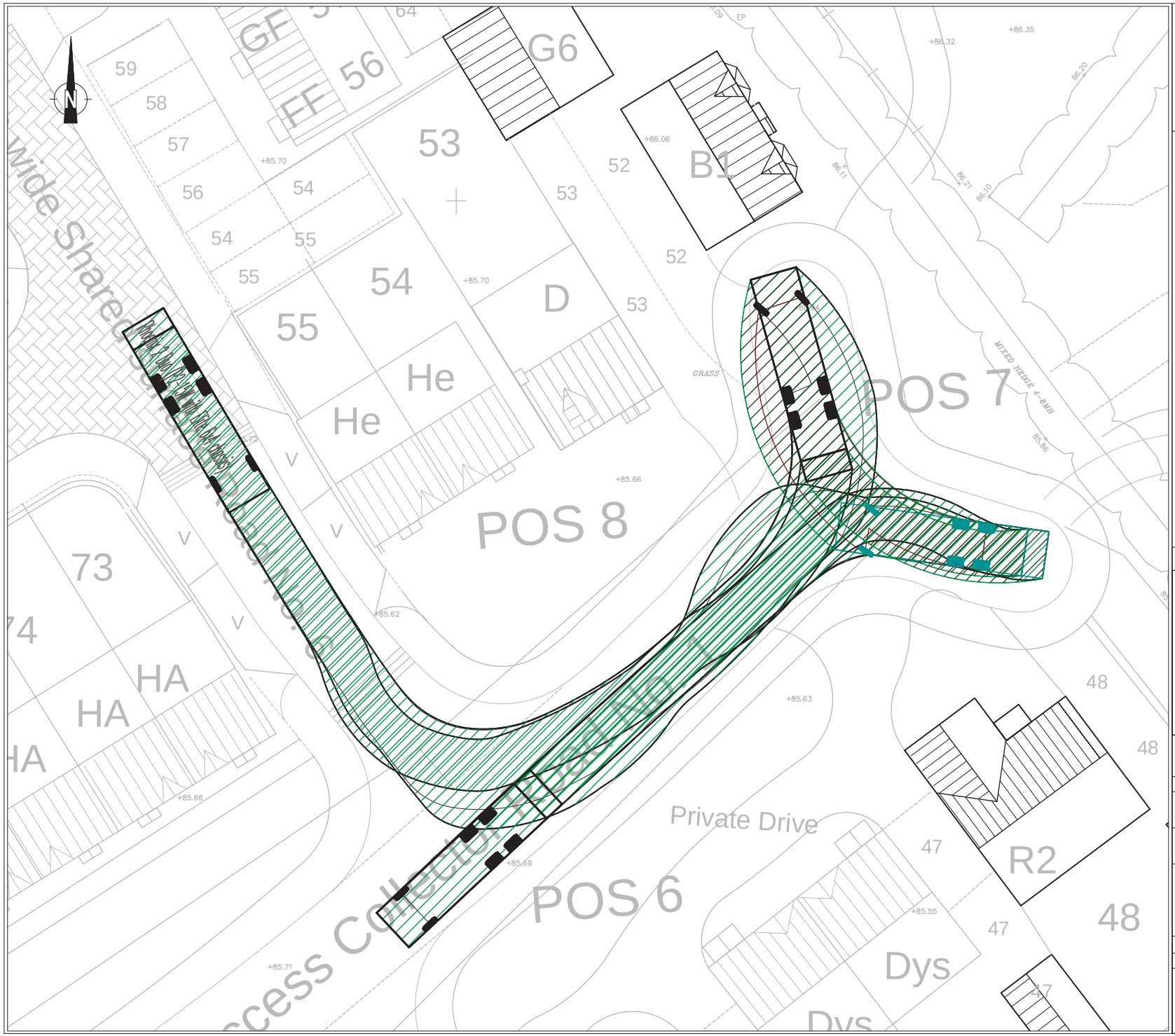

This drawing is the copyright of Cameron Rose Limited and may not be loaned, copied or reproduced in any way, or used for any offer, quote, tender or construction purposes without written consent of the company to do so.

Follow any figured dimensions - do not scale. IF IN DOUBT ASK.

This drawing has been prepared for feasibility purposes and does not represent a construction plan. All design aspects to be confirmed at the appropriate detailed design stage.

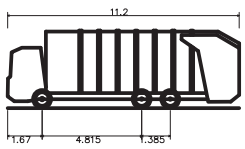

Phoenix 2 Duo (P2-15W with Elite 6x4 chassis)

Overall Length	11.200m
Overall Width	2.530m
Overall Body Height	3.751m
Min Body Ground Clearance	0.304m
Track Width	2.500m
Lock to lock time	4.00s
Kerb to Kerb Turning Radius	9.500m

Revision History		Date
A	Revised Track Plot	14/09/21
B	Updated Site Layout	29/10/21
C	desc	date c
D	desc	date d
E	desc	date e
F	desc	date f
G	desc	date g
H	desc	date h
I	desc	date i
J	desc	date j

Lymedale Business Centre
Hooters Hall Road
Newcastle-under-Lyme
Staffordshire
ST5 9QF
01782 627029
www.cameron-rose.co.uk

CAMERON ROSE associates

client: SG Estates

project: Llay New Road Rhosrobin

drawing title: Collector Road No. 1 Turning Head Track Plot Analysis 11.2m Refuse Collection Vehicle

scale(s): 1/200	date: 13/09/21	drawn by: IJM	checked: IM
drawing number: 528-01/ATR-11			
xrefs:		status: Information	
		rev: A	

DATE PRINTED:

NO COMMENTS

This drawing is the copyright of Cameron Rose Limited and may not be loaned, copied or reproduced in any way, or used for any offer, quote, tender or construction purposes without written consent of the company to do so.

Follow any figured dimensions - do not scale. IF IN DOUBT ASK.

This drawing has been prepared for feasibility purposes and does not represent a construction plan. All design aspects to be confirmed at the appropriate detailed design stage.

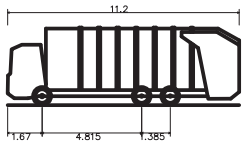

Phoenix 2 Duo (P2–15W with Elite 6x4 chassis)

Overall Length	11.200m
Overall Width	2.530m
Overall Body Height	3.751m
Min Body Ground Clearance	0.304m
Track Width	2.500m
Lock to lock time	4.00s
Kerb to Kerb Turning Radius	9.500m

• Revision History		• Date
A	Updated Site Layout	29/10/21
B	desc	date b
C	desc	date c
D	desc	date d
E	desc	date e
F	desc	date f
G	desc	date g
H	desc	date h
I	desc	date i
J	desc	date j

Lymedale Business Centre
Hooters Hall Road
Newcastle-under-Lyme
Staffordshire
ST5 9QF
01782 627029
www.cameron-rose.co.uk

CAMERON ROSE associates

client: SG Estates

project: Llay New Road Rhosrobin

drawing title: Collector Road No. 1 Track Plot Analysis 11.2m Refuse Collection Vehicle

scale(s): 1/750	date: 13/09/21	drawn by:	checked:
drawing number: 528-01/ATR-12		IJM	IM
xrefs:		status: Information	
		rev: A	

DATE PRINTED:

APPENDIX D

STAGE 1 ROAD SAFETY AUDIT AND DESIGNERS RESPONSE

Proposed Roundabout
B5425 Llay New Road, Rhosrobin
Stage 1 Road Safety Audit

Prepared by

Distribution List

1. Iain Miller – Cameron Rose
2. File Copy

REPORT NUMBER 2019/CR/1010

CONTACT

Naresh Madhavan
Highway Associates
International House
Aviation Park
Flint Road
Chester
CH4 0GZ

Tel: 07715109788

Email: Naresh@HighwayAssociates.co.uk
Web: www.HighwayAssociates.co.uk

Issue and revision record

Revision	Date	Originator	Checker	Approver	Description
FINAL	14/08/19	N Madhavan	R Sawczyn	L Madhavan	For Issue

CONTENTS

1 INTRODUCTION 1

2 ITEMS RAISED BY PREVIOUS AUDITS AND REPORTS..... 3

3 ITEMS RAISED BY THIS AUDIT 4

4 AUDIT TEAM STATEMENT..... 7

Appendix A: Drawings and documents provided

Appendix B: Plan of items raised by this audit

This document is issued for the party which commissioned it and for specific purposes connected with the above-captioned project only. It should not be relied upon by any other party or used for any other purpose.

We accept no responsibility for the consequences of this document being relied upon by any other party, or being used for any other purpose, or containing any error or omission which is due to an error or omission in data supplied to us by other parties.

This document contains confidential information and proprietary intellectual property. It should not be shown to other parties without consent from us and from the party which commissioned it.

1 INTRODUCTION

1.1 This report results from a Stage 1 Road Safety Audit carried out on proposals to provide a new 4 arm compact roundabout at the junction of B5425 Llay New Road and Rhosrobin Road. The audit was carried out during August 2019.

1.2 The audit team consisted of:

Team Leader: Naresh Madhavan MCIHT, MSoRSA EU RSA Cert. Comp
Director
Highway Associates

Team Member: Robin Sawczyn BEng MCIHT MSoRSA
Senior Road Safety Engineer
Highway Associates

1.3 The audit took place at the offices of Highway Associates, Chester. The Road Safety Audit was undertaken in accordance with the Road Safety Audit Brief provided by Iain Miller of Cameron Rose Associates. The Overseeing organisation in this instance is Wrexham Borough Council. The Road Safety Audit comprised an examination of the documents provided and these are listed in Appendix A.

The site was visited at the following times/conditions:

Day/Date	Time	Weather Con	Traffic Flow
Tues 13th August 2019	10:00 – 10:45hrs	Dry/Cloudy	Ave

1.4 The terms of reference for this audit are as given in GG119, Design Manual for Roads and Bridges. The scheme has been examined and this report compiled only with regard to the safety implications for road users of the scheme as presented. It has not been examined or verified for compliance with any other standards or criteria. However, in order to clearly explain a safety problem or the recommendation to resolve a problem, the Audit Team may on occasion have referred to a design standard for information only. Any audit comments should not be construed as implying that a technical audit has been undertaken in any respect.

1.5 If relevant within this report the generic term “pedestrians” can include walking pedestrians, wheelchair users, dismounted cyclists, the blind, partially sighted, mobility impaired and people with prams or pushchairs. Highway Maintenance Operatives are also included within this term. Where a problem is specific to one or more of these vulnerable groups then appropriate reference will be made in the report.

1.6 Any recommendations included within this report should not be regarded as being prescriptive design solutions to the problems identified. They are intended only to indicate a proportionate and viable means of eliminating or mitigating the identified problem, in accordance with GG119, and in no way imply that a formal design process has been undertaken. There may be alternative methods of addressing a problem which would be equally acceptable in achieving the desired elimination or mitigation and these should be considered when responding to this report.

1.7 This Road Safety Audit makes allowance for the fact that strategic decisions on matters such as route choice, junction type, standard of provision and approved Departures from Standards already reflect an appropriate balance of a number of factors including road safety.

1.8 The Audit Team have not been made aware of any possible geometric departures or relaxations from standards.

1.9 The reader is reminded that a Road Safety Audit is not limited to the new works alone where there are features that are considered by the Audit Team to affect the general safety in the area. Section 3 of this report lists ‘Problems’ identified from the drawings and as a result of the site visit relating to the proposed changes to the highway layout that are directly, or indirectly, related to the area (e.g. features/matters within the proposed works or immediate surrounds which the Audit Team feel should be brought to the attention of the Designer or other organisations even though they might not pose an immediate risk associated with the proposed works), and which are considered by the Audit Team to warrant attention under the subject proposals, generally by the maintaining authority. On occasions there are more sensitive issues or issues that fall outside the audit brief but which are of such a nature that Auditors feel should be specifically brought to the attention of the authorities - such issues, if they arise, are usually dealt with in detail in separate correspondence.

2 ITEMS RAISED BY PREVIOUS AUDITS AND REPORTS

2.1 A previous road safety audit stage 1 was undertaken during 2014 which has now time expired. Any points considered to remain outstanding are mentioned again within Section 3 of this report.

3 ITEMS RAISED BY THIS AUDIT

3.1 General

3.1.1 PROBLEM

Location: Proposed roundabout

Summary: Lack of deflection could result in conflict involving excessive speeds

No construction details relating to the proposed over-run area has been supplied for audit. Concern is expressed that the over-run area may be used as part of the circulatory carriageway by through vehicles encouraging higher than desired speeds which could result in an increased propensity in conflict such as sudden braking, failure to giveway and side swipe type collisions on the circulatory carriageway.

RECOMMENDATION

Ensure that careful consideration is given to the type of construction of the over-run area during the detailed design stage to discourage its use by non HGVs.

3.1.2 PROBLEM

Location: Llay New Road northbound approach to roundabout

Summary: Reduced forward visibility could result in nose to tail shunts

Northbound forward visibility towards the proposed roundabout is reduced due to the horizontal alignment of the carriageway. Whilst the minimum design standards may be achieved in accordance to the posted 30mph speed limit, concern is expressed that during the site visit, many vehicles were observed to be travelling in excess of this. Should this situation continue once the roundabout is implemented, it could result in an increased potential for nose to tail shunts on the northbound approach to the roundabout.

RECOMMENDATION

Undertake speed surveys to determine the exact nature of the problem. If necessary, additional speed reduction measures should be provided.

3.1.3 PROBLEM

Location: Llay New Road

Summary: Existing bus stop location could cause roundabout conflict

It is noted that an existing northbound bus stop lies in the vicinity of the proposed roundabout approach. Should this remain once the roundabout is implemented it is likely to obstruct the

forward visibility for both northbound drivers approaching the roundabout should a bus be waiting, increasing the propensity for nose to tail shunts and failure to giveway type collisions.

RECOMMENDATION

Relocate the existing bus stop to an appropriate location as part of the works.

3.1.4 PROBLEM

Location: Proposed roundabout circulatory

Summary: Existing BT chamber could result in loss of control type collisions

The existing BT chamber cover located on the south side of the circulatory carriageway could, as a result of its lower skid resistance, cause loss of control type collisions particularly involving powered two wheelers.

RECOMMENDATION

Relocate the BT chamber to an appropriate location as part of the proposed works. If this is not practical it may be appropriate to replace the chamber cover with an inset cover with suitable high friction surfacing.

3.2 Non Motorised Road User Provision

No comments at this stage

3.3 Road Signs and Markings

No comments at this stage

3.4 Lighting and Signals

3.4.1 PROBLEM

Location: Throughout the scheme

Summary: Insufficient lighting could result in night time conflict

The existing street lighting infrastructure within the vicinity of the proposed roundabout is substandard and in poor condition. Should this situation remain once the roundabout is implemented it could result in an increased propensity for night time conflicts at this location.

RECOMMENDATION

Undertake a street lighting assessment as part of the detailed design process to determine the appropriate level of luminance that should be provided.

3.5 Landscaping

No comments at this stage

3.6 Protective Aids

No comments at this stage

3.7 Surface Characteristics and Drainage

3.7.1 PROBLEM

Location: Circulatory carriageway

Summary: Over-run area could result in loss of control on the circulatory

No construction details relating to the proposed over-run area has been supplied for audit. Concern is expressed that if significant kerb upstands or surface materials of lesser skid resistance are provided that it could lead to loss of control type collisions particularly involving powered two wheelers.

RECOMMENDATION

Ensure that suitable surface materials are used in the construction of the over-run area and that any kerb upstand does not cause a safety risk to powered two wheelers.

4 AUDIT TEAM STATEMENT

We certify that this Audit has been carried out in accordance with the guidelines in GG119.

AUDIT TEAM LEADER

Naresh Madhavan MCIHT MSoRSA EU RSA Cert. Comp
Director
Highway Associates
International House
Aviation Park
Flint Road
Chester
CH4 0GZ

Signed:

Date: 14/08/19

AUDIT TEAM MEMBER

Robin Sawczyn BEng MCIHT MSoRSA
Senior Road Safety Engineer
Highway Associates
International House
Aviation Park
Flint Road
Chester
CH4 0GZ

Signed:

Date: 14/08/19

APPENDIX A

DRAWINGS AND DOCUMENTS PROVIDED

DRAWING NUMBER OR REFERENCE	TITLE	DATE
-	RSA1 Brief	08/08/19
528-01/GA-01	Preliminary Design Proposal	08/08/19

APPENDIX B

PLAN OF ITEMS RAISED BY THIS AUDIT

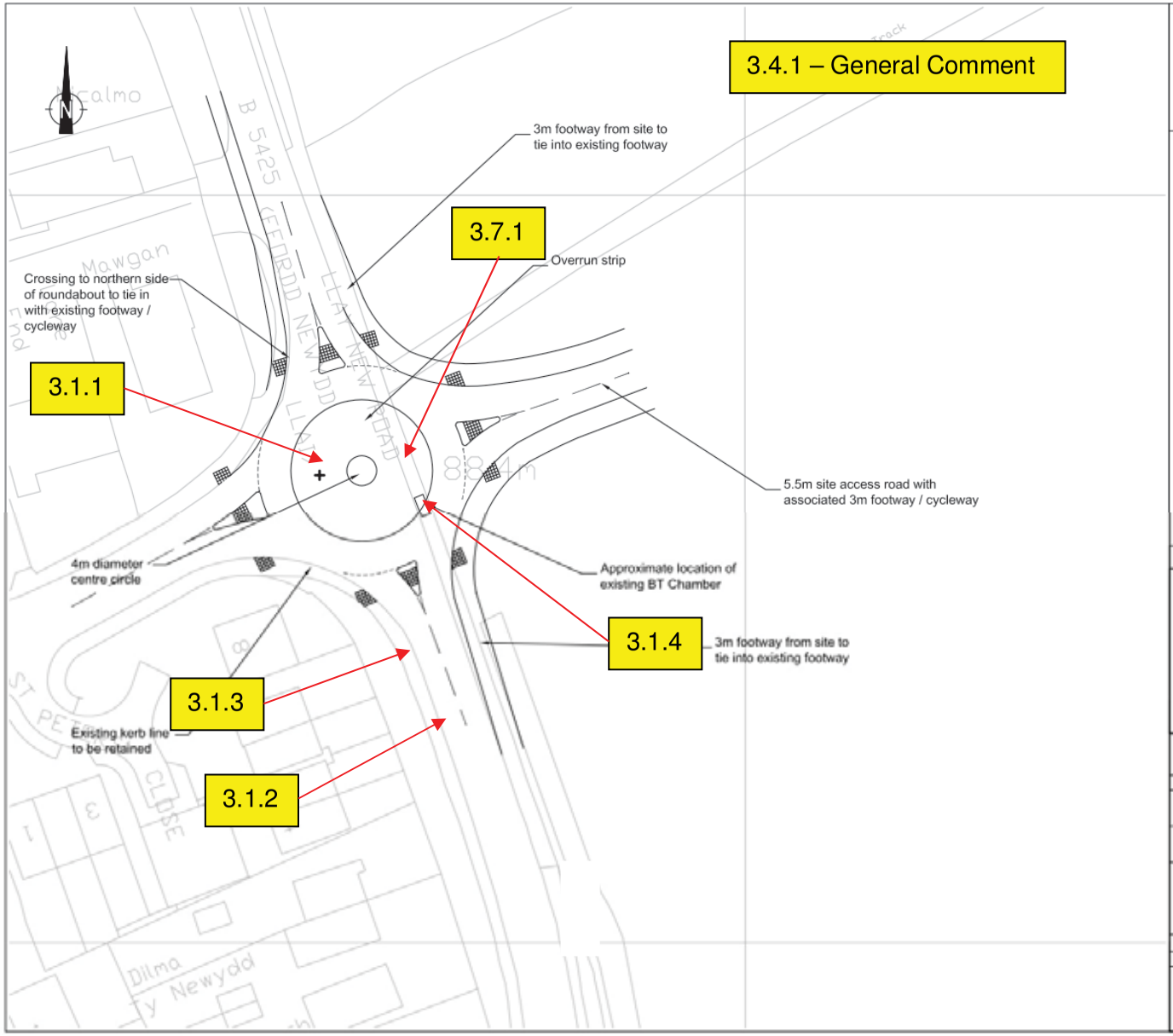

This drawing is the copyright of Cameron Rose Limited and may not be loaned, copied or reproduced in any way, or used for any offer, quote, tender or construction purposes without written consent of the company to do so.

Follow any figured dimensions - do not scale. IF IN DOUBT ASK.

This drawing has been prepared for feasibility purposes and does not represent a construction plan. All design aspects to be confirmed at the appropriate detailed design stage.

Notes:

1. Roundabout designed in accordance with DMRB TD 16/07

2. Maximum entry path radii on each arm as follows:

B5425 New Llay Road (S)	= 48.9m
Rhosrobin Road	= 117.5m
New Llay Road Road (N)	= 63.1m
Proposed Site Access	= 57.0m

Revision History		Date
A	desc	date a
B	desc	date b
C	desc	date c
D	desc	date d
E	desc	date e
F	desc	date f
G	desc	date g
H	desc	date h
I	desc	date i
J	desc	date j

CAMERON ROSE

client: SG Estates

project: New Llay Road - Rhosrobin Proposed Residential Development

drawing title: New Llay Road Site Access Preliminary Design Proposal

scale(s): 1/500	date: 06/08/19	drawn by: UM	checked: CAB
drawing number: 528-01/GA-01			

status: Information

rev: -

DATE PRINTED

Technical Note No. 1

Project: Llay New Road, Rhosrobin

Title: **Designer's Comments on Stage 1 Road Safety Audit**

Date: August 2019

1.0 Stage 1 Road Safety Audit

1.1 An independent Stage 1 Road Safety Audit has been undertaken by Highway Associates. Presented below is a summary of the safety audit findings and the designer's response to each of the problems identified.

1.2 Where noted, Cameron Rose Associates are the Traffic Engineering & Transport Planning Consultant for the project.

Problem 3.1.1

Location: Proposed roundabout

Summary: Lack of deflection could result in conflict involving excessive speeds

No construction details relating to the proposed over-run area has been supplied for audit. Concern is expressed that the over-run area may be used as part of the circulatory carriageway by through vehicles encouraging higher than desired speeds which could result in an increased propensity in conflict such as sudden braking, failure to giveway and side swipe type collisions on the circulatory carriageway.

RECOMMENDATION

Ensure that careful consideration is given to the type of construction of the over-run area during the detailed design stage to discourage its use by non HGVs.

DESIGNER'S RESPONSE

Accepted – Overrun strip to be agreed with Local Highway Authority at detailed design stage as part of the Technical Approval process associated with the s.278 agreement.

Problem 3.1.2

Location: Llay New Road northbound approach to roundabout

Summary: Reduced forward visibility could result in nose to tail shunts

Northbound forward visibility towards the proposed roundabout is reduced due to the horizontal alignment of the carriageway. Whilst the minimum design standards may be achieved in accordance to the posted 30mph speed limit, concern is expressed that during the site visit, many vehicles were

observed to be travelling in excess of this. Should this situation continue once the roundabout is implemented, it could result in an increased potential for nose to tail shunts on the northbound approach to the roundabout.

RECOMMENDATION

Undertake speed surveys to determine the exact nature of the problem. If necessary, additional speed reduction measures should be provided.

DESIGNER'S RESPONSE

Not accepted – The speed of traffic cannot be judged on the basis of the existing local highway network in its current form. The proposed changes to the network associated with this development and that approved under consent P/2016/0189 (including the signal junction at the Plas Acton Road junction) will change the local characteristics of the highway and associated approach speeds.

Problem 3.1.3

Location: Llay New Road

Summary: Existing bus stop location could cause roundabout conflict

It is noted that an existing northbound bus stop lies in the vicinity of the proposed roundabout approach. Should this remain once the roundabout is implemented it is likely to obstruct the forward visibility for both northbound drivers approaching the roundabout should a bus be waiting, increasing the propensity for nose to tail shunts and failure to giveway type collisions.

RECOMMENDATION

Relocate the existing bus stop to an appropriate location as part of the works.

DESIGNER'S RESPONSE

Accepted – Bus stop relocation to be agreed with Passenger Transport Team at detailed design stage as part of the Technical Approval process associated with the s.278 agreement.

Problem 3.1.4

Location: Proposed roundabout circulatory

Summary: Existing BT chamber could result in loss of control type collisions

The existing BT chamber cover located on the south side of the circulatory carriageway could, as a result of its lower skid resistance, cause loss of control type collisions particularly involving powered two wheelers.

RECOMMENDATION

Relocate the BT chamber to an appropriate location as part of the proposed works. If this is not practical it may be appropriate to replace the chamber cover with an inset cover with suitable high friction surfacing.

DESIGNER'S RESPONSE

Accepted – Relocation or high friction surfacing to be established at detailed design stage as part of the Technical Approval process associated with the s.278 agreement.

Problem 3.4.1

Location: Throughout the scheme

Summary: Insufficient lighting could result in night time conflict

The existing street lighting infrastructure within the vicinity of the proposed roundabout is substandard and in poor condition. Should this situation remain once the roundabout is implemented it could result in an increased propensity for night time conflicts at this location.

RECOMMENDATION

Undertake a street lighting assessment as part of the detailed design process to determine the appropriate level of luminance that should be provided.

DESIGNER'S RESPONSE

Accepted – A street lighting assessment will be undertaken at the detailed design stage and road lighting columns installed as deemed necessary.

Problem 3.7.1

Location: Circulatory carriageway

Summary: Over-run area could result in loss of control on the circulatory

No construction details relating to the proposed over-run area has been supplied for audit. Concern is expressed that if significant kerb upstands or surface materials of lesser skid resistance are provided that it could lead to loss of control type collisions particularly involving powered two wheelers.

RECOMMENDATION

Ensure that suitable surface materials are used in the construction of the over-run area and that any kerb upstand does not cause a safety risk to powered two wheelers.

DESIGNER'S RESPONSE

Accepted – Overrun strip to be agreed with Local Highway Authority at detailed design stage as part of the Technical Approval process associated with the s.278 agreement.

APPENDIX E

TRAFFIC AND QUEUE LENGTH SURVEY DATA

Wrexham - Manual Traffic Survey, Thursday 4th September 2014

Junction: (4) B5425 Llay New Road / Rhosrobin Road

Approach: B5425 Llay New Road (North)

	Ahead to B5425 Llay New Road (South)								Right to Rhosrobin Road							
TIME	P/CYCLE	M/CYCLE	CAR	LGV	OGV1	OGV2	BUS	**TOTAL**	P/CYCLE	M/CYCLE	CAR	LGV	OGV1	OGV2	BUS	**TOTAL**
0730 - 0745	0	0	33	9	0	0	0	**42**	0	0	6	1	1	0	0	**8**
0745 - 0800	0	0	71	11	2	2	1	**87**	0	0	2	2	0	0	0	**4**
Hourly Total	**0**	**0**	**104**	**20**	**2**	**2**	**1**	**129**	**0**	**0**	**8**	**3**	**1**	**0**	**0**	**12**
0800 - 0815	2	0	104	8	1	0	3	**118**	0	0	12	1	0	0	1	**14**
0815 - 0830	0	2	162	24	2	1	1	**192**	0	0	9	3	0	0	0	**12**
0830 - 0845	1	0	171	21	2	1	1	**197**	0	0	6	2	0	0	0	**8**
0845 - 0900	0	2	124	13	3	3	0	**145**	0	0	18	7	0	0	0	**25**
Hourly Total	**3**	**4**	**561**	**66**	**8**	**5**	**5**	**652**	**0**	**0**	**45**	**13**	**0**	**0**	**1**	**59**
0900 - 0915	0	0	95	13	0	2	1	**111**	0	0	12	2	0	0	0	**14**
0915 - 0930	0	1	69	13	1	0	0	**84**	0	0	9	0	0	0	0	**9**
0930 - 0945	0	0	54	13	2	1	0	**70**	0	0	3	1	0	0	0	**4**
0945 - 1000	0	2	77	9	0	1	1	**90**	0	0	9	2	0	0	0	**11**
Hourly Total	**0**	**3**	**295**	**48**	**3**	**4**	**2**	**355**	**0**	**0**	**33**	**5**	**0**	**0**	**0**	**38**
Session Total	**3**	**7**	**960**	**134**	**13**	**11**	**8**	**1136**	**0**	**0**	**86**	**21**	**1**	**0**	**1**	**109**
1600 - 1615	2	0	71	5	2	1	3	**84**	0	0	21	2	0	0	0	**23**
1615 - 1630	0	2	64	10	2	1	0	**79**	0	0	14	3	0	0	0	**17**
1630 - 1645	4	2	89	17	1	1	0	**114**	0	0	18	2	0	0	0	**20**
1645 - 1700	1	2	77	24	1	0	1	**106**	0	1	29	3	0	0	0	**33**
Hourly Total	**7**	**6**	**301**	**56**	**6**	**3**	**4**	**383**	**0**	**1**	**82**	**10**	**0**	**0**	**0**	**93**
1700 - 1715	2	2	89	12	0	0	0	**105**	1	1	17	1	0	0	0	**20**
1715 - 1730	0	1	91	7	1	0	0	**100**	0	0	19	4	0	0	0	**23**
1730 - 1745	0	2	97	6	0	0	0	**105**	0	0	20	3	0	0	0	**23**
1745 - 1800	2	0	71	6	0	0	0	**79**	0	0	26	5	0	1	0	**32**
Hourly Total	**4**	**5**	**348**	**31**	**1**	**0**	**0**	**389**	**1**	**1**	**82**	**13**	**0**	**1**	**0**	**98**
1800 - 1815	1	0	77	10	0	0	0	**88**	1	1	26	2	0	0	0	**30**
1815 - 1830	0	0	51	7	0	0	0	**58**	0	0	25	4	0	0	0	**29**
Hourly Total	**1**	**0**	**128**	**17**	**0**	**0**	**0**	**146**	**1**	**1**	**51**	**6**	**0**	**0**	**0**	**59**
Session Total	**12**	**11**	**777**	**104**	**7**	**3**	**4**	**918**	**2**	**3**	**215**	**29**	**0**	**1**	**0**	**250**

Wrexham - Manual Traffic Survey, Thursday 4th September 2014

Junction: (4) B5425 Llay New Road / Rhosrobin Road

Approach: B5425 Llay New Road (South)

	Left to Rhosrobin Road								Ahead to B5425 Llay New Road (North)							
TIME	P/CYCLE	M/CYCLE	CAR	LGV	OGV1	OGV2	BUS	**TOTAL**	P/CYCLE	M/CYCLE	CAR	LGV	OGV1	OGV2	BUS	**TOTAL**
0730 - 0745	0	0	12	4	0	0	1	**17**	1	2	61	15	3	0	2	**84**
0745 - 0800	0	0	10	3	0	0	1	**14**	1	0	77	12	1	0	0	**91**
Hourly Total	**0**	**0**	**22**	**7**	**0**	**0**	**2**	**31**	**2**	**2**	**138**	**27**	**4**	**0**	**2**	**175**
0800 - 0815	1	1	21	4	0	0	2	**29**	3	0	62	7	2	0	1	**75**
0815 - 0830	1	0	35	5	2	0	1	**44**	1	1	73	22	0	2	2	**101**
0830 - 0845	0	0	30	3	0	0	1	**34**	0	0	71	17	1	1	0	**90**
0845 - 0900	0	1	24	5	0	0	1	**31**	0	1	48	8	3	2	0	**62**
Hourly Total	**2**	**2**	**110**	**17**	**2**	**0**	**5**	**138**	**4**	**2**	**254**	**54**	**6**	**5**	**3**	**328**
0900 - 0915	0	1	38	11	1	0	1	**52**	1	0	62	21	4	2	0	**90**
0915 - 0930	0	0	26	1	0	0	1	**28**	2	1	59	10	5	4	1	**82**
0930 - 0945	0	0	26	2	0	0	0	**28**	0	0	43	14	3	0	0	**60**
0945 - 1000	0	0	14	3	1	0	2	**20**	0	0	39	13	0	0	1	**53**
Hourly Total	**0**	**1**	**104**	**17**	**2**	**0**	**4**	**128**	**3**	**1**	**203**	**58**	**12**	**6**	**2**	**285**
Session Total	**2**	**3**	**236**	**41**	**4**	**0**	**11**	**297**	**9**	**5**	**595**	**139**	**22**	**11**	**7**	**788**
1600 - 1615	2	1	43	1	1	0	1	**49**	0	1	83	9	1	0	0	**94**
1615 - 1630	1	0	35	5	1	0	1	**43**	1	3	80	12	1	0	0	**97**
1630 - 1645	0	1	53	5	0	0	2	**61**	0	1	97	16	1	0	5	**120**
1645 - 1700	0	0	54	6	0	0	1	**61**	0	1	91	16	2	2	0	**112**
Hourly Total	**3**	**2**	**185**	**17**	**2**	**0**	**5**	**214**	**1**	**6**	**351**	**53**	**5**	**2**	**5**	**423**
1700 - 1715	2	1	54	5	1	0	0	**63**	4	3	140	18	2	0	0	**167**
1715 - 1730	0	1	55	5	0	0	2	**63**	1	1	138	12	0	0	0	**152**
1730 - 1745	1	1	50	3	0	0	0	**55**	1	0	95	9	1	0	0	**106**
1745 - 1800	0	1	39	4	0	0	2	**46**	1	1	82	10	0	1	0	**95**
Hourly Total	**3**	**4**	**198**	**17**	**1**	**0**	**4**	**227**	**7**	**5**	**455**	**49**	**3**	**1**	**0**	**520**
1800 - 1815	1	1	35	3	0	0	1	**41**	1	3	88	3	0	0	0	**95**
1815 - 1830	0	0	28	4	0	0	0	**32**	1	1	82	5	0	0	0	**89**
Hourly Total	**1**	**1**	**63**	**7**	**0**	**0**	**1**	**73**	**2**	**4**	**170**	**8**	**0**	**0**	**0**	**184**
Session Total	**7**	**7**	**446**	**41**	**3**	**0**	**10**	**514**	**10**	**15**	**976**	**110**	**8**	**3**	**5**	**1127**

Wrexham - Manual Traffic Survey, Thursday 4th September 2014

Junction: (4) B5425 Llay New Road / Rhosrobin Road

Approach: Rhosrobin Road

	Left to B5425 Llay New Road (North)								Right to B5425 Llay New Road (South)							
TIME	P/CYCLE	M/CYCLE	CAR	LGV	OGV1	OGV2	BUS	**TOTAL**	P/CYCLE	M/CYCLE	CAR	LGV	OGV1	OGV2	BUS	**TOTAL**
0730 - 0745	0	1	26	2	0	0	0	**29**	0	0	10	3	0	0	0	**13**
0745 - 0800	1	0	16	3	0	0	0	**20**	0	0	25	7	0	0	1	**33**
Hourly Total	**1**	**1**	**42**	**5**	**0**	**0**	**0**	**49**	**0**	**0**	**35**	**10**	**0**	**0**	**1**	**46**
0800 - 0815	0	0	25	2	0	0	0	**27**	1	0	26	6	0	0	0	**33**
0815 - 0830	0	0	15	2	0	0	0	**17**	0	1	46	3	0	0	1	**51**
0830 - 0845	0	0	23	3	0	0	0	**26**	2	1	56	3	0	0	1	**63**
0845 - 0900	0	0	12	3	1	0	0	**16**	1	1	46	3	0	0	2	**53**
Hourly Total	**0**	**0**	**75**	**10**	**1**	**0**	**0**	**86**	**4**	**3**	**174**	**15**	**0**	**0**	**4**	**200**
0900 - 0915	0	0	12	1	0	0	0	**13**	0	0	43	2	0	0	0	**45**
0915 - 0930	0	1	8	1	0	0	0	**10**	1	0	16	4	0	0	2	**23**
0930 - 0945	0	0	8	1	1	0	1	**11**	0	0	18	5	0	0	0	**23**
0945 - 1000	0	0	12	2	0	0	0	**14**	1	0	26	4	0	0	2	**33**
Hourly Total	**0**	**1**	**40**	**5**	**1**	**0**	**1**	**48**	**2**	**0**	**103**	**15**	**0**	**0**	**4**	**124**
Session Total	**1**	**2**	**157**	**20**	**2**	**0**	**1**	**183**	**6**	**3**	**312**	**40**	**0**	**0**	**9**	**370**
1600 - 1615	0	0	12	2	0	0	0	**14**	2	0	32	9	1	0	0	**44**
1615 - 1630	0	0	8	5	0	0	0	**13**	1	1	27	6	0	0	2	**37**
1630 - 1645	0	0	12	4	0	0	0	**16**	1	0	31	4	0	0	1	**37**
1645 - 1700	0	0	11	1	1	0	0	**13**	2	0	35	4	0	0	3	**44**
Hourly Total	**0**	**0**	**43**	**12**	**1**	**0**	**0**	**56**	**6**	**1**	**125**	**23**	**1**	**0**	**6**	**162**
1700 - 1715	0	0	21	2	0	0	0	**23**	0	1	27	12	0	0	0	**40**
1715 - 1730	0	1	11	3	0	0	0	**15**	1	1	24	3	0	0	1	**30**
1730 - 1745	0	1	24	2	0	0	0	**27**	0	1	29	1	0	0	2	**33**
1745 - 1800	0	0	15	4	0	0	0	**19**	0	1	22	2	0	0	2	**27**
Hourly Total	**0**	**2**	**71**	**11**	**0**	**0**	**0**	**84**	**1**	**4**	**102**	**18**	**0**	**0**	**5**	**130**
1800 - 1815	0	0	11	1	0	0	0	**12**	0	0	19	2	0	0	1	**22**
1815 - 1830	0	0	10	0	0	0	0	**10**	1	0	18	3	0	0	1	**23**
Hourly Total	**0**	**0**	**21**	**1**	**0**	**0**	**0**	**22**	**1**	**0**	**37**	**5**	**0**	**0**	**2**	**45**
Session Total	**0**	**2**	**135**	**24**	**1**	**0**	**0**	**162**	**8**	**5**	**264**	**46**	**1**	**0**	**13**	**337**

Road Data Services Ltd

Rhosrobin
Tuesday 14th September 2021
Approach: B5425 North

	To Plas Acton Road									To B5425 (S)								
TIME	CYCLE	M/CYCLE	CAR	LGV	OGV1	OGV2	BUS	TOTAL	PCUs	CYCLE	M/CYCLE	CAR	LGV	OGV1	OGV2	BUS	TOTAL	PCUs
07:30 - 07:45	0	0	60	17	1	2	0	80	83.1	0	1	47	7	0	0	0	55	54.4
07:45 - 08:00	0	0	43	11	1	0	0	55	55.5	0	0	61	9	1	0	0	71	71.5
Hourly Total	**0**	**0**	**103**	**28**	**2**	**2**	**0**	**135**	**138.6**	**0**	**1**	**108**	**16**	**1**	**0**	**0**	**126**	**125.9**
08:00 - 08:15	0	0	49	8	1	0	0	58	58.5	0	2	83	7	0	1	2	95	97.1
08:15 - 08:30	0	0	47	8	0	0	0	55	55.0	0	1	79	12	1	1	0	94	95.2
08:30 - 08:45	0	0	32	9	0	1	0	42	43.3	0	0	84	10	1	2	0	97	100.1
08:45 - 09:00	0	0	27	8	1	0	0	36	36.5	0	0	80	8	0	0	0	88	88.0
Hourly Total	**0**	**0**	**155**	**33**	**2**	**1**	**0**	**191**	**193.3**	**0**	**3**	**326**	**37**	**2**	**4**	**2**	**374**	**380.4**
09:00 - 09:15	0	0	28	10	0	2	0	40	42.6	0	0	74	8	0	1	0	83	84.3
09:15 - 09:30	0	0	23	6	1	0	0	30	30.5	0	0	72	5	0	1	0	78	79.3
09:30 - 09:45	0	0	11	8	1	2	0	22	25.1	0	0	52	5	0	0	0	57	57.0
09:45 - 10:00	0	0	15	5	0	1	0	21	22.3	0	0	48	7	1	0	0	56	56.5
Hourly Total	**0**	**0**	**77**	**29**	**2**	**5**	**0**	**113**	**120.5**	**0**	**0**	**246**	**25**	**1**	**2**	**0**	**274**	**277.1**
TOTAL	**0**	**0**	**335**	**90**	**6**	**8**	**0**	**439**	**452.4**	**0**	**4**	**680**	**78**	**4**	**6**	**2**	**774**	**783.4**
16:00 - 16:15	0	0	19	6	0	3	0	28	31.9	0	0	59	12	0	0	0	71	71.0
16:15 - 16:30	1	1	26	5	1	0	0	34	33.1	0	0	56	9	0	1	0	66	67.3
16:30 - 16:45	2	0	27	6	0	0	0	35	33.4	0	0	58	11	0	0	0	69	69.0
16:45 - 17:00	0	0	31	3	0	1	0	35	36.3	0	0	61	13	1	0	0	75	75.5
Hourly Total	**3**	**1**	**103**	**20**	**1**	**4**	**0**	**132**	**134.7**	**0**	**0**	**234**	**45**	**1**	**1**	**0**	**281**	**282.8**
17:00 - 17:15	0	0	30	4	0	1	0	35	36.3	0	1	59	7	0	0	0	67	66.4
17:15 - 17:30	0	0	33	3	1	0	0	37	37.5	0	0	52	10	0	0	0	62	62.0
17:30 - 17:45	1	0	36	3	0	0	0	40	39.2	0	0	47	7	0	0	0	54	54.0
17:45 - 18:00	0	0	25	1	0	0	0	26	26.0	0	1	50	6	0	0	0	57	56.4
Hourly Total	**1**	**0**	**124**	**11**	**1**	**1**	**0**	**138**	**139.0**	**0**	**2**	**208**	**30**	**0**	**0**	**0**	**240**	**238.8**
18:00 - 18:15	0	0	17	0	0	1	0	18	19.3	0	0	52	8	0	0	0	60	60.0
18:15 - 18:30	0	0	15	1	0	0	0	16	16.0	0	0	47	5	0	0	0	52	52.0
Hourly Total	**0**	**0**	**32**	**1**	**0**	**1**	**0**	**34**	**35.3**	**0**	**0**	**99**	**13**	**0**	**0**	**0**	**112**	**112.0**
TOTAL	**4**	**1**	**259**	**32**	**2**	**6**	**0**	**304**	**309.0**	**0**	**2**	**541**	**88**	**1**	**1**	**0**	**633**	**633.6**

PCU Factors:	
CYCLE	0.2
M/CYCLE	0.4
CAR	1.0
LGV	1.0
OGV1	1.5
OGV2	2.3
BUS	2.0

Road Data Services Ltd

Rhosrobin
Tuesday 14th September 2021
Approach: Plas Acton Road

	To B5425 (S)									To B5425 (N)								
TIME	CYCLE	M/CYCLE	CAR	LGV	OGV1	OGV2	BUS	TOTAL	PCUs	CYCLE	M/CYCLE	CAR	LGV	OGV1	OGV2	BUS	TOTAL	PCUs
07:30 - 07:45	0	0	7	7	0	0	0	14	14.0	0	0	13	5	0	0	0	18	18.0
07:45 - 08:00	0	0	9	10	1	0	0	20	20.5	0	0	19	6	1	0	0	26	26.5
Hourly Total	**0**	**0**	**16**	**17**	**1**	**0**	**0**	**34**	**34.5**	**0**	**0**	**32**	**11**	**1**	**0**	**0**	**44**	**44.5**
08:00 - 08:15	0	0	25	7	0	0	0	32	32.0	0	1	17	17	1	2	1	39	42.5
08:15 - 08:30	0	0	27	9	0	1	0	37	38.3	0	0	26	10	0	0	0	36	36.0
08:30 - 08:45	0	0	41	12	0	2	0	55	57.6	0	0	34	9	0	0	0	43	43.0
08:45 - 09:00	0	0	36	11	1	0	0	48	48.5	0	0	28	11	1	1	0	41	42.8
Hourly Total	**0**	**0**	**129**	**39**	**1**	**3**	**0**	**172**	**176.4**	**0**	**1**	**105**	**47**	**2**	**3**	**1**	**159**	**164.3**
09:00 - 09:15	0	0	26	10	0	1	0	37	38.3	0	0	21	5	1	4	0	31	36.7
09:15 - 09:30	0	1	24	16	1	0	0	42	41.9	0	0	22	8	0	0	0	30	30.0
09:30 - 09:45	0	0	15	12	1	1	0	29	30.8	1	0	13	8	0	4	0	26	30.4
09:45 - 10:00	0	0	17	9	0	0	0	26	26.0	0	1	15	6	2	1	0	25	26.7
Hourly Total	**0**	**1**	**82**	**47**	**2**	**2**	**0**	**134**	**137.0**	**1**	**1**	**71**	**27**	**3**	**9**	**0**	**112**	**123.8**
TOTAL	**0**	**1**	**227**	**103**	**4**	**5**	**0**	**340**	**347.9**	**1**	**2**	**208**	**85**	**6**	**12**	**1**	**315**	**332.6**
16:00 - 16:15	0	0	18	7	0	0	0	25	25.0	0	0	43	15	0	0	0	58	58.0
16:15 - 16:30	0	0	17	6	1	0	0	24	24.5	0	2	39	12	1	0	0	54	53.3
16:30 - 16:45	0	0	28	10	0	0	0	38	38.0	0	1	33	9	0	1	0	44	44.7
16:45 - 17:00	0	1	31	7	0	0	0	39	38.4	0	0	40	11	0	1	0	52	53.3
Hourly Total	**0**	**1**	**94**	**30**	**1**	**0**	**0**	**126**	**125.9**	**0**	**3**	**155**	**47**	**1**	**2**	**0**	**208**	**209.3**
17:00 - 17:15	0	0	29	7	0	0	0	36	36.0	0	0	38	7	0	1	0	46	47.3
17:15 - 17:30	0	0	26	5	0	0	0	31	31.0	0	0	36	4	1	0	0	41	41.5
17:30 - 17:45	0	0	26	4	0	0	0	30	30.0	0	0	34	5	0	0	0	39	39.0
17:45 - 18:00	0	0	22	2	0	0	0	24	24.0	0	0	41	7	1	0	0	49	49.5
Hourly Total	**0**	**0**	**103**	**18**	**0**	**0**	**0**	**121**	**121.0**	**0**	**0**	**149**	**23**	**2**	**1**	**0**	**175**	**177.3**
18:00 - 18:15	0	0	23	2	0	0	0	25	25.0	1	0	43	2	0	1	0	47	47.5
18:15 - 18:30	0	0	20	2	0	0	0	22	22.0	0	0	32	2	0	0	0	34	34.0
Hourly Total	**0**	**0**	**43**	**4**	**0**	**0**	**0**	**47**	**47.0**	**1**	**0**	**75**	**4**	**0**	**1**	**0**	**81**	**81.5**
TOTAL	**0**	**1**	**240**	**52**	**1**	**0**	**0**	**294**	**293.9**	**1**	**3**	**379**	**74**	**3**	**4**	**0**	**464**	**468.1**

PCU Factors:	
CYCLE	0.2
M/CYCLE	0.4
CAR	1.0
LGV	1.0
OGV1	1.5
OGV2	2.3
BUS	2.0

Road Data Services Ltd

Rhosrobin
Tuesday 14th September 2021
Approach: B5425 South

	To B5425 (N)									To Plas Acton Road								
TIME	CYCLE	M/CYCLE	CAR	LGV	OGV1	OGV2	BUS	TOTAL	PCUs	CYCLE	M/CYCLE	CAR	LGV	OGV1	OGV2	BUS	TOTAL	PCUs
07:30 - 07:45	0	1	52	9	0	1	0	63	63.7	0	0	6	12	0	0	0	18	18.0
07:45 - 08:00	0	0	49	12	1	0	1	63	64.5	0	0	17	12	1	0	0	30	30.5
Hourly Total	**0**	**1**	**101**	**21**	**1**	**1**	**1**	**126**	**128.2**	**0**	**0**	**23**	**24**	**1**	**0**	**0**	**48**	**48.5**
08:00 - 08:15	0	0	36	5	0	1	0	42	43.3	0	0	29	12	0	2	0	43	45.6
08:15 - 08:30	0	1	36	11	0	0	0	48	47.4	0	0	22	16	0	0	0	38	38.0
08:30 - 08:45	0	1	32	12	0	0	1	46	46.4	0	0	21	10	0	0	0	31	31.0
08:45 - 09:00	0	0	35	16	1	1	0	53	54.8	0	0	19	9	1	0	0	29	29.5
Hourly Total	**0**	**2**	**139**	**44**	**1**	**2**	**1**	**189**	**191.9**	**0**	**0**	**91**	**47**	**1**	**2**	**0**	**141**	**144.1**
09:00 - 09:15	0	0	39	10	0	0	0	49	49.0	0	0	16	25	0	0	0	41	41.0
09:15 - 09:30	0	0	35	12	1	0	0	48	48.5	0	0	21	11	0	1	0	33	34.3
09:30 - 09:45	0	0	36	15	0	2	0	53	55.6	0	0	11	8	0	1	0	20	21.3
09:45 - 10:00	0	0	31	14	0	1	0	46	47.3	0	0	15	7	1	0	0	23	23.5
Hourly Total	**0**	**0**	**141**	**51**	**1**	**3**	**0**	**196**	**200.4**	**0**	**0**	**63**	**51**	**1**	**2**	**0**	**117**	**120.1**
TOTAL	**0**	**3**	**381**	**116**	**3**	**6**	**2**	**511**	**520.5**	**0**	**0**	**177**	**122**	**3**	**4**	**0**	**306**	**312.7**
16:00 - 16:15	0	1	75	7	0	1	0	84	84.7	0	0	21	7	1	0	0	29	29.5
16:15 - 16:30	0	0	79	3	0	0	0	82	82.0	0	0	26	6	0	0	0	32	32.0
16:30 - 16:45	0	0	90	5	0	0	3	98	101.0	0	0	31	8	0	1	0	40	41.3
16:45 - 17:00	0	1	87	3	1	0	0	92	91.9	0	1	31	7	1	0	0	40	39.9
Hourly Total	**0**	**2**	**331**	**18**	**1**	**1**	**3**	**356**	**359.6**	**0**	**1**	**109**	**28**	**2**	**1**	**0**	**141**	**142.7**
17:00 - 17:15	0	0	95	3	0	1	0	99	100.3	0	0	38	4	0	0	0	42	42.0
17:15 - 17:30	0	0	82	5	0	0	0	87	87.0	0	0	33	2	0	0	0	35	35.0
17:30 - 17:45	0	0	67	7	0	0	0	74	74.0	0	0	30	4	0	0	0	34	34.0
17:45 - 18:00	0	0	72	5	1	0	1	79	80.5	0	0	26	3	0	1	0	30	31.3
Hourly Total	**0**	**0**	**316**	**20**	**1**	**1**	**1**	**339**	**341.8**	**0**	**0**	**127**	**13**	**0**	**1**	**0**	**141**	**142.3**
18:00 - 18:15	0	1	80	7	1	0	0	89	88.9	0	1	17	2	0	0	0	20	19.4
18:15 - 18:30	0	0	74	4	0	0	0	78	78.0	0	0	19	4	0	0	0	23	23.0
Hourly Total	**0**	**1**	**154**	**11**	**1**	**0**	**0**	**167**	**166.9**	**0**	**1**	**36**	**6**	**0**	**0**	**0**	**43**	**42.4**
TOTAL	**0**	**3**	**801**	**49**	**3**	**2**	**4**	**862**	**868.3**	**0**	**2**	**272**	**47**	**2**	**2**	**0**	**325**	**327.4**

PCU Factors:	
CYCLE	0.2
M/CYCLE	0.4
CAR	1.0
LGV	1.0
OGV1	1.5
OGV2	2.3
BUS	2.0

Rhosrobin ATC, B5425 Llay New Road

Produced by Road Data Services Ltd.

Channel 1 - Northbound | **Vehicle Flow** | **Week 1**

Hr Ending	09/09/2021 Thursday	10/09/2021 Friday	11/09/2021 Saturday	12/09/2021 Sunday	13/09/2021 Monday	14/09/2021 Tuesday	15/09/2021 Wednesday	Weekday Average	Average
1	9	22	38	30	11	8	13	13	19
2	5	3	13	25	5	2	4	4	8
3	2	5	11	13	6	2	3	4	6
4	8	7	12	12	7	10	12	9	10
5	7	14	18	14	14	8	15	12	13
6	87	89	44	42	80	86	78	84	72
7	96	95	46	34	86	102	106	97	81
8	290	279	85	44	279	293	277	284	221
9	355	345	130	68	327	325	345	339	271
10	299	312	226	90	301	305	289	301	260
11	251	254	264	176	225	221	215	233	229
12	295	286	357	249	266	214	222	257	270
13	273	352	327	288	264	210	239	268	279
14	324	329	307	253	280	271	257	292	289
15	335	310	320	258	289	273	313	304	300
16	352	401	233	223	352	340	323	354	318
17	463	487	250	174	455	489	475	474	399
18	481	474	458	155	472	480	430	467	421
19	318	312	201	120	309	323	311	315	271
20	197	195	173	112	175	207	186	192	178
21	147	145	127	64	118	122	152	137	125
22	110	101	79	56	78	76	82	89	83
23	38	80	62	30	50	49	65	56	53
24	22	40	60	16	15	21	19	23	28

7-19	4036	4141	3158	2098	3819	3744	3696	3887	3527
6-22	4586	4677	3583	2364	4276	4251	4222	4402	3994
6-24	4646	4797	3705	2410	4341	4321	4306	4482	4075
0-24	4764	4937	3841	2546	4464	4437	4431	4607	4203

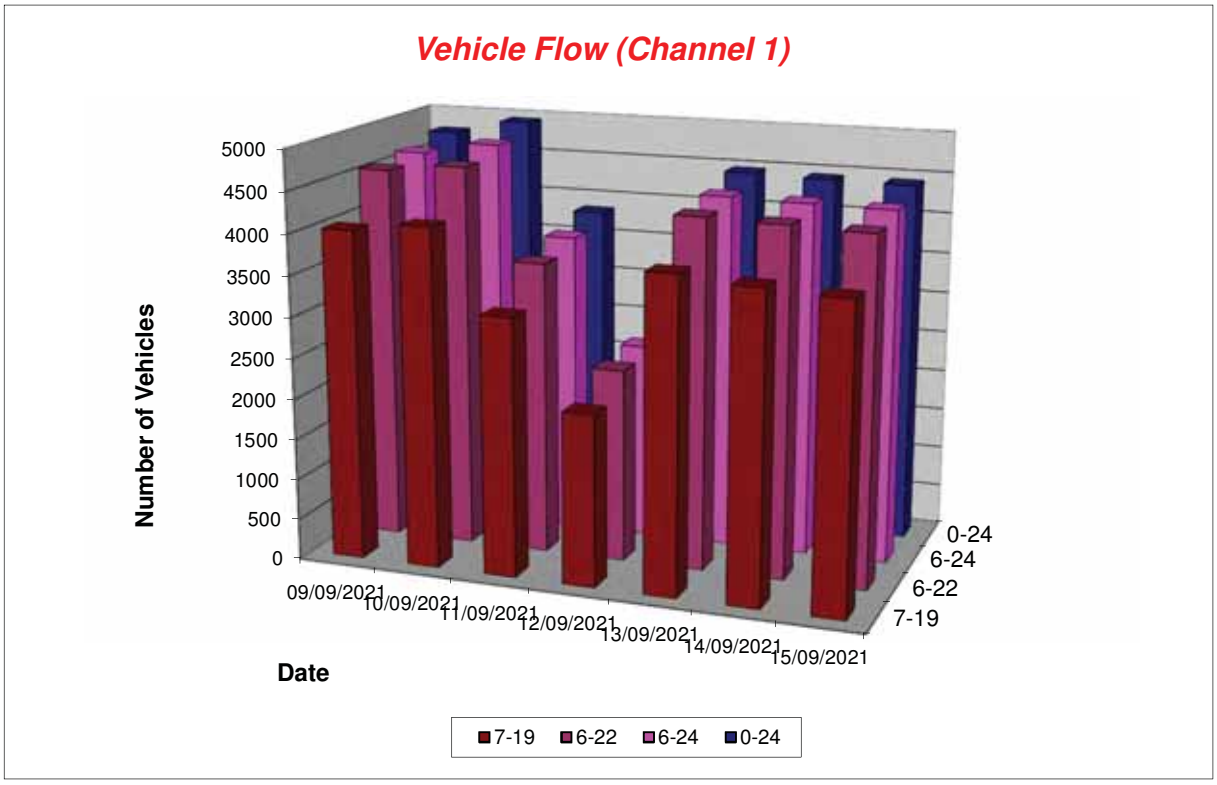

Rhosrobin ATC, B5425 Llay New Road

Produced by Road Data Services Ltd.

Channel 1 - Northbound **Average Speed** **Week 1**

Hr Ending	09/09/2021 Thursday	10/09/2021 Friday	11/09/2021 Saturday	12/09/2021 Sunday	13/09/2021 Monday	14/09/2021 Tuesday	15/09/2021 Wednesday
1	33.8	31.7	34.0	31.3	31.4	32.1	31.6
2	32.3	36.1	31.5	31.3	33.9	26.5	42.4
3	31.7	30.6	33.3	39.4	34.2	37.3	37.2
4	29.1	31.2	37.4	32.5	29.0	31.4	31.2
5	29.1	34.9	31.5	35.9	28.0	23.0	29.3
6	29.9	31.6	27.8	31.4	30.4	29.2	28.4
7	29.4	29.9	30.7	32.9	28.9	28.8	29.7
8	27.3	27.7	30.8	30.1	27.9	28.5	28.1
9	26.8	27.0	29.5	30.0	27.4	27.3	27.7
10	28.0	27.8	28.5	30.7	27.4	27.9	27.9
11	27.8	27.9	28.1	29.4	28.0	28.2	28.6
12	27.3	27.6	27.6	28.4	27.9	28.1	27.8
13	27.9	27.4	28.3	28.1	28.0	27.0	28.3
14	27.8	28.0	28.0	27.9	27.2	27.3	28.0
15	28.0	28.1	28.3	29.3	27.6	27.9	28.3
16	28.2	27.7	27.9	29.0	27.8	28.1	28.9
17	27.5	27.2	28.7	29.6	27.7	27.7	28.4
18	27.5	27.7	28.5	29.3	27.6	27.7	28.7
19	28.3	28.6	29.1	29.8	28.6	29.4	29.0
20	29.2	29.6	30.1	28.7	29.9	29.9	29.6
21	29.2	30.0	29.4	31.5	29.4	29.2	29.0
22	29.8	29.9	29.9	32.0	30.9	29.5	30.5
23	30.5	30.5	32.0	31.9	29.5	31.7	30.8
24	32.3	31.3	32.2	30.6	30.8	31.7	32.8

10-12	27.5	27.7	27.8	28.8	27.9	28.2	28.2
14-16	28.1	27.9	28.1	29.1	27.7	28.0	28.6
0-24	28.0	28.1	28.8	29.4	28.0	28.2	28.6

Average (ALL)	28.4
Weekday Inter-Peak	28.0

Channel 1 - Northbound **85th Percentile**

Hr Ending	09/09/2021 Thursday	10/09/2021 Friday	11/09/2021 Saturday	12/09/2021 Sunday	13/09/2021 Monday	14/09/2021 Tuesday	15/09/2021 Wednesday
1	40.3	37.6	41.5	36.6	37.5	34.8	42.9
2	38.7	38.8	38.5	37.6	34.8	27.3	48.3
3	35.0	34.6	40.5	50.4	44.6	45.2	40.1
4	31.6	35.7	45.0	39.3	36.9	37.3	35.5
5	35.9	46.7	38.4	43.4	33.8	29.2	36.0
6	36.7	37.8	32.7	38.0	36.8	37.1	35.0
7	35.1	34.8	37.4	41.1	34.2	34.0	36.2
8	32.5	32.1	37.3	36.1	32.5	33.3	33.1
9	30.8	30.5	35.3	36.2	31.8	31.6	32.3
10	32.4	32.4	32.9	37.3	31.8	33.0	32.9
11	32.1	32.6	32.5	34.6	32.5	32.7	33.2
12	31.5	31.5	32.0	33.3	32.3	32.8	32.4
13	32.6	31.9	33.0	32.4	32.4	31.4	33.3
14	32.0	32.6	32.7	32.4	31.9	31.6	32.1
15	32.6	32.4	32.7	34.5	32.0	32.1	32.9
16	32.2	32.1	32.5	33.5	32.2	32.5	33.5
17	31.5	31.2	33.2	34.8	31.9	31.7	32.7
18	32.4	31.8	32.6	34.1	31.5	32.2	33.5
19	32.8	32.8	33.5	34.5	33.5	34.0	33.9
20	33.9	34.4	34.9	34.0	34.4	34.8	35.0
21	34.0	35.3	34.6	39.3	34.1	33.8	33.5
22	35.7	36.0	35.3	38.0	35.6	34.2	35.3
23	35.7	36.9	38.2	37.9	35.0	37.6	36.4
24	39.2	36.3	38.7	34.4	35.8	39.1	39.0

10-12	31.8	32.0	32.2	33.9	32.4	32.8	32.8
14-16	32.4	32.2	32.6	34.0	32.1	32.3	33.2
0-24	32.7	32.7	33.8	34.9	32.6	32.9	33.5

85th %ile (ALL)	33.2
Weekday Inter-Peak	32.4

Rhosrobin ATC, B5425 Llay New Road

Produced by Road Data Services Ltd.

Channel 1 - Northbound **Speed Summary** **Week 1**

Speed (MPH)	09/09/2021 Thursday	10/09/2021 Friday	11/09/2021 Saturday	12/09/2021 Sunday	13/09/2021 Monday	14/09/2021 Tuesday	15/09/2021 Wednesday
0-30	3533	3597	2521	1547	3263	3193	2988
30-40	1179	1290	1257	923	1171	1210	1393
40-50	48	45	59	67	30	32	47
50+	4	5	4	9	0	2	3
TOTAL	**4764**	**4937**	**3841**	**2546**	**4464**	**4437**	**4431**

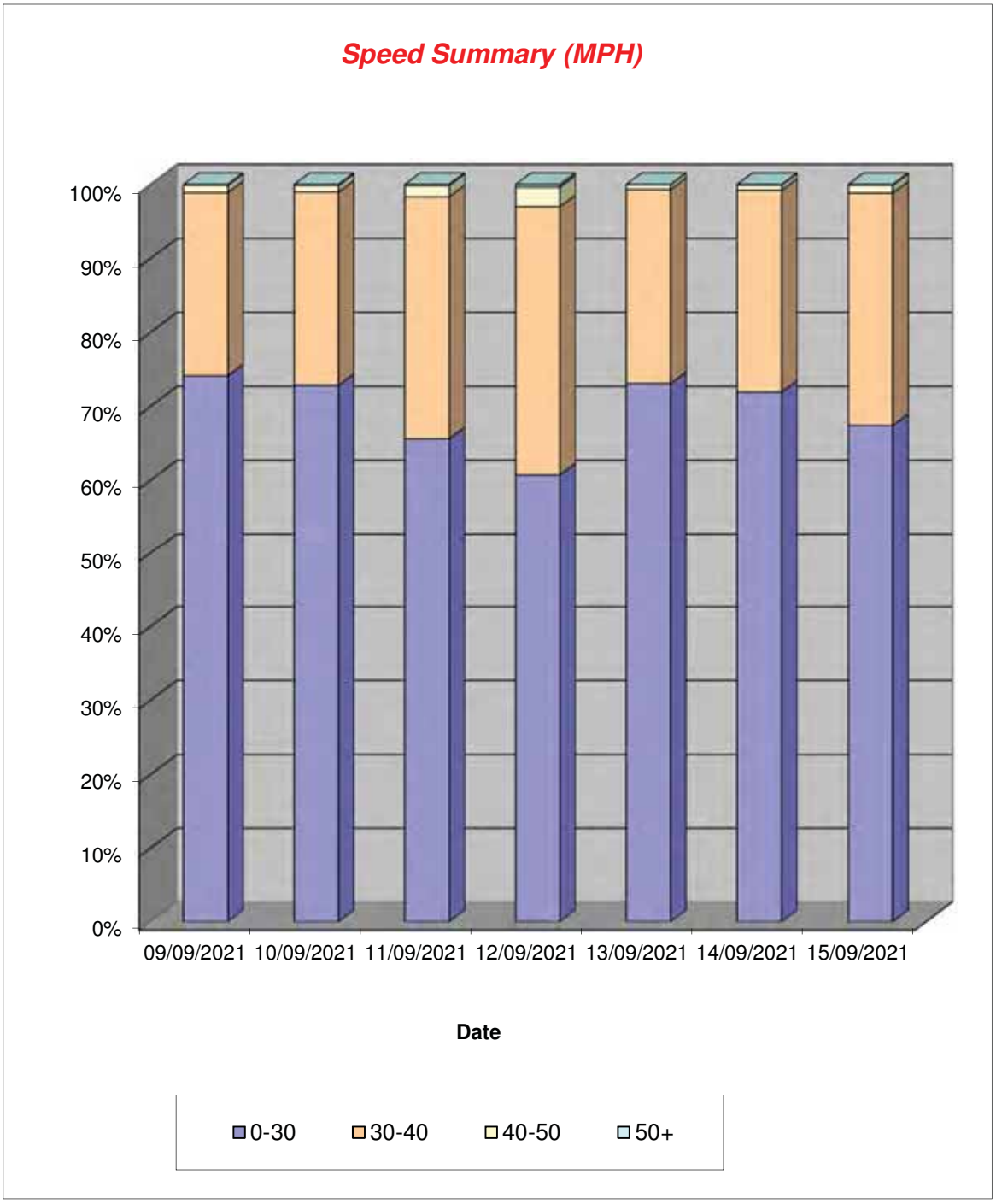

Rhosrobin ATC, B5425 Llay New Road

Produced by Road Data Services Ltd.

Channel 1 - Northbound | **Vehicle Class** | **Week 1**

Classes / Day / Time	Car / LGV / Caravan - 1	OGV1 / Bus - 2,3,5,6,7,12	OGV2 - 4,8,9,10,11,13	TOTAL - 1-13
09/09/2021				
7-19	3960	69	7	4036
6-22	4501	78	7	4586
6-24	4561	78	7	4646
0-24	4674	81	9	4764
10/09/2021				
7-19	4066	69	6	4141
6-22	4597	73	7	4677
6-24	4717	73	7	4797
0-24	4854	73	10	4937
11/09/2021				
7-19	3130	24	4	3158
6-22	3552	26	5	3583
6-24	3674	26	5	3705
0-24	3809	26	6	3841
12/09/2021				
7-19	2086	9	3	2098
6-22	2352	9	3	2364
6-24	2398	9	3	2410
0-24	2534	9	3	2546
13/09/2021				
7-19	3755	54	10	3819
6-22	4207	59	10	4276
6-24	4272	59	10	4341
0-24	4394	60	10	4464
14/09/2021				
7-19	3681	54	9	3744
6-22	4181	61	9	4251
6-24	4251	61	9	4321
0-24	4365	62	10	4437
15/09/2021				
7-19	3625	64	7	3696
6-22	4147	68	7	4222
6-24	4231	68	7	4306
0-24	4352	69	10	4431

Average				
7-19	3472	49	7	3527
6-22	3934	53	7	3994
6-24	4015	53	7	4075
0-24	4140	54	8	4203

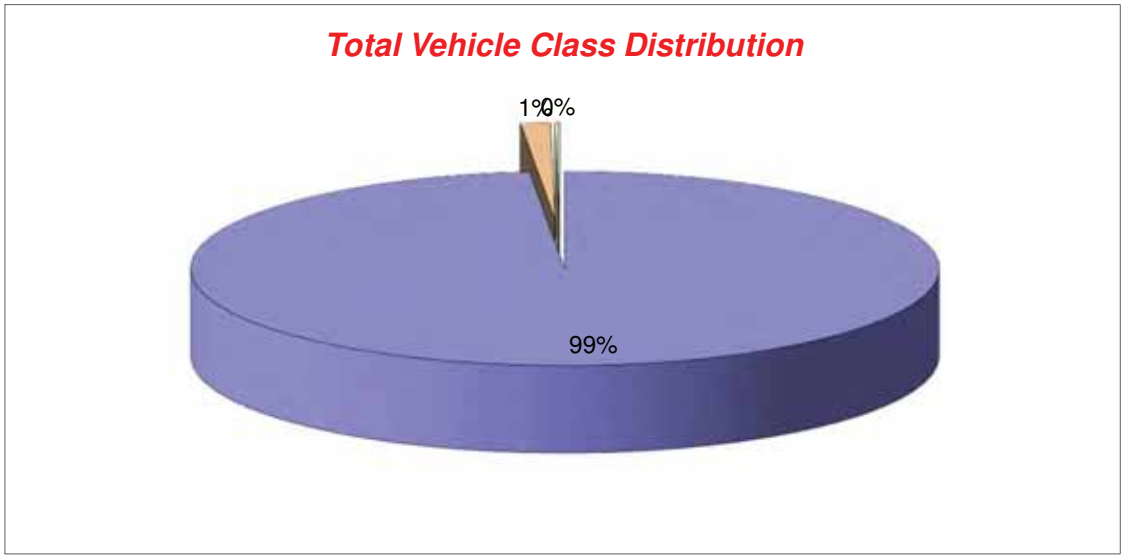

Rhosrobin ATC, B5425 Llay New Road

Produced by Road Data Services Ltd.

Channel 2 - Southbound | **Vehicle Flow** | **Week 1**

Hr Ending	09/09/2021 Thursday	10/09/2021 Friday	11/09/2021 Saturday	12/09/2021 Sunday	13/09/2021 Monday	14/09/2021 Tuesday	15/09/2021 Wednesday	Weekday Average	Average
1	15	15	42	30	9	11	29	16	22
2	7	3	18	24	1	5	16	6	11
3	6	6	10	15	6	4	14	7	9
4	4	5	20	6	6	12	12	8	9
5	12	18	10	17	12	15	13	14	14
6	37	34	27	16	28	26	33	32	29
7	89	90	43	28	75	99	94	89	74
8	287	277	68	40	251	282	269	273	211
9	596	587	186	62	588	538	576	577	448
10	390	401	274	128	386	399	367	389	335
11	296	285	305	168	274	286	287	286	272
12	290	281	320	207	251	291	267	276	272
13	279	268	331	259	240	228	276	258	269
14	285	329	335	256	261	257	214	269	277
15	315	320	291	229	267	263	243	282	275
16	339	344	197	191	295	288	252	304	272
17	422	411	202	158	399	402	401	407	342
18	413	323	227	151	357	360	344	359	311
19	292	279	198	149	244	281	251	269	242
20	190	180	166	121	155	170	190	177	167
21	105	142	111	74	94	129	104	115	108
22	58	157	83	47	52	89	60	83	78
23	46	106	64	29	55	61	60	66	60
24	22	57	40	17	23	34	29	33	32

7-19	4204	4105	2934	1998	3813	3875	3747	3949	3525
6-22	4646	4674	3337	2268	4189	4362	4195	4413	3953
6-24	4714	4837	3441	2314	4267	4457	4284	4512	4045
0-24	4795	4918	3568	2422	4329	4530	4401	4595	4138

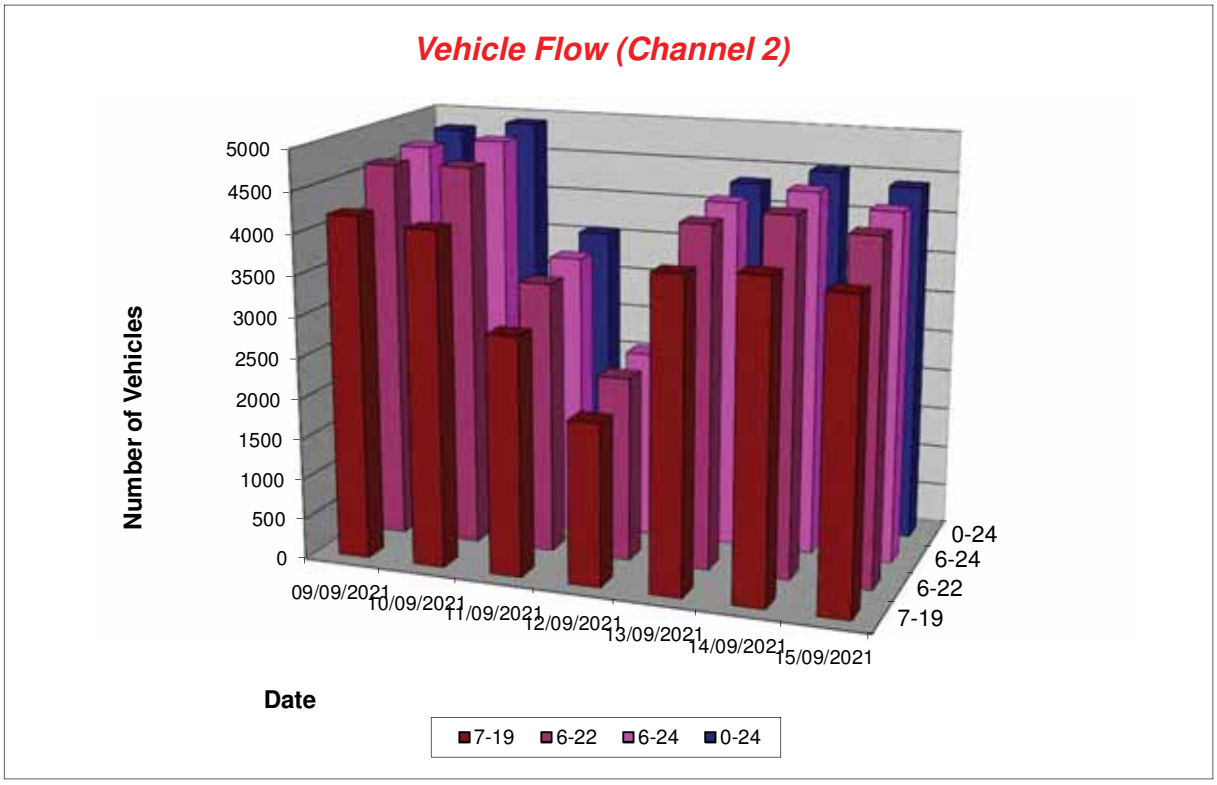

Rhosrobin ATC, B5425 Llay New Road

Produced by Road Data Services Ltd.

Channel 2 - Southbound **Average Speed** **Week 1**

Hr Ending	09/09/2021 Thursday	10/09/2021 Friday	11/09/2021 Saturday	12/09/2021 Sunday	13/09/2021 Monday	14/09/2021 Tuesday	15/09/2021 Wednesday
1	30.8	29.6	30.2	31.0	29.8	36.2	32.1
2	35.4	28.1	30.7	33.8	21.3	28.3	34.5
3	35.5	33.6	34.4	32.5	28.5	31.0	34.5
4	32.0	32.1	35.0	28.5	28.5	31.0	36.9
5	32.5	30.1	38.7	36.4	34.1	33.4	32.4
6	30.1	31.0	31.6	32.2	31.9	30.1	31.1
7	31.0	31.2	31.8	31.1	31.2	31.2	31.9
8	28.7	29.7	32.8	33.0	30.0	29.8	29.6
9	27.1	26.6	29.9	30.3	26.9	28.1	27.8
10	28.3	27.6	28.9	29.5	28.7	27.6	28.4
11	27.6	28.7	28.4	29.6	28.3	28.7	29.3
12	27.6	28.6	28.1	28.7	28.8	27.8	27.7
13	28.0	27.5	28.7	28.3	28.0	28.2	29.4
14	27.8	27.9	28.5	28.6	28.4	28.0	28.9
15	28.1	28.3	28.9	28.8	28.2	28.0	29.6
16	28.1	27.6	29.6	30.1	26.9	27.2	28.2
17	25.6	27.5	28.8	29.8	26.4	26.3	29.4
18	27.6	27.6	29.8	30.7	27.2	27.5	28.3
19	28.8	29.9	29.5	29.7	29.3	29.6	29.6
20	29.0	29.2	30.3	29.6	29.3	29.9	29.9
21	29.1	29.3	28.9	30.1	28.9	27.2	29.5
22	29.1	27.6	30.7	31.8	29.1	29.7	30.3
23	29.2	30.3	31.7	32.7	32.2	30.5	29.3
24	31.5	29.8	31.0	31.0	30.1	30.3	31.8
10-12	27.6	28.7	28.2	29.1	28.6	28.2	28.6
14-16	28.1	27.9	29.2	29.4	27.5	27.6	28.9
0-24	27.9	28.2	29.3	29.7	28.2	28.3	29.1

Average (ALL)	28.6
Weekday Inter-Peak	28.1

Channel 2 - Southbound **85th Percentile**

Hr Ending	09/09/2021 Thursday	10/09/2021 Friday	11/09/2021 Saturday	12/09/2021 Sunday	13/09/2021 Monday	14/09/2021 Tuesday	15/09/2021 Wednesday
1	34.3	33.0	35.9	38.2	35.2	45.7	38.5
2	43.1	32.6	37.3	43.7	-	31.4	41.3
3	46.7	36.5	44.8	40.9	32.6	36.8	39.5
4	36.3	34.6	44.9	35.0	31.7	39.4	45.4
5	40.6	37.5	47.9	44.3	41.5	38.5	37.6
6	37.6	37.4	37.7	38.4	38.0	35.5	37.6
7	36.2	36.8	38.3	36.1	35.9	36.4	38.2
8	33.3	34.3	39.4	40.2	35.3	34.6	33.8
9	32.2	32.1	34.4	34.9	31.6	32.6	32.4
10	33.4	32.2	33.6	34.7	32.7	32.3	33.1
11	32.3	33.1	34.6	34.0	32.8	33.5	34.1
12	32.1	33.4	33.1	33.3	34.0	33.3	33.0
13	33.4	33.0	33.6	33.4	32.7	32.8	34.7
14	33.4	32.5	33.3	33.2	34.2	32.4	33.8
15	33.4	33.3	33.4	33.3	32.8	33.5	35.5
16	32.8	33.0	34.5	35.0	32.4	32.5	33.8
17	32.3	32.4	34.2	35.1	32.4	32.7	34.3
18	32.3	32.5	34.6	36.2	32.1	33.1	34.2
19	34.0	35.3	35.0	34.8	33.6	34.3	34.3
20	33.7	34.5	36.2	34.8	34.0	34.9	34.6
21	34.6	33.9	34.5	36.7	34.0	31.9	34.3
22	35.3	33.1	36.8	37.8	34.9	35.6	36.9
23	35.8	36.5	38.2	38.0	39.8	36.1	35.1
24	39.2	35.7	37.6	37.2	37.3	34.8	38.7
10-12	32.2	33.3	33.8	33.6	33.5	33.4	33.7
14-16	33.1	33.1	33.9	34.1	32.6	33.0	34.7
0-24	33.3	33.4	34.8	35.1	33.4	33.6	34.4

85th %ile (ALL)	34.0
Weekday Inter-Peak	33.2

Rhosrobin ATC, B5425 Llay New Road

Produced by Road Data Services Ltd.

Channel 2 - Southbound **Speed Summary** **Week 1**

Speed (MPH)	09/09/2021 Thursday	10/09/2021 Friday	11/09/2021 Saturday	12/09/2021 Sunday	13/09/2021 Monday	14/09/2021 Tuesday	15/09/2021 Wednesday
0-30	3356	3413	2211	1430	3044	3139	2760
30-40	1388	1447	1258	920	1227	1322	1544
40-50	47	57	88	65	54	66	90
50+	4	1	11	7	4	3	7
TOTAL	**4795**	**4918**	**3568**	**2422**	**4329**	**4530**	**4401**

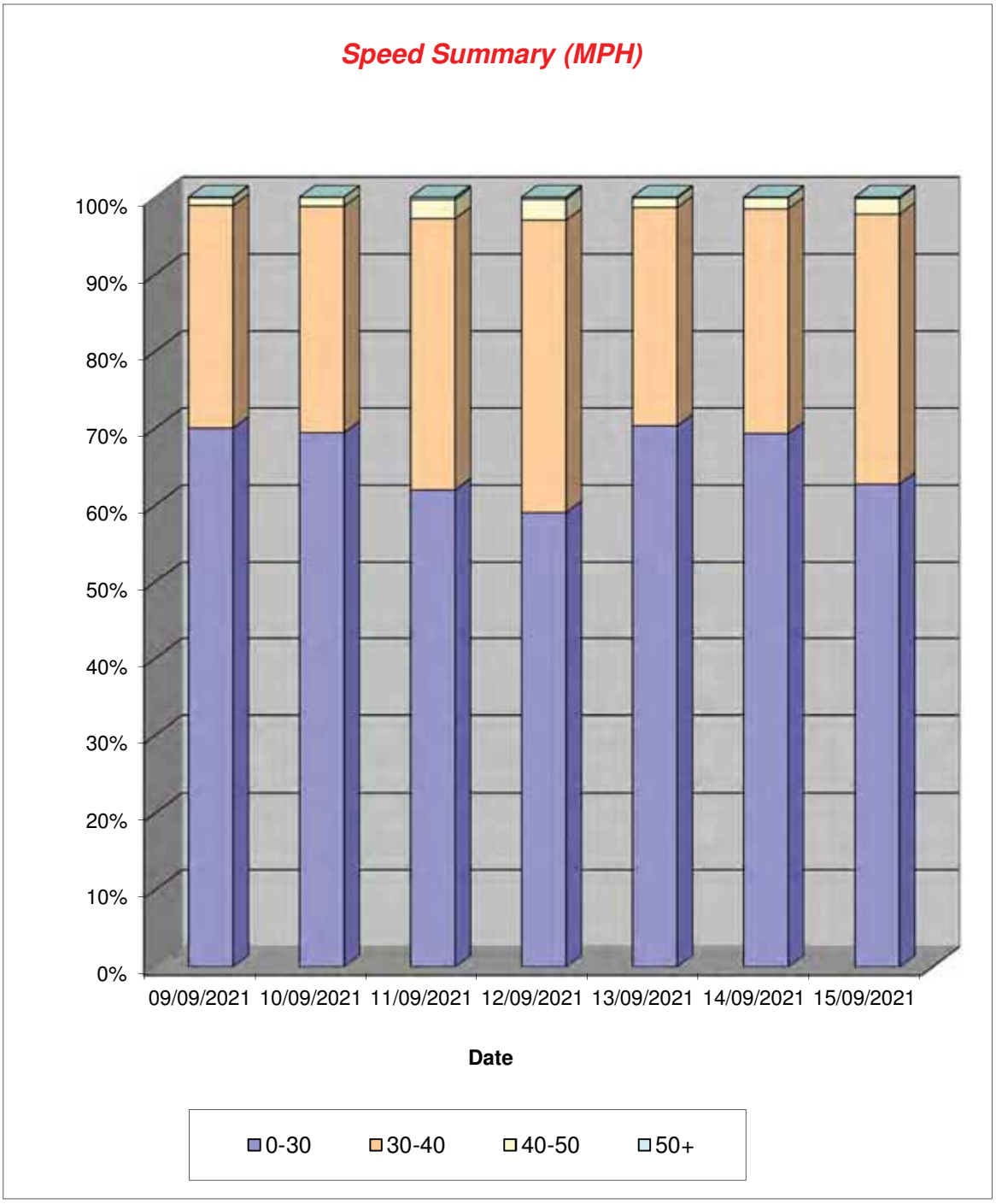

Rhosrobin ATC, B5425 Llay New Road

Produced by Road Data Services Ltd.

Channel 2 - Southbound | **Vehicle Class** | **Week 1**

Classes / Day / Time	Car / LGV / Caravan - 1	OGV1 / Bus - 2,3,5,6,7,12	OGV2 - 4,8,9,10,11,13	TOTAL - 1-13
09/09/2021				
7-19	4070	118	16	4204
6-22	4502	128	16	4646
6-24	4568	130	16	4714
0-24	4648	130	17	4795
10/09/2021				
7-19	3992	106	7	4105
6-22	4552	115	7	4674
6-24	4714	115	8	4837
0-24	4793	117	8	4918
11/09/2021				
7-19	2891	42	1	2934
6-22	3288	47	2	3337
6-24	3391	48	2	3441
0-24	3516	50	2	3568
12/09/2021				
7-19	1980	16	2	1998
6-22	2248	18	2	2268
6-24	2294	18	2	2314
0-24	2400	20	2	2422
13/09/2021				
7-19	3729	77	7	3813
6-22	4098	84	7	4189
6-24	4175	85	7	4267
0-24	4234	87	8	4329
14/09/2021				
7-19	3790	72	13	3875
6-22	4271	78	13	4362
6-24	4365	79	13	4457
0-24	4437	80	13	4530
15/09/2021				
7-19	3631	105	11	3747
6-22	4073	111	11	4195
6-24	4162	111	11	4284
0-24	4275	114	12	4401

Average				
7-19	3440	77	8	3525
6-22	3862	83	8	3953
6-24	3953	84	8	4045
0-24	4043	85	9	4138

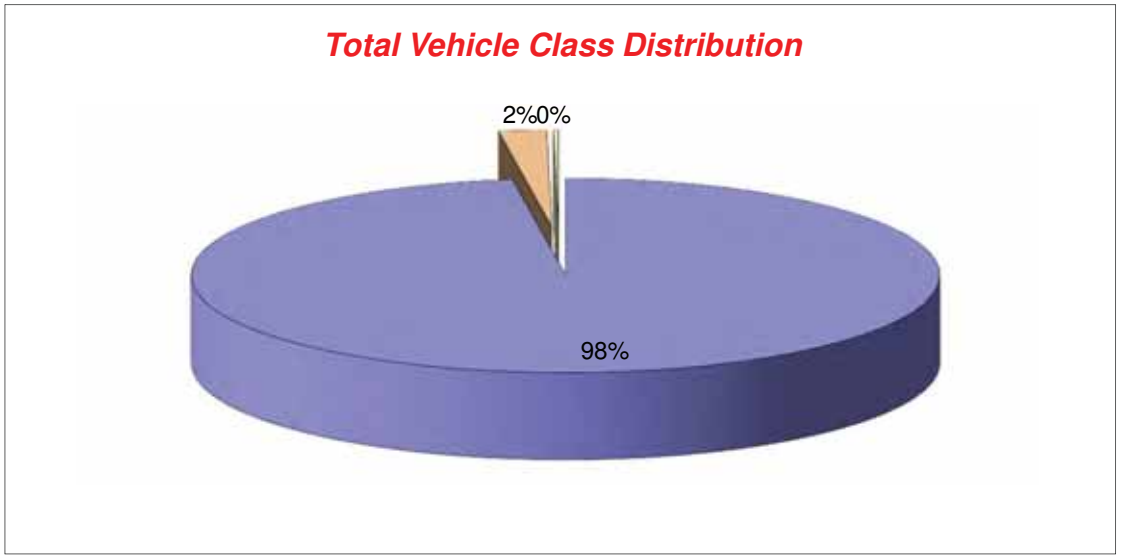

APPENDIX F

TRICS DATA

TRIP RATE CALCULATION SELECTION PARAMETERS:

Land Use : 03 - RESIDENTIAL
Category : A - HOUSES PRIVATELY OWNED

VEHICLES

Selected regions and areas:

02	**SOUTH EAST**		
	EX	ESSEX	1 days
	SC	SURREY	1 days
	WS	WEST SUSSEX	1 days
03	**SOUTH WEST**		
	CW	CORNWALL	1 days
	DC	DORSET	1 days
04	**EAST ANGLIA**		
	NF	NORFOLK	1 days
	SF	SUFFOLK	2 days
05	**EAST MIDLANDS**		
	LN	LINCOLNSHIRE	2 days
06	**WEST MIDLANDS**		
	SH	SHROPSHIRE	2 days
	WM	WEST MIDLANDS	1 days
07	**YORKSHIRE & NORTH LINCOLNSHIRE**		
	NE	NORTH EAST LINCOLNSHIRE	1 days
	NY	NORTH YORKSHIRE	3 days
	SY	SOUTH YORKSHIRE	1 days
08	**NORTH WEST**		
	CH	CHESHIRE	2 days
09	**NORTH**		
	CB	CUMBRIA	1 days
10	**WALES**		
	CF	CARDIFF	1 days
11	**SCOTLAND**		
	AD	ABERDEEN CITY	1 days
	FA	FALKIRK	1 days
	FI	FIFE	1 days
	HI	HIGHLAND	1 days
	SR	STIRLING	1 days

This section displays the number of survey days per TRICS® sub-region in the selected set

Filtering Stage 2 selection:

This data displays the chosen trip rate parameter and its selected range. Only sites that fall within the parameter range are included in the trip rate calculation.

Parameter:	Number of dwellings
Actual Range:	51 to 432 (units:)
Range Selected by User:	50 to 1000 (units:)

Public Transport Provision:
Selection by: Include all surveys

Date Range: 01/01/07 to 11/12/14

This data displays the range of survey dates selected. Only surveys that were conducted within this date range are included in the trip rate calculation.

Selected survey days:

Monday	7 days
Tuesday	6 days
Wednesday	4 days
Thursday	5 days
Friday	5 days

This data displays the number of selected surveys by day of the week.

Selected survey types:

Manual count	27 days
Directional ATC Count	0 days

This data displays the number of manual classified surveys and the number of unclassified ATC surveys, the total adding up to the overall number of surveys in the selected set. Manual surveys are undertaken using staff, whilst ATC surveys are undertaking using machines.

Selected Locations:

Suburban Area (PPS6 Out of Centre)	14
Edge of Town	13

This data displays the number of surveys per main location category within the selected set. The main location categories consist of Free Standing, Edge of Town, Suburban Area, Neighbourhood Centre, Edge of Town Centre, Town Centre and Not Known.

Selected Location Sub Categories:

Residential Zone	22
No Sub Category	5

This data displays the number of surveys per location sub-category within the selected set. The location sub-categories consist of Commercial Zone, Industrial Zone, Development Zone, Residential Zone, Retail Zone, Built-Up Zone, Village, Out of Town, High Street and No Sub Category.

Filtering Stage 3 selection:

Use Class:

C3	27 days

This data displays the number of surveys per Use Class classification within the selected set. The Use Classes Order 2005 has been used for this purpose, which can be found within the Library module of TRICS®.

Filtering Stage 3 selection (Cont.):

Population within 1 mile:

1,001 to 5,000	2 days
5,001 to 10,000	6 days
10,001 to 15,000	4 days
15,001 to 20,000	9 days
20,001 to 25,000	5 days
25,001 to 50,000	1 days

This data displays the number of selected surveys within stated 1-mile radii of population.

Population within 5 miles:

5,001 to 25,000	1 days
25,001 to 50,000	3 days
50,001 to 75,000	3 days
75,001 to 100,000	5 days
100,001 to 125,000	6 days
125,001 to 250,000	6 days
250,001 to 500,000	3 days

This data displays the number of selected surveys within stated 5-mile radii of population.

Car ownership within 5 miles:

0.6 to 1.0	6 days
1.1 to 1.5	21 days

This data displays the number of selected surveys within stated ranges of average cars owned per residential dwelling, within a radius of 5-miles of selected survey sites.

Travel Plan:

Yes	1 days
No	26 days

This data displays the number of surveys within the selected set that were undertaken at sites with Travel Plans in place, and the number of surveys that were undertaken at sites without Travel Plans.

LIST OF SITES relevant to selection parameters

1 AD-03-A-01 SEMI-DETACHED ABERDEEN CITY
SPRINGFIELD ROAD

ABERDEEN
Suburban Area (PPS6 Out of Centre)
Residential Zone
Total Number of dwellings: 59
Survey date: FRIDAY 18/05/12 Survey Type: MANUAL

2 CB-03-A-04 SEMI DETACHED CUMBRIA
MOORCLOSE ROAD
SALTERBACK
WORKINGTON
Edge of Town
No Sub Category
Total Number of dwellings: 82
Survey date: FRIDAY 24/04/09 Survey Type: MANUAL

3 CF-03-A-02 MIXED HOUSES CARDIFF
DROPE ROAD

CARDIFF
Edge of Town
Residential Zone
Total Number of dwellings: 196
Survey date: FRIDAY 05/10/07 Survey Type: MANUAL

4 CH-03-A-02 HOUSES/FLATS CHESHIRE
SYDNEY ROAD

CREWE
Edge of Town
Residential Zone
Total Number of dwellings: 174
Survey date: TUESDAY 14/10/08 Survey Type: MANUAL

5 CH-03-A-06 SEMI-DET./BUNGALOWS CHESHIRE
CREWE ROAD

CREWE
Suburban Area (PPS6 Out of Centre)
No Sub Category
Total Number of dwellings: 129
Survey date: TUESDAY 14/10/08 Survey Type: MANUAL

6 CW-03-A-02 SEMI D./DETATCHED CORNWALL
BOSVEAN GARDENS

TRURO
Suburban Area (PPS6 Out of Centre)
Residential Zone
Total Number of dwellings: 73
Survey date: TUESDAY 18/09/07 Survey Type: MANUAL

7 DC-03-A-01 DETACHED DORSET
ISAACS CLOSE

POOLE
Suburban Area (PPS6 Out of Centre)
Residential Zone
Total Number of dwellings: 51
Survey date: WEDNESDAY 16/07/08 Survey Type: MANUAL

LIST OF SITES relevant to selection parameters (Cont.)

8 **EX-03-A-01** **SEMI-DET.** **ESSEX**
MILTON ROAD
CORRINGHAM
STANFORD-LE-HOPE
Edge of Town
Residential Zone
Total Number of dwellings: 237
Survey date: TUESDAY *13/05/08* *Survey Type: MANUAL*

9 **FA-03-A-02** **MIXED HOUSES** **FALKIRK**
ROSEBANK AVENUE & SPRINGFIELD DRIVE

FALKIRK
Suburban Area (PPS6 Out of Centre)
Residential Zone
Total Number of dwellings: 161
Survey date: WEDNESDAY *29/05/13* *Survey Type: MANUAL*

10 **FI-03-A-03** **MIXED HOUSES** **FIFE**
WOODMILL ROAD

DUNFERMLINE
Edge of Town
Residential Zone
Total Number of dwellings: 155
Survey date: MONDAY *30/04/07* *Survey Type: MANUAL*

11 **HI-03-A-14** **SEMI-DETACHED** **HIGHLAND**
CALEDONIAN ROAD
DALNEIGH
INVERNESS
Suburban Area (PPS6 Out of Centre)
Residential Zone
Total Number of dwellings: 73
Survey date: FRIDAY *13/05/11* *Survey Type: MANUAL*

12 **LN-03-A-01** **MIXED HOUSES** **LINCOLNSHIRE**
BRANT ROAD
BRACEBRIDGE
LINCOLN
Edge of Town
Residential Zone
Total Number of dwellings: 150
Survey date: TUESDAY *15/05/07* *Survey Type: MANUAL*

13 **LN-03-A-02** **MIXED HOUSES** **LINCOLNSHIRE**
HYKEHAM ROAD

LINCOLN
Suburban Area (PPS6 Out of Centre)
Residential Zone
Total Number of dwellings: 186
Survey date: MONDAY *14/05/07* *Survey Type: MANUAL*

14 **NE-03-A-02** **SEMI DETACHED & DETACHED** **NORTH EAST LINCOLNSHIRE**
HANOVER WALK

SCUNTHORPE
Edge of Town
No Sub Category
Total Number of dwellings: 432
Survey date: MONDAY *12/05/14* *Survey Type: MANUAL*

LIST OF SITES relevant to selection parameters (Cont.)

15 NF-03-A-02 HOUSES & FLATS NORFOLK
DEREHAM ROAD

NORWICH
Suburban Area (PPS6 Out of Centre)
Residential Zone
Total Number of dwellings: 98
Survey date: MONDAY 22/10/12 Survey Type: MANUAL

16 NY-03-A-06 BUNGALOWS & SEMI DET. NORTH YORKSHIRE
HORSEFAIR

BOROUGHBRIDGE
Suburban Area (PPS6 Out of Centre)
Residential Zone
Total Number of dwellings: 115
Survey date: FRIDAY 14/10/11 Survey Type: MANUAL

17 NY-03-A-09 MIXED HOUSING NORTH YORKSHIRE
GRAMMAR SCHOOL LANE

NORTHALLERTON
Suburban Area (PPS6 Out of Centre)
Residential Zone
Total Number of dwellings: 52
Survey date: MONDAY 16/09/13 Survey Type: MANUAL

18 NY-03-A-10 HOUSES AND FLATS NORTH YORKSHIRE
BOROUGHBRIDGE ROAD

RIPON
Edge of Town
No Sub Category
Total Number of dwellings: 71
Survey date: TUESDAY 17/09/13 Survey Type: MANUAL

19 SC-03-A-04 DETACHED & TERRACED SURREY
HIGH ROAD

BYFLEET
Edge of Town
Residential Zone
Total Number of dwellings: 71
Survey date: THURSDAY 23/01/14 Survey Type: MANUAL

20 SF-03-A-01 SEMI DETACHED SUFFOLK
A1156 FELIXSTOWE ROAD
RACECOURSE
IPSWICH
Suburban Area (PPS6 Out of Centre)
Residential Zone
Total Number of dwellings: 77
Survey date: WEDNESDAY 23/05/07 Survey Type: MANUAL

21 SF-03-A-02 SEMI DET./TERRACED SUFFOLK
STOKE PARK DRIVE
MAIDENHALL
IPSWICH
Edge of Town
Residential Zone
Total Number of dwellings: 230
Survey date: THURSDAY 24/05/07 Survey Type: MANUAL

LIST OF SITES relevant to selection parameters (Cont.)

22 SH-03-A-04 TERRACED SHROPSHIRE
ST MICHAEL'S STREET

SHREWSBURY
Suburban Area (PPS6 Out of Centre)
No Sub Category
Total Number of dwellings: 108
Survey date: THURSDAY 11/06/09 Survey Type: MANUAL

23 SH-03-A-05 SEMI-DETACHED/TERRACED SHROPSHIRE
SANDCROFT
SUTTON HILL
TELFORD
Edge of Town
Residential Zone
Total Number of dwellings: 54
Survey date: THURSDAY 24/10/13 Survey Type: MANUAL

24 SR-03-A-01 DETACHED STIRLING
BENVIEW

STIRLING
Suburban Area (PPS6 Out of Centre)
Residential Zone
Total Number of dwellings: 115
Survey date: MONDAY 23/04/07 Survey Type: MANUAL

25 SY-03-A-01 SEMI DETACHED HOUSES SOUTH YORKSHIRE
A19 BENTLEY ROAD
BENTLEY RISE
DONCASTER
Suburban Area (PPS6 Out of Centre)
Residential Zone
Total Number of dwellings: 54
Survey date: WEDNESDAY 18/09/13 Survey Type: MANUAL

26 WM-03-A-03 MIXED HOUSING WEST MIDLANDS
BASELEY WAY
ROWLEYS GREEN
COVENTRY
Edge of Town
Residential Zone
Total Number of dwellings: 84
Survey date: MONDAY 24/09/07 Survey Type: MANUAL

27 WS-03-A-04 MIXED HOUSES WEST SUSSEX
HILLS FARM LANE
BROADBRIDGE HEATH
HORSHAM
Edge of Town
Residential Zone
Total Number of dwellings: 151
Survey date: THURSDAY 11/12/14 Survey Type: MANUAL

This section provides a list of all survey sites and days in the selected set. For each individual survey site, it displays a unique site reference code and site address, the selected trip rate calculation parameter and its value, the day of the week and date of each survey, and whether the survey was a manual classified count or an ATC count.

RANK ORDER for Land Use 03 - RESIDENTIAL/A - HOUSES PRIVATELY OWNED

VEHICLES

Ranking Type: **TOTALS** Time Range: 08:00-09:00

15th Percentile = No. **23** CH-03-A-06 Tot: 0.403

85th Percentile = No. **5** FI-03-A-03 Tot: 0.722

Median Values		Mean Values	
Arrivals:	0.096	Arrivals:	0.143
Departures:	0.400	Departures:	0.379
Totals:	0.496	Totals:	0.522

Rank	Site-Ref	Description	Town/City	Area	DWELLS	Day	Date	Trip Rate (Sorted by Totals)			Park Spaces
								Arrivals	Departures	Totals	Per Dwelling
1	SR-03-A-01	DETACHED	STIRLING	STIRLING	115	Mon	23/04/07	0.165	0.678	0.843	2.86
2	SH-03-A-04	TERRACED	SHREWSBURY	SHROPSHIRE	108	Thu	11/06/09	0.287	0.454	0.741	1.86
3	SF-03-A-02	SEMI DET./TERR	IPSWICH	SUFFOLK	230	Thu	24/05/07	0.243	0.491	0.734	2.48
4	WM-03-A-03	MIXED HOUSING	COVENTRY	WEST MIDLANDS	84	Mon	24/09/07	0.321	0.405	0.726	2.60
5	**FI-03-A-03**	**MIXED HOUSES**	**DUNFERMLINE**	**FIFE**	**155**	**Mon**	**30/04/07**	**0.174**	**0.548**	**0.722**	**2.84**
6	NY-03-A-10	HOUSES AND FLA	RIPON	NORTH YORKSHIRE	71	Tue	17/09/13	0.183	0.521	0.704	0.83
7	EX-03-A-01	SEMI-DET.	STANFORD-LE-HOPE	ESSEX	237	Tue	13/05/08	0.177	0.523	0.700	2.53
8	LN-03-A-01	MIXED HOUSES	LINCOLN	LINCOLNSHIRE	150	Tue	15/05/07	0.187	0.440	0.627	4.91
9	LN-03-A-02	MIXED HOUSES	LINCOLN	LINCOLNSHIRE	186	Mon	14/05/07	0.183	0.425	0.608	4.13
10	CB-03-A-04	SEMI DETACHED	WORKINGTON	CUMBRIA	82	Fri	24/04/09	0.183	0.366	0.549	1.74
11	CF-03-A-02	MIXED HOUSES	CARDIFF	CARDIFF	196	Fri	05/10/07	0.107	0.413	0.520	1.98
12	SF-03-A-01	SEMI DETACHED	IPSWICH	SUFFOLK	77	Wed	23/05/07	0.104	0.416	0.520	2.22
13	SH-03-A-05	SEMI-DETACHED/	TELFORD	SHROPSHIRE	54	Thu	24/10/13	0.130	0.370	0.500	1.17
14	NY-03-A-06	BUNGALOWS & SE	BOROUGHBRIDGE	NORTH YORKSHIRE	115	Fri	14/10/11	0.096	0.400	0.496	3.50
15	SC-03-A-04	DETACHED & TER	BYFLEET	SURREY	71	Thu	23/01/14	0.141	0.352	0.493	2.49
16	CH-03-A-02	HOUSES/FLATS	CREWE	CHESHIRE	174	Tue	14/10/08	0.103	0.374	0.477	2.81
17	DC-03-A-01	DETACHED	POOLE	DORSET	51	Wed	16/07/08	0.098	0.373	0.471	3.00
18	NF-03-A-02	HOUSES & FLATS	NORWICH	NORFOLK	98	Mon	22/10/12	0.122	0.347	0.469	2.24
19	SY-03-A-01	SEMI DETACHED	DONCASTER	SOUTH YORKSHIRE	54	Wed	18/09/13	0.056	0.389	0.445	1.13
20	CW-03-A-02	SEMI D./DETATC	TRURO	CORNWALL	73	Tue	18/09/07	0.096	0.329	0.425	3.73
21	NE-03-A-02	SEMI DETACHED	SCUNTHORPE	NORTH EAST LINCOLNS	432	Mon	12/05/14	0.067	0.354	0.421	1.00
22	WS-03-A-04	MIXED HOUSES	HORSHAM	WEST SUSSEX	151	Thu	11/12/14	0.139	0.278	0.417	2.28
23	**CH-03-A-06**	**SEMI-DET./BUNG**	**CREWE**	**CHESHIRE**	**129**	**Tue**	**14/10/08**	**0.163**	**0.240**	**0.403**	**2.59**
24	NY-03-A-09	MIXED HOUSING	NORTHALLERTON	NORTH YORKSHIRE	52	Mon	16/09/13	0.173	0.212	0.385	2.60
25	FA-03-A-02	MIXED HOUSES	FALKIRK	FALKIRK	161	Wed	29/05/13	0.062	0.280	0.342	1.66
26	HI-03-A-14	SEMI-DETACHED	INVERNESS	HIGHLAND	73	Fri	13/05/11	0.096	0.164	0.260	2.05
27	AD-03-A-01	SEMI-DETACHED	ABERDEEN	ABERDEEN CITY	59	Fri	18/05/12	0.017	0.085	0.102	2.68

This section displays actual (not average) trip rates for each of the survey days in the selected set, and ranks them in order of relative trip rate intensity, for a given time period (or peak period irrespective of time) selected by the user. The count type and direction are both displayed just above the table, along with the rows within the table representing the 85th and 15th percentile trip rate figures (highlighted in bold within the table itself).

The table itself displays details of each individual survey, alongside arrivals, departures and totals trip rates, sorted by whichever of the three directional options has been chosen by the user. As with the preceeding trip rate calculation results table, the trip rates shown are per the calculation factor (e.g. per 100m2 GFA, per employee, per hectare, etc). Note that if the peak period option has been selected (as opposed to a specific chosen time period), the peak period for each individual survey day in the table is also displayed.

TRIP RATE CALCULATION SELECTION PARAMETERS:

Land Use : 03 - RESIDENTIAL
Category : A - HOUSES PRIVATELY OWNED

VEHICLES

Selected regions and areas:

02	**SOUTH EAST**		
	EX	ESSEX	1 days
	SC	SURREY	1 days
	WS	WEST SUSSEX	1 days
03	**SOUTH WEST**		
	CW	CORNWALL	1 days
	DC	DORSET	1 days
04	**EAST ANGLIA**		
	NF	NORFOLK	1 days
	SF	SUFFOLK	2 days
05	**EAST MIDLANDS**		
	LN	LINCOLNSHIRE	2 days
06	**WEST MIDLANDS**		
	SH	SHROPSHIRE	2 days
	WM	WEST MIDLANDS	1 days
07	**YORKSHIRE & NORTH LINCOLNSHIRE**		
	NE	NORTH EAST LINCOLNSHIRE	1 days
	NY	NORTH YORKSHIRE	3 days
	SY	SOUTH YORKSHIRE	1 days
08	**NORTH WEST**		
	CH	CHESHIRE	2 days
09	**NORTH**		
	CB	CUMBRIA	1 days
10	**WALES**		
	CF	CARDIFF	1 days
11	**SCOTLAND**		
	AD	ABERDEEN CITY	1 days
	FA	FALKIRK	1 days
	FI	FIFE	1 days
	HI	HIGHLAND	1 days
	SR	STIRLING	1 days

This section displays the number of survey days per TRICS® sub-region in the selected set

Filtering Stage 2 selection:

This data displays the chosen trip rate parameter and its selected range. Only sites that fall within the parameter range are included in the trip rate calculation.

Parameter:	Number of dwellings
Actual Range:	51 to 432 (units:)
Range Selected by User:	50 to 1000 (units:)

Public Transport Provision:
Selection by: Include all surveys

Date Range: 01/01/07 to 11/12/14

This data displays the range of survey dates selected. Only surveys that were conducted within this date range are included in the trip rate calculation.

Selected survey days:

Monday	7 days
Tuesday	6 days
Wednesday	4 days
Thursday	5 days
Friday	5 days

This data displays the number of selected surveys by day of the week.

Selected survey types:

Manual count	27 days
Directional ATC Count	0 days

This data displays the number of manual classified surveys and the number of unclassified ATC surveys, the total adding up to the overall number of surveys in the selected set. Manual surveys are undertaken using staff, whilst ATC surveys are undertaking using machines.

Selected Locations:

Suburban Area (PPS6 Out of Centre)	14
Edge of Town	13

This data displays the number of surveys per main location category within the selected set. The main location categories consist of Free Standing, Edge of Town, Suburban Area, Neighbourhood Centre, Edge of Town Centre, Town Centre and Not Known.

Selected Location Sub Categories:

Residential Zone	22
No Sub Category	5

This data displays the number of surveys per location sub-category within the selected set. The location sub-categories consist of Commercial Zone, Industrial Zone, Development Zone, Residential Zone, Retail Zone, Built-Up Zone, Village, Out of Town, High Street and No Sub Category.

Filtering Stage 3 selection:

Use Class:

C3	27 days

This data displays the number of surveys per Use Class classification within the selected set. The Use Classes Order 2005 has been used for this purpose, which can be found within the Library module of TRICS®.

Filtering Stage 3 selection (Cont.):

Population within 1 mile:

1,001 to 5,000	2 days
5,001 to 10,000	6 days
10,001 to 15,000	4 days
15,001 to 20,000	9 days
20,001 to 25,000	5 days
25,001 to 50,000	1 days

This data displays the number of selected surveys within stated 1-mile radii of population.

Population within 5 miles:

5,001 to 25,000	1 days
25,001 to 50,000	3 days
50,001 to 75,000	3 days
75,001 to 100,000	5 days
100,001 to 125,000	6 days
125,001 to 250,000	6 days
250,001 to 500,000	3 days

This data displays the number of selected surveys within stated 5-mile radii of population.

Car ownership within 5 miles:

0.6 to 1.0	6 days
1.1 to 1.5	21 days

This data displays the number of selected surveys within stated ranges of average cars owned per residential dwelling, within a radius of 5-miles of selected survey sites.

Travel Plan:

Yes	1 days
No	26 days

This data displays the number of surveys within the selected set that were undertaken at sites with Travel Plans in place, and the number of surveys that were undertaken at sites without Travel Plans.

LIST OF SITES relevant to selection parameters

1 AD-03-A-01 SEMI-DETACHED ABERDEEN CITY
SPRINGFIELD ROAD

ABERDEEN
Suburban Area (PPS6 Out of Centre)
Residential Zone
Total Number of dwellings: 59
Survey date: FRIDAY 18/05/12 Survey Type: MANUAL

2 CB-03-A-04 SEMI DETACHED CUMBRIA
MOORCLOSE ROAD
SALTERBACK
WORKINGTON
Edge of Town
No Sub Category
Total Number of dwellings: 82
Survey date: FRIDAY 24/04/09 Survey Type: MANUAL

3 CF-03-A-02 MIXED HOUSES CARDIFF
DROPE ROAD

CARDIFF
Edge of Town
Residential Zone
Total Number of dwellings: 196
Survey date: FRIDAY 05/10/07 Survey Type: MANUAL

4 CH-03-A-02 HOUSES/FLATS CHESHIRE
SYDNEY ROAD

CREWE
Edge of Town
Residential Zone
Total Number of dwellings: 174
Survey date: TUESDAY 14/10/08 Survey Type: MANUAL

5 CH-03-A-06 SEMI-DET./BUNGALOWS CHESHIRE
CREWE ROAD

CREWE
Suburban Area (PPS6 Out of Centre)
No Sub Category
Total Number of dwellings: 129
Survey date: TUESDAY 14/10/08 Survey Type: MANUAL

6 CW-03-A-02 SEMI D./DETATCHED CORNWALL
BOSVEAN GARDENS

TRURO
Suburban Area (PPS6 Out of Centre)
Residential Zone
Total Number of dwellings: 73
Survey date: TUESDAY 18/09/07 Survey Type: MANUAL

7 DC-03-A-01 DETACHED DORSET
ISAACS CLOSE

POOLE
Suburban Area (PPS6 Out of Centre)
Residential Zone
Total Number of dwellings: 51
Survey date: WEDNESDAY 16/07/08 Survey Type: MANUAL

LIST OF SITES relevant to selection parameters (Cont.)

8 **EX-03-A-01** **SEMI-DET.** **ESSEX**
MILTON ROAD
CORRINGHAM
STANFORD-LE-HOPE
Edge of Town
Residential Zone
Total Number of dwellings: 237
Survey date: TUESDAY *13/05/08* *Survey Type: MANUAL*

9 **FA-03-A-02** **MIXED HOUSES** **FALKIRK**
ROSEBANK AVENUE & SPRINGFIELD DRIVE

FALKIRK
Suburban Area (PPS6 Out of Centre)
Residential Zone
Total Number of dwellings: 161
Survey date: WEDNESDAY *29/05/13* *Survey Type: MANUAL*

10 **FI-03-A-03** **MIXED HOUSES** **FIFE**
WOODMILL ROAD

DUNFERMLINE
Edge of Town
Residential Zone
Total Number of dwellings: 155
Survey date: MONDAY *30/04/07* *Survey Type: MANUAL*

11 **HI-03-A-14** **SEMI-DETACHED** **HIGHLAND**
CALEDONIAN ROAD
DALNEIGH
INVERNESS
Suburban Area (PPS6 Out of Centre)
Residential Zone
Total Number of dwellings: 73
Survey date: FRIDAY *13/05/11* *Survey Type: MANUAL*

12 **LN-03-A-01** **MIXED HOUSES** **LINCOLNSHIRE**
BRANT ROAD
BRACEBRIDGE
LINCOLN
Edge of Town
Residential Zone
Total Number of dwellings: 150
Survey date: TUESDAY *15/05/07* *Survey Type: MANUAL*

13 **LN-03-A-02** **MIXED HOUSES** **LINCOLNSHIRE**
HYKEHAM ROAD

LINCOLN
Suburban Area (PPS6 Out of Centre)
Residential Zone
Total Number of dwellings: 186
Survey date: MONDAY *14/05/07* *Survey Type: MANUAL*

14 **NE-03-A-02** **SEMI DETACHED & DETACHED** **NORTH EAST LINCOLNSHIRE**
HANOVER WALK

SCUNTHORPE
Edge of Town
No Sub Category
Total Number of dwellings: 432
Survey date: MONDAY *12/05/14* *Survey Type: MANUAL*

LIST OF SITES relevant to selection parameters (Cont.)

15 NF-03-A-02 HOUSES & FLATS NORFOLK
DEREHAM ROAD

NORWICH
Suburban Area (PPS6 Out of Centre)
Residential Zone
Total Number of dwellings: 98
Survey date: MONDAY 22/10/12 Survey Type: MANUAL

16 NY-03-A-06 BUNGALOWS & SEMI DET. NORTH YORKSHIRE
HORSEFAIR

BOROUGHBRIDGE
Suburban Area (PPS6 Out of Centre)
Residential Zone
Total Number of dwellings: 115
Survey date: FRIDAY 14/10/11 Survey Type: MANUAL

17 NY-03-A-09 MIXED HOUSING NORTH YORKSHIRE
GRAMMAR SCHOOL LANE

NORTHALLERTON
Suburban Area (PPS6 Out of Centre)
Residential Zone
Total Number of dwellings: 52
Survey date: MONDAY 16/09/13 Survey Type: MANUAL

18 NY-03-A-10 HOUSES AND FLATS NORTH YORKSHIRE
BOROUGHBRIDGE ROAD

RIPON
Edge of Town
No Sub Category
Total Number of dwellings: 71
Survey date: TUESDAY 17/09/13 Survey Type: MANUAL

19 SC-03-A-04 DETACHED & TERRACED SURREY
HIGH ROAD

BYFLEET
Edge of Town
Residential Zone
Total Number of dwellings: 71
Survey date: THURSDAY 23/01/14 Survey Type: MANUAL

20 SF-03-A-01 SEMI DETACHED SUFFOLK
A1156 FELIXSTOWE ROAD
RACECOURSE
IPSWICH
Suburban Area (PPS6 Out of Centre)
Residential Zone
Total Number of dwellings: 77
Survey date: WEDNESDAY 23/05/07 Survey Type: MANUAL

21 SF-03-A-02 SEMI DET./TERRACED SUFFOLK
STOKE PARK DRIVE
MAIDENHALL
IPSWICH
Edge of Town
Residential Zone
Total Number of dwellings: 230
Survey date: THURSDAY 24/05/07 Survey Type: MANUAL

LIST OF SITES relevant to selection parameters (Cont.)

22 SH-03-A-04 TERRACED SHROPSHIRE
ST MICHAEL'S STREET

SHREWSBURY
Suburban Area (PPS6 Out of Centre)
No Sub Category
Total Number of dwellings: 108
Survey date: THURSDAY 11/06/09 Survey Type: MANUAL

23 SH-03-A-05 SEMI-DETACHED/TERRACED SHROPSHIRE
SANDCROFT
SUTTON HILL
TELFORD
Edge of Town
Residential Zone
Total Number of dwellings: 54
Survey date: THURSDAY 24/10/13 Survey Type: MANUAL

24 SR-03-A-01 DETACHED STIRLING
BENVIEW

STIRLING
Suburban Area (PPS6 Out of Centre)
Residential Zone
Total Number of dwellings: 115
Survey date: MONDAY 23/04/07 Survey Type: MANUAL

25 SY-03-A-01 SEMI DETACHED HOUSES SOUTH YORKSHIRE
A19 BENTLEY ROAD
BENTLEY RISE
DONCASTER
Suburban Area (PPS6 Out of Centre)
Residential Zone
Total Number of dwellings: 54
Survey date: WEDNESDAY 18/09/13 Survey Type: MANUAL

26 WM-03-A-03 MIXED HOUSING WEST MIDLANDS
BASELEY WAY
ROWLEYS GREEN
COVENTRY
Edge of Town
Residential Zone
Total Number of dwellings: 84
Survey date: MONDAY 24/09/07 Survey Type: MANUAL

27 WS-03-A-04 MIXED HOUSES WEST SUSSEX
HILLS FARM LANE
BROADBRIDGE HEATH
HORSHAM
Edge of Town
Residential Zone
Total Number of dwellings: 151
Survey date: THURSDAY 11/12/14 Survey Type: MANUAL

This section provides a list of all survey sites and days in the selected set. For each individual survey site, it displays a unique site reference code and site address, the selected trip rate calculation parameter and its value, the day of the week and date of each survey, and whether the survey was a manual classified count or an ATC count.

RANK ORDER for Land Use 03 - RESIDENTIAL/A - HOUSES PRIVATELY OWNED

VEHICLES

Ranking Type: **TOTALS** Time Range: 16:00-17:00

15th Percentile = No. **23** CH-03-A-06 Tot: 0.364

85th Percentile = No. **5** CF-03-A-02 Tot: 0.633

Median Values		Mean Values	
Arrivals:	0.321	Arrivals:	0.290
Departures:	0.155	Departures:	0.182
Totals:	0.476	Totals:	0.472

Rank	Site-Ref	Description	Town/City	Area	DWELLS	Day	Date	Trip Rate (Sorted by Totals)			Park Spaces
								Arrivals	Departures	Totals	Per Dwelling
1	FI-03-A-03	MIXED HOUSES	DUNFERMLINE	FIFE	155	Mon	30/04/07	0.426	0.252	0.678	2.84
2	SR-03-A-01	DETACHED	STIRLING	STIRLING	115	Mon	23/04/07	0.435	0.217	0.652	2.86
3	LN-03-A-02	MIXED HOUSES	LINCOLN	LINCOLNSHIRE	186	Mon	14/05/07	0.419	0.231	0.650	4.13
4	EX-03-A-01	SEMI-DET.	STANFORD-LE-HOPE	ESSEX	237	Tue	13/05/08	0.405	0.232	0.637	2.53
5	**CF-03-A-02**	**MIXED HOUSES**	**CARDIFF**	**CARDIFF**	**196**	**Fri**	**05/10/07**	**0.388**	**0.245**	**0.633**	**1.98**
6	CW-03-A-02	SEMI D./DETATC	TRURO	CORNWALL	73	Tue	18/09/07	0.370	0.192	0.562	3.73
7	CB-03-A-04	SEMI DETACHED	WORKINGTON	CUMBRIA	82	Fri	24/04/09	0.354	0.207	0.561	1.74
8	SF-03-A-02	SEMI DET./TERR	IPSWICH	SUFFOLK	230	Thu	24/05/07	0.296	0.213	0.509	2.48
9	HI-03-A-14	SEMI-DETACHED	INVERNESS	HIGHLAND	73	Fri	13/05/11	0.247	0.260	0.507	2.05
10	FA-03-A-02	MIXED HOUSES	FALKIRK	FALKIRK	161	Wed	29/05/13	0.317	0.180	0.497	1.66
11	CH-03-A-02	HOUSES/FLATS	CREWE	CHESHIRE	174	Tue	14/10/08	0.293	0.195	0.488	2.81
12	SH-03-A-05	SEMI-DETACHED/	TELFORD	SHROPSHIRE	54	Thu	24/10/13	0.333	0.148	0.481	1.17
13	NY-03-A-10	HOUSES AND FLA	RIPON	NORTH YORKSHIRE	71	Tue	17/09/13	0.310	0.169	0.479	0.83
14	WM-03-A-03	MIXED HOUSING	COVENTRY	WEST MIDLANDS	84	Mon	24/09/07	0.321	0.155	0.476	2.60
15	DC-03-A-01	DETACHED	POOLE	DORSET	51	Wed	16/07/08	0.196	0.275	0.471	3.00
16	NE-03-A-02	SEMI DETACHED	SCUNTHORPE	NORTH EAST LINCOLNS	432	Mon	12/05/14	0.287	0.178	0.465	1.00
17	LN-03-A-01	MIXED HOUSES	LINCOLN	LINCOLNSHIRE	150	Tue	15/05/07	0.267	0.193	0.460	4.91
18	NF-03-A-02	HOUSES & FLATS	NORWICH	NORFOLK	98	Mon	22/10/12	0.235	0.224	0.459	2.24
19	SC-03-A-04	DETACHED & TER	BYFLEET	SURREY	71	Thu	23/01/14	0.254	0.197	0.451	2.49
20	SF-03-A-01	SEMI DETACHED	IPSWICH	SUFFOLK	77	Wed	23/05/07	0.286	0.117	0.403	2.22
21	SH-03-A-04	TERRACED	SHREWSBURY	SHROPSHIRE	108	Thu	11/06/09	0.259	0.130	0.389	1.86
22	NY-03-A-06	BUNGALOWS & SE	BOROUGHBRIDGE	NORTH YORKSHIRE	115	Fri	14/10/11	0.252	0.122	0.374	3.50
23	**CH-03-A-06**	**SEMI-DET./BUNG**	**CREWE**	**CHESHIRE**	**129**	**Tue**	**14/10/08**	**0.240**	**0.124**	**0.364**	**2.59**
24	WS-03-A-04	MIXED HOUSES	HORSHAM	WEST SUSSEX	151	Thu	11/12/14	0.212	0.146	0.358	2.28
25	NY-03-A-09	MIXED HOUSING	NORTHALLERTON	NORTH YORKSHIRE	52	Mon	16/09/13	0.173	0.154	0.327	2.60
26	AD-03-A-01	SEMI-DETACHED	ABERDEEN	ABERDEEN CITY	59	Fri	18/05/12	0.136	0.102	0.238	2.68
27	SY-03-A-01	SEMI DETACHED	DONCASTER	SOUTH YORKSHIRE	54	Wed	18/09/13	0.130	0.056	0.186	1.13

This section displays actual (not average) trip rates for each of the survey days in the selected set, and ranks them in order of relative trip rate intensity, for a given time period (or peak period irrespective of time) selected by the user. The count type and direction are both displayed just above the table, along with the rows within the table representing the 85th and 15th percentile trip rate figures (highlighted in bold within the table itself).

The table itself displays details of each individual survey, alongside arrivals, departures and totals trip rates, sorted by whichever of the three directional options has been chosen by the user. As with the preceeding trip rate calculation results table, the trip rates shown are per the calculation factor (e.g. per 100m2 GFA, per employee, per hectare, etc). Note that if the peak period option has been selected (as opposed to a specific chosen time period), the peak period for each individual survey day in the table is also displayed.

TRIP RATE CALCULATION SELECTION PARAMETERS:

Land Use : 03 - RESIDENTIAL
Category : A - HOUSES PRIVATELY OWNED

VEHICLES

Selected regions and areas:

02	**SOUTH EAST**		
	EX	ESSEX	1 days
	SC	SURREY	1 days
	WS	WEST SUSSEX	1 days
03	**SOUTH WEST**		
	CW	CORNWALL	1 days
	DC	DORSET	1 days
04	**EAST ANGLIA**		
	NF	NORFOLK	1 days
	SF	SUFFOLK	2 days
05	**EAST MIDLANDS**		
	LN	LINCOLNSHIRE	2 days
06	**WEST MIDLANDS**		
	SH	SHROPSHIRE	2 days
	WM	WEST MIDLANDS	1 days
07	**YORKSHIRE & NORTH LINCOLNSHIRE**		
	NE	NORTH EAST LINCOLNSHIRE	1 days
	NY	NORTH YORKSHIRE	3 days
	SY	SOUTH YORKSHIRE	1 days
08	**NORTH WEST**		
	CH	CHESHIRE	2 days
09	**NORTH**		
	CB	CUMBRIA	1 days
10	**WALES**		
	CF	CARDIFF	1 days
11	**SCOTLAND**		
	AD	ABERDEEN CITY	1 days
	FA	FALKIRK	1 days
	FI	FIFE	1 days
	HI	HIGHLAND	1 days
	SR	STIRLING	1 days

This section displays the number of survey days per TRICS® sub-region in the selected set

Filtering Stage 2 selection:

This data displays the chosen trip rate parameter and its selected range. Only sites that fall within the parameter range are included in the trip rate calculation.

Parameter:	Number of dwellings
Actual Range:	51 to 432 (units:)
Range Selected by User:	50 to 1000 (units:)

Public Transport Provision:
Selection by: Include all surveys

Date Range: 01/01/07 to 11/12/14

This data displays the range of survey dates selected. Only surveys that were conducted within this date range are included in the trip rate calculation.

Selected survey days:

Monday	7 days
Tuesday	6 days
Wednesday	4 days
Thursday	5 days
Friday	5 days

This data displays the number of selected surveys by day of the week.

Selected survey types:

Manual count	27 days
Directional ATC Count	0 days

This data displays the number of manual classified surveys and the number of unclassified ATC surveys, the total adding up to the overall number of surveys in the selected set. Manual surveys are undertaken using staff, whilst ATC surveys are undertaking using machines.

Selected Locations:

Suburban Area (PPS6 Out of Centre)	14
Edge of Town	13

This data displays the number of surveys per main location category within the selected set. The main location categories consist of Free Standing, Edge of Town, Suburban Area, Neighbourhood Centre, Edge of Town Centre, Town Centre and Not Known.

Selected Location Sub Categories:

Residential Zone	22
No Sub Category	5

This data displays the number of surveys per location sub-category within the selected set. The location sub-categories consist of Commercial Zone, Industrial Zone, Development Zone, Residential Zone, Retail Zone, Built-Up Zone, Village, Out of Town, High Street and No Sub Category.

Filtering Stage 3 selection:

Use Class:

C3	27 days

This data displays the number of surveys per Use Class classification within the selected set. The Use Classes Order 2005 has been used for this purpose, which can be found within the Library module of TRICS®.

Filtering Stage 3 selection (Cont.):

Population within 1 mile:

1,001 to 5,000	2 days
5,001 to 10,000	6 days
10,001 to 15,000	4 days
15,001 to 20,000	9 days
20,001 to 25,000	5 days
25,001 to 50,000	1 days

This data displays the number of selected surveys within stated 1-mile radii of population.

Population within 5 miles:

5,001 to 25,000	1 days
25,001 to 50,000	3 days
50,001 to 75,000	3 days
75,001 to 100,000	5 days
100,001 to 125,000	6 days
125,001 to 250,000	6 days
250,001 to 500,000	3 days

This data displays the number of selected surveys within stated 5-mile radii of population.

Car ownership within 5 miles:

0.6 to 1.0	6 days
1.1 to 1.5	21 days

This data displays the number of selected surveys within stated ranges of average cars owned per residential dwelling, within a radius of 5-miles of selected survey sites.

Travel Plan:

Yes	1 days
No	26 days

This data displays the number of surveys within the selected set that were undertaken at sites with Travel Plans in place, and the number of surveys that were undertaken at sites without Travel Plans.

LIST OF SITES relevant to selection parameters

1 AD-03-A-01 SEMI-DETACHED ABERDEEN CITY
SPRINGFIELD ROAD

ABERDEEN
Suburban Area (PPS6 Out of Centre)
Residential Zone
Total Number of dwellings: 59
Survey date: FRIDAY 18/05/12 Survey Type: MANUAL

2 CB-03-A-04 SEMI DETACHED CUMBRIA
MOORCLOSE ROAD
SALTERBACK
WORKINGTON
Edge of Town
No Sub Category
Total Number of dwellings: 82
Survey date: FRIDAY 24/04/09 Survey Type: MANUAL

3 CF-03-A-02 MIXED HOUSES CARDIFF
DROPE ROAD

CARDIFF
Edge of Town
Residential Zone
Total Number of dwellings: 196
Survey date: FRIDAY 05/10/07 Survey Type: MANUAL

4 CH-03-A-02 HOUSES/FLATS CHESHIRE
SYDNEY ROAD

CREWE
Edge of Town
Residential Zone
Total Number of dwellings: 174
Survey date: TUESDAY 14/10/08 Survey Type: MANUAL

5 CH-03-A-06 SEMI-DET./BUNGALOWS CHESHIRE
CREWE ROAD

CREWE
Suburban Area (PPS6 Out of Centre)
No Sub Category
Total Number of dwellings: 129
Survey date: TUESDAY 14/10/08 Survey Type: MANUAL

6 CW-03-A-02 SEMI D./DETATCHED CORNWALL
BOSVEAN GARDENS

TRURO
Suburban Area (PPS6 Out of Centre)
Residential Zone
Total Number of dwellings: 73
Survey date: TUESDAY 18/09/07 Survey Type: MANUAL

7 DC-03-A-01 DETACHED DORSET
ISAACS CLOSE

POOLE
Suburban Area (PPS6 Out of Centre)
Residential Zone
Total Number of dwellings: 51
Survey date: WEDNESDAY 16/07/08 Survey Type: MANUAL

LIST OF SITES relevant to selection parameters (Cont.)

8 **EX-03-A-01** **SEMI-DET.** **ESSEX**
MILTON ROAD
CORRINGHAM
STANFORD-LE-HOPE
Edge of Town
Residential Zone
Total Number of dwellings: 237
Survey date: TUESDAY *13/05/08* *Survey Type: MANUAL*

9 **FA-03-A-02** **MIXED HOUSES** **FALKIRK**
ROSEBANK AVENUE & SPRINGFIELD DRIVE

FALKIRK
Suburban Area (PPS6 Out of Centre)
Residential Zone
Total Number of dwellings: 161
Survey date: WEDNESDAY *29/05/13* *Survey Type: MANUAL*

10 **FI-03-A-03** **MIXED HOUSES** **FIFE**
WOODMILL ROAD

DUNFERMLINE
Edge of Town
Residential Zone
Total Number of dwellings: 155
Survey date: MONDAY *30/04/07* *Survey Type: MANUAL*

11 **HI-03-A-14** **SEMI-DETACHED** **HIGHLAND**
CALEDONIAN ROAD
DALNEIGH
INVERNESS
Suburban Area (PPS6 Out of Centre)
Residential Zone
Total Number of dwellings: 73
Survey date: FRIDAY *13/05/11* *Survey Type: MANUAL*

12 **LN-03-A-01** **MIXED HOUSES** **LINCOLNSHIRE**
BRANT ROAD
BRACEBRIDGE
LINCOLN
Edge of Town
Residential Zone
Total Number of dwellings: 150
Survey date: TUESDAY *15/05/07* *Survey Type: MANUAL*

13 **LN-03-A-02** **MIXED HOUSES** **LINCOLNSHIRE**
HYKEHAM ROAD

LINCOLN
Suburban Area (PPS6 Out of Centre)
Residential Zone
Total Number of dwellings: 186
Survey date: MONDAY *14/05/07* *Survey Type: MANUAL*

14 **NE-03-A-02** **SEMI DETACHED & DETACHED** **NORTH EAST LINCOLNSHIRE**
HANOVER WALK

SCUNTHORPE
Edge of Town
No Sub Category
Total Number of dwellings: 432
Survey date: MONDAY *12/05/14* *Survey Type: MANUAL*

LIST OF SITES relevant to selection parameters (Cont.)

15 NF-03-A-02 HOUSES & FLATS NORFOLK
DEREHAM ROAD

NORWICH
Suburban Area (PPS6 Out of Centre)
Residential Zone
Total Number of dwellings: 98
Survey date: MONDAY 22/10/12 Survey Type: MANUAL

16 NY-03-A-06 BUNGALOWS & SEMI DET. NORTH YORKSHIRE
HORSEFAIR

BOROUGHBRIDGE
Suburban Area (PPS6 Out of Centre)
Residential Zone
Total Number of dwellings: 115
Survey date: FRIDAY 14/10/11 Survey Type: MANUAL

17 NY-03-A-09 MIXED HOUSING NORTH YORKSHIRE
GRAMMAR SCHOOL LANE

NORTHALLERTON
Suburban Area (PPS6 Out of Centre)
Residential Zone
Total Number of dwellings: 52
Survey date: MONDAY 16/09/13 Survey Type: MANUAL

18 NY-03-A-10 HOUSES AND FLATS NORTH YORKSHIRE
BOROUGHBRIDGE ROAD

RIPON
Edge of Town
No Sub Category
Total Number of dwellings: 71
Survey date: TUESDAY 17/09/13 Survey Type: MANUAL

19 SC-03-A-04 DETACHED & TERRACED SURREY
HIGH ROAD

BYFLEET
Edge of Town
Residential Zone
Total Number of dwellings: 71
Survey date: THURSDAY 23/01/14 Survey Type: MANUAL

20 SF-03-A-01 SEMI DETACHED SUFFOLK
A1156 FELIXSTOWE ROAD
RACECOURSE
IPSWICH
Suburban Area (PPS6 Out of Centre)
Residential Zone
Total Number of dwellings: 77
Survey date: WEDNESDAY 23/05/07 Survey Type: MANUAL

21 SF-03-A-02 SEMI DET./TERRACED SUFFOLK
STOKE PARK DRIVE
MAIDENHALL
IPSWICH
Edge of Town
Residential Zone
Total Number of dwellings: 230
Survey date: THURSDAY 24/05/07 Survey Type: MANUAL

LIST OF SITES relevant to selection parameters (Cont.)

22 SH-03-A-04 TERRACED SHROPSHIRE
ST MICHAEL'S STREET

SHREWSBURY
Suburban Area (PPS6 Out of Centre)
No Sub Category
Total Number of dwellings: 108
Survey date: THURSDAY 11/06/09 Survey Type: MANUAL

23 SH-03-A-05 SEMI-DETACHED/TERRACED SHROPSHIRE
SANDCROFT
SUTTON HILL
TELFORD
Edge of Town
Residential Zone
Total Number of dwellings: 54
Survey date: THURSDAY 24/10/13 Survey Type: MANUAL

24 SR-03-A-01 DETACHED STIRLING
BENVIEW

STIRLING
Suburban Area (PPS6 Out of Centre)
Residential Zone
Total Number of dwellings: 115
Survey date: MONDAY 23/04/07 Survey Type: MANUAL

25 SY-03-A-01 SEMI DETACHED HOUSES SOUTH YORKSHIRE
A19 BENTLEY ROAD
BENTLEY RISE
DONCASTER
Suburban Area (PPS6 Out of Centre)
Residential Zone
Total Number of dwellings: 54
Survey date: WEDNESDAY 18/09/13 Survey Type: MANUAL

26 WM-03-A-03 MIXED HOUSING WEST MIDLANDS
BASELEY WAY
ROWLEYS GREEN
COVENTRY
Edge of Town
Residential Zone
Total Number of dwellings: 84
Survey date: MONDAY 24/09/07 Survey Type: MANUAL

27 WS-03-A-04 MIXED HOUSES WEST SUSSEX
HILLS FARM LANE
BROADBRIDGE HEATH
HORSHAM
Edge of Town
Residential Zone
Total Number of dwellings: 151
Survey date: THURSDAY 11/12/14 Survey Type: MANUAL

This section provides a list of all survey sites and days in the selected set. For each individual survey site, it displays a unique site reference code and site address, the selected trip rate calculation parameter and its value, the day of the week and date of each survey, and whether the survey was a manual classified count or an ATC count.

RANK ORDER for Land Use 03 - RESIDENTIAL/A - HOUSES PRIVATELY OWNED

VEHICLES

Ranking Type: **TOTALS** Time Range: 17:00-18:00

15th Percentile = No. **23** WS-03-A-04 Tot: 0.371

85th Percentile = No. **5** SH-03-A-04 Tot: 0.759

Median Values		Mean Values	
Arrivals:	0.354	Arrivals:	0.352
Departures:	0.207	Departures:	0.209
Totals:	0.561	Totals:	0.561

Rank	Site-Ref	Description	Town/City	Area	DWELLS	Day	Date	Trip Rate (Sorted by Totals)			Park Spaces
								Arrivals	Departures	Totals	Per Dwelling
1	SR-03-A-01	DETACHED	STIRLING	STIRLING	115	Mon	23/04/07	0.583	0.304	0.887	2.86
2	LN-03-A-02	MIXED HOUSES	LINCOLN	LINCOLNSHIRE	186	Mon	14/05/07	0.495	0.355	0.850	4.13
3	DC-03-A-01	DETACHED	POOLE	DORSET	51	Wed	16/07/08	0.510	0.333	0.843	3.00
4	WM-03-A-03	MIXED HOUSING	COVENTRY	WEST MIDLANDS	84	Mon	24/09/07	0.405	0.369	0.774	2.60
5	**SH-03-A-04**	**TERRACED**	**SHREWSBURY**	**SHROPSHIRE**	**108**	**Thu**	**11/06/09**	**0.463**	**0.296**	**0.759**	**1.86**
6	SF-03-A-02	SEMI DET./TERR	IPSWICH	SUFFOLK	230	Thu	24/05/07	0.478	0.248	0.726	2.48
7	EX-03-A-01	SEMI-DET.	STANFORD-LE-HOPE	ESSEX	237	Tue	13/05/08	0.439	0.274	0.713	2.53
8	HI-03-A-14	SEMI-DETACHED	INVERNESS	HIGHLAND	73	Fri	13/05/11	0.356	0.329	0.685	2.05
9	FI-03-A-03	MIXED HOUSES	DUNFERMLINE	FIFE	155	Mon	30/04/07	0.419	0.245	0.664	2.84
10	CW-03-A-02	SEMI D./DETATC	TRURO	CORNWALL	73	Tue	18/09/07	0.425	0.219	0.644	3.73
11	LN-03-A-01	MIXED HOUSES	LINCOLN	LINCOLNSHIRE	150	Tue	15/05/07	0.413	0.213	0.626	4.91
12	CF-03-A-02	MIXED HOUSES	CARDIFF	CARDIFF	196	Fri	05/10/07	0.398	0.214	0.612	1.98
13	NY-03-A-10	HOUSES AND FLA	RIPON	NORTH YORKSHIRE	71	Tue	17/09/13	0.479	0.099	0.578	0.83
14	CB-03-A-04	SEMI DETACHED	WORKINGTON	CUMBRIA	82	Fri	24/04/09	0.354	0.207	0.561	1.74
15	CH-03-A-02	HOUSES/FLATS	CREWE	CHESHIRE	174	Tue	14/10/08	0.322	0.236	0.558	2.81
16	FA-03-A-02	MIXED HOUSES	FALKIRK	FALKIRK	161	Wed	29/05/13	0.317	0.224	0.541	1.66
17	NY-03-A-06	BUNGALOWS & SE	BOROUGHBRIDGE	NORTH YORKSHIRE	115	Fri	14/10/11	0.296	0.174	0.470	3.50
18	SC-03-A-04	DETACHED & TER	BYFLEET	SURREY	71	Thu	23/01/14	0.366	0.099	0.465	2.49
19	NY-03-A-09	MIXED HOUSING	NORTHALLERTON	NORTH YORKSHIRE	52	Mon	16/09/13	0.269	0.192	0.461	2.60
20	NE-03-A-02	SEMI DETACHED	SCUNTHORPE	NORTH EAST LINCOLNS	432	Mon	12/05/14	0.257	0.162	0.419	1.00
21	SF-03-A-01	SEMI DETACHED	IPSWICH	SUFFOLK	77	Wed	23/05/07	0.247	0.169	0.416	2.22
22	NF-03-A-02	HOUSES & FLATS	NORWICH	NORFOLK	98	Mon	22/10/12	0.235	0.143	0.378	2.24
23	**WS-03-A-04**	**MIXED HOUSES**	**HORSHAM**	**WEST SUSSEX**	**151**	**Thu**	**11/12/14**	**0.252**	**0.119**	**0.371**	**2.28**
24	SH-03-A-05	SEMI-DETACHED/	TELFORD	SHROPSHIRE	54	Thu	24/10/13	0.241	0.130	0.371	1.17
25	SY-03-A-01	SEMI DETACHED	DONCASTER	SOUTH YORKSHIRE	54	Wed	18/09/13	0.278	0.056	0.334	1.13
26	CH-03-A-06	SEMI-DET./BUNG	CREWE	CHESHIRE	129	Tue	14/10/08	0.132	0.140	0.272	2.59
27	AD-03-A-01	SEMI-DETACHED	ABERDEEN	ABERDEEN CITY	59	Fri	18/05/12	0.085	0.085	0.170	2.68

This section displays actual (not average) trip rates for each of the survey days in the selected set, and ranks them in order of relative trip rate intensity, for a given time period (or peak period irrespective of time) selected by the user. The count type and direction are both displayed just above the table, along with the rows within the table representing the 85th and 15th percentile trip rate figures (highlighted in bold within the table itself).

The table itself displays details of each individual survey, alongside arrivals, departures and totals trip rates, sorted by whichever of the three directional options has been chosen by the user. As with the preceeding trip rate calculation results table, the trip rates shown are per the calculation factor (e.g. per 100m2 GFA, per employee, per hectare, etc). Note that if the peak period option has been selected (as opposed to a specific chosen time period), the peak period for each individual survey day in the table is also displayed.

APPENDIX G

DEVELOPMENT DISTRIBUTION – CENSUS TRAVEL TO WORK DATA

Census 2011 - Travel to Work Data
Development Distribution

place of work : 2011 super output area - middle layer	usual residence		
	Wrexham 003		
	W02000080		
Adur 007	E02006540	1	0%
Amber Valley 015	E02004043	1	0%
Birmingham 004	E02001830	1	0%
Birmingham 096	E02001922	1	0%
Blackpool 002	E02002634	1	0%
Bristol 041	E02003052	1	0%
Calderdale 008	E02002251	10	0%
Calderdale 025	E02002268	1	0%
Cannock Chase 012	E02006129	1	0%
Cardiff 008	W02000374	1	0%
Cardiff 032	W02000398	1	0%
Carmarthenshire 020	W02000161	1	0%
Central Bedfordshire 001	E02003599	1	0%
Cheshire East 011	E02003862	3	0%
Cheshire East 022	E02003811	1	0%
Cheshire East 023	E02003812	1	0%
Cheshire East 030	E02003819	2	0%
Cheshire East 037	E02003828	2	0%
Cheshire East 038	E02003829	1	0%
Cheshire East 039	E02003830	3	0%
Cheshire East 045	E02003834	1	0%
Cheshire East 047	E02003836	1	0%
Cheshire East 049	E02003837	2	0%
Cheshire East 050	E02003839	1	0%
Cheshire East 051	E02003840	2	0%
Cheshire West and Chester 001	E02003841	2	0%
Cheshire West and Chester 002	E02003874	1	0%
Cheshire West and Chester 005	E02003843	2	0%
Cheshire West and Chester 007	E02003845	8	0%
Cheshire West and Chester 010	E02003848	1	0%
Cheshire West and Chester 011	E02003849	13	0%
Cheshire West and Chester 013	E02003850	1	0%
Cheshire West and Chester 014	E02003851	3	0%
Cheshire West and Chester 016	E02003852	1	0%
Cheshire West and Chester 017	E02003878	2	0%
Cheshire West and Chester 022	E02003794	8	0%
Cheshire West and Chester 023	E02003883	1	0%
Cheshire West and Chester 025	E02003795	4	0%
Cheshire West and Chester 027	E02003796	1	0%
Cheshire West and Chester 028	E02003797	14	0%
Cheshire West and Chester 029	E02003798	4	0%
Cheshire West and Chester 030	E02003800	3	0%
Cheshire West and Chester 032	E02003801	2	0%

Census 2011 - Travel to Work Data
Development Distribution

place of work : 2011 super output area - middle layer	usual residence		
	Wrexham 003		
	W02000080		
Cheshire West and Chester 033	E02003802	24	1%
Cheshire West and Chester 034	E02003803	103	3%
Cheshire West and Chester 037	E02003887	1	0%
Cheshire West and Chester 038	E02003888	1	0%
Cheshire West and Chester 039	E02003805	3	0%
Cheshire West and Chester 041	E02003806	2	0%
Cheshire West and Chester 043	E02003807	5	0%
Cheshire West and Chester 045	E02003891	1	0%
Cheshire West and Chester 046	E02003809	56	2%
Cheshire West and Chester 047	E02003810	24	1%
Chichester 005	E02006565	1	0%
Chorley 014	E02005202	1	0%
Conwy 002	W02000028	1	0%
Conwy 004	W02000030	1	0%
Conwy 006	W02000032	1	0%
Conwy 007	W02000033	7	0%
Conwy 008	W02000034	1	0%
Conwy 010	W02000036	1	0%
Conwy 011	W02000037	4	0%
Conwy 012	W02000038	3	0%
Denbighshire 001	W02000042	1	0%
Denbighshire 002	W02000043	1	0%
Denbighshire 004	W02000045	2	0%
Denbighshire 008	W02000049	2	0%
Denbighshire 009	W02000050	15	0%
Denbighshire 010	W02000051	2	0%
Denbighshire 011	W02000052	2	0%
Denbighshire 012	W02000053	1	0%
Denbighshire 013	W02000054	4	0%
Denbighshire 014	W02000055	4	0%
Denbighshire 015	W02000056	1	0%
Denbighshire 016	W02000057	19	1%
Denbighshire 017	W02000419	1	0%
Doncaster 020	E02001558	1	0%
Dudley 013	E02002012	1	0%
Eden 006	E02004013	1	0%
Flintshire 001	W02000058	2	0%
Flintshire 002	W02000059	9	0%
Flintshire 003	W02000060	3	0%
Flintshire 004	W02000061	29	1%
Flintshire 006	W02000063	3	0%
Flintshire 007	W02000064	15	0%
Flintshire 008	W02000065	5	0%
Flintshire 009	W02000066	55	2%

Census 2011 - Travel to Work Data
Development Distribution

place of work : 2011 super output area - middle layer	usual residence		
	Wrexham 003		
	W02000080		
Flintshire 010	W02000067	4	0%
Flintshire 011	W02000068	30	1%
Flintshire 012	W02000069	14	0%
Flintshire 013	W02000070	11	0%
Flintshire 015	W02000072	90	3%
Flintshire 016	W02000073	50	1%
Flintshire 017	W02000074	13	0%
Flintshire 018	W02000075	4	0%
Flintshire 019	W02000076	6	0%
Flintshire 020	W02000077	28	1%
Gwynedd 001	W02000010	1	0%
Gwynedd 004	W02000013	1	0%
Halton 007	E02002580	1	0%
Halton 009	E02002582	7	0%
Halton 013	E02002586	2	0%
Halton 015	E02002588	1	0%
Harlow 004	E02004547	1	0%
Harrogate 018	E02005778	16	0%
Harrow 023	E02000455	1	0%
Havant 016	E02004777	1	0%
Hounslow 029	E02006792	1	0%
Isle of Anglesey 003	W02000003	2	0%
Kirklees 024	E02002294	2	0%
Kirklees 031	E02002301	1	0%
Knowsley 005	E02001331	1	0%
Liverpool 022	E02001368	3	0%
Liverpool 028	E02001374	2	0%
Liverpool 031	E02001377	2	0%
Liverpool 060	E02006932	4	0%
Liverpool 061	E02006933	1	0%
Liverpool 062	E02006934	3	0%
Manchester 017	E02001061	1	0%
Manchester 022	E02001066	1	0%
Manchester 033	E02001077	1	0%
Manchester 051	E02001095	2	0%
Manchester 053	E02001097	9	0%
Manchester 055	E02006912	1	0%
Manchester 060	E02006917	1	0%
Mid Sussex 012	E02006615	1	0%
Monmouthshire 001	W02000336	1	0%
New Forest 004	E02004782	1	0%
Newport 015	W02000361	1	0%
North Kesteven 008	E02005460	1	0%
Poole 015	E02003208	1	0%

Census 2011 - Travel to Work Data
Development Distribution

place of work : 2011 super output area - middle layer	usual residence		
	Wrexham 003		
	W02000080		
Powys 002	W02000098	3	0%
Powys 003	W02000099	4	0%
Powys 004	W02000100	1	0%
Powys 005	W02000101	1	0%
Powys 018	W02000114	1	0%
Reading 007	E02003395	1	0%
Rochdale 001	E02001132	1	0%
Rochdale 010	E02001141	1	0%
Rochdale 012	E02001143	2	0%
Rochdale 013	E02001144	1	0%
Salford 021	E02001177	1	0%
Salford 028	E02001184	1	0%
Scarborough 014	E02005808	1	0%
Sefton 026	E02001454	1	0%
Sheffield 004	E02001614	1	0%
Shropshire 001	E02006015	3	0%
Shropshire 002	E02006016	2	0%
Shropshire 003	E02006023	6	0%
Shropshire 004	E02006017	6	0%
Shropshire 005	E02006018	1	0%
Shropshire 006	E02006024	8	0%
Shropshire 007	E02006025	9	0%
Shropshire 009	E02006020	1	0%
Shropshire 010	E02006021	2	0%
Shropshire 011	E02006026	1	0%
Shropshire 012	E02006027	1	0%
Shropshire 014	E02006028	2	0%
Shropshire 015	E02006029	1	0%
Shropshire 016	E02006030	1	0%
Shropshire 020	E02006034	1	0%
Shropshire 021	E02006035	2	0%
Shropshire 022	E02006036	1	0%
South Oxfordshire 011	E02005968	2	0%
South Ribble 008	E02005294	1	0%
Spelthorne 008	E02006410	1	0%
St Albans 001	E02004924	1	0%
St. Helens 005	E02001410	2	0%
St. Helens 019	E02001424	2	0%
Stockport 014	E02001200	1	0%
Stockport 028	E02001214	1	0%
Stoke-on-Trent 011	E02002961	1	0%
Stoke-on-Trent 015	E02002965	2	0%
Stoke-on-Trent 020	E02002970	1	0%
Stoke-on-Trent 023	E02002973	1	0%

Census 2011 - Travel to Work Data
Development Distribution

place of work : 2011 super output area - middle layer	usual residence		
	Wrexham 003		
	W02000080		
Swindon 010	E02003221	1	0%
Tameside 007	E02001235	1	0%
Taunton Deane 008	E02006106	2	0%
Telford and Wrekin 016	E02002943	1	0%
Torfaen 010	W02000332	1	0%
Trafford 002	E02001260	4	0%
Trafford 006	E02001264	1	0%
Trafford 025	E02001283	1	0%
Vale of White Horse 003	E02005980	1	0%
Walsall 025	E02002134	1	0%
Warrington 004	E02002593	2	0%
Warrington 005	E02002594	1	0%
Warrington 014	E02002603	2	0%
Warrington 017	E02002606	1	0%
Warrington 018	E02002607	5	0%
Warwick 012	E02006530	1	0%
Wealden 009	E02004411	1	0%
Wellingborough 005	E02005696	2	0%
West Berkshire 019	E02003385	1	0%
West Lancashire 004	E02005307	1	0%
West Oxfordshire 014	E02006006	2	0%
Westminster 020	E02000979	1	0%
Wigan 011	E02001297	1	0%
Wigan 038	E02001324	1	0%
Wigan 039	E02001325	1	0%
Wigan 040	E02001326	1	0%
Wiltshire 008	E02006651	1	0%
Wiltshire 041	E02006643	3	0%
Wirral 003	E02001469	1	0%
Wirral 006	E02001472	1	0%
Wirral 007	E02001473	1	0%
Wirral 009	E02001475	1	0%
Wirral 012	E02001478	2	0%
Wirral 016	E02001482	3	0%
Wirral 017	E02001483	1	0%
Wirral 020	E02001486	2	0%
Wirral 024	E02001490	2	0%
Wirral 026	E02001492	1	0%
Wirral 039	E02001505	2	0%
Wolverhampton 012	E02002160	1	0%
Wrexham 003	W02000080	193	6%
Wrexham 004	W02000081	82	2%
Wrexham 005	W02000082	23	1%
Wrexham 006	W02000083	20	1%

Census 2011 - Travel to Work Data
Development Distribution

place of work : 2011 super output area - middle layer	usual residence		
	Wrexham 003		
	W02000080		
Wrexham 007	W02000084	42	1%
Wrexham 008	W02000085	328	10%
Wrexham 009	W02000086	75	2%
Wrexham 010	W02000087	17	1%
Wrexham 011	W02000088	394	12%
Wrexham 012	W02000089	154	5%
Wrexham 013	W02000090	20	1%
Wrexham 014	W02000091	40	1%
Wrexham 015	W02000092	50	1%
Wrexham 016	W02000093	48	1%
Wrexham 017	W02000094	14	0%
Wrexham 018	W02000095	28	1%
Wrexham 019	W02000096	24	1%
Wrexham 020	W02000420	805	24%
		3,360	

APPENDIX H

PLAS ACTON ROAD/ B5425 LLAY ROAD – PICADY MODEL OUTPUTS

Junctions 8

PICADY 8 - Priority Intersection Module

Version: 8.0.2.316 [14 Feb 2013]
© Copyright TRL Limited, 2021

For sales and distribution information, program advice and maintenance, contact TRL:
Tel: +44 (0)1344 770758 E-mail: software@trl.co.uk Web: http://www.trlsoftware.co.uk

The users of this computer program for the solution of an engineering problem are in no way relieved of their responsibility for the correctness of the solution

Filename: Plas Acton_Llay Rd.arc8
Path: D:\Cameron Rose Associates\Projects\528_Proposed Residential Development New Llay Road, Rhosrobin\ANALYSIS\PICADY\Plas Acton_Llay Road\96 Units
Report generation date: 23/09/2021 16:18:44

File summary

File Description

Title	Plas Acton Road/ B5425 Llay Road
Location	Rhosrobin
Site Number	
Date	08/08/2019
Version	
Status	
Identifier	
Client	
Jobnumber	528
Enumerator	Cameron Rose Associates
Description	

Analysis Options

Vehicle Length (m)	Do Queue Variations	Calculate Residual Capacity	Residual Capacity Criteria Type	RFC Threshold	Average Delay Threshold (s)	Queue Threshold (PCU)
5.75			N/A	0.85	36.00	20.00

Units

Distance Units	Speed Units	Traffic Units Input	Traffic Units Results	Flow Units	Average Delay Units	Total Delay Units	Rate Of Delay Units
m	kph	PCU	PCU	perHour	s	-Min	perMin

Existing Layout - 2021 Base, AM

Data Errors and Warnings

No errors or warnings

Analysis Set Details

Name	Description	Locked	Network Flow Scaling Factor (%)	Reason For Scaling Factors
Existing Layout			100.000	

Demand Set Details

Name	Scenario Name	Time Period Name	Description	Traffic Profile Type	Model Start Time (HH:mm)	Model Finish Time (HH:mm)	Model Time Period Length (min)	Time Segment Length (min)	Single Time Segment Only	Locked
2021 Base, AM	2021 Base	AM		ONE HOUR	07:45	09:15	90	15		

Junction Network

Junctions

Name	Junction Type	Major Road Direction	Arm Order	Junction Delay (s)	Junction LOS
(untitled)	T-Junction	Two-way	A,B,C	14.80	B

Junction Network Options

Driving Side	Lighting
Left	Normal/unknown

Arms

Arms

Arm	Name	Description	Arm Type
A	B5425 Llay New Road (n)		Major
B	Plas Acton Road		Minor
C	B5425 Llay New Road (s)		Major

Major Arm Geometry

Arm	Width of carriageway (m)	Has kerbed central reserve	Width of kerbed central reserve (m)	Has right turn bay	Width For Right Turn (m)	Visibility For Right Turn (m)	Blocks?	Blocking Queue (PCU)
C	6.80		0.00		2.20	70.00	✓	1.00

Geometries for Arm C are measured opposite Arm B. Geometries for Arm A (if relevant) are measured opposite Arm D.

Minor Arm Geometry

Arm	Minor Arm Type	Lane Width (m)	Lane Width (Left) (m)	Lane Width (Right) (m)	Width at give-way (m)	Width at 5m (m)	Width at 10m (m)	Width at 15m (m)	Width at 20m (m)	Estimate Flare Length	Flare Length (PCU)	Visibility To Left (m)	Visibility To Right (m)
B	One lane plus flare				10.00	6.40	5.50	4.30	3.20		3.00	70	70

Pedestrian Crossings

Arm	Crossing Type
A	None
B	None
C	None

Slope / Intercept / Capacity

Priority Intersection Slopes and Intercepts

Junction	Stream	Intercept (PCU/hr)	Slope for A-B	Slope for A-C	Slope for C-A	Slope for C-B
1	B-A	566.269	0.100	0.252	0.158	0.359
1	B-C	716.186	0.106	0.268	-	-
1	C-B	614.501	0.230	0.230	-	-

The slopes and intercepts shown above do NOT include any corrections or adjustments.
Streams may be combined, in which case capacity will be adjusted.
Values are shown for the first time segment only; they may differ for subsequent time segments.

Traffic Flows

Demand Set Data Options

Default Vehicle Mix	Vehicle Mix Varies Over Time	Vehicle Mix Varies Over Turn	Vehicle Mix Varies Over Entry	Vehicle Mix Source	PCU Factor for a HV (PCU)	Default Turning Proportions	Estimate from entry/exit counts	Turning Proportions Vary Over Time	Turning Proportions Vary Over Turn	Turning Proportions Vary Over Entry
		✓	✓	HV Percentages	2.00				✓	✓

Entry Flows

General Flows Data

Arm	Profile Type	Use Turning Counts	Average Demand Flow (PCU/hr)	Flow Scaling Factor (%)
A	ONE HOUR	✓	573.70	100.000
B	ONE HOUR	✓	340.70	100.000
C	ONE HOUR	✓	336.00	100.000

Turning Proportions

Turning Counts or Proportions (PCU/hr) - Junction 1 (for whole period)

		To		
		A	B	C
From	A	0.000	193.300	380.400
	B	164.300	0.000	176.400
	C	191.900	144.100	0.000

Turning Proportions (PCU) - Junction 1 (for whole period)

		To		
		A	B	C
From	A	0.00	0.34	0.66
	B	0.48	0.00	0.52
	C	0.57	0.43	0.00

Vehicle Mix

Average PCU Per Vehicle - Junction 1 (for whole period)

		To		
		A	B	C
From	A	1.000	1.000	1.000
	B	1.000	1.000	1.000
	C	1.000	1.000	1.000

Heavy Vehicle Percentages - Junction 1 (for whole period)

		To		
		A	B	C
From	A	0.000	0.000	0.000
	B	0.000	0.000	0.000
	C	0.000	0.000	0.000

Results

Results Summary for whole modelled period

Stream	Max RFC	Max Delay (s)	Max Queue (PCU)	Max LOS
B-C	0.39	12.09	0.64	B
B-A	0.52	21.71	1.07	C
C-AB	0.35	10.68	0.58	B
C-A	-	-	-	-
A-B	-	-	-	-
A-C	-	-	-	-

Main Results for each time segment

Main results: (07:45-08:00)

Stream	Total Demand (PCU/hr)	Entry Flow (PCU/hr)	Pedestrian Demand (Ped/hr)	Capacity (PCU/hr)	RFC	End Queue (PCU)	Delay (s)	LOS
B-C	132.80	131.62	0.00	577.13	0.230	0.30	8.060	A
B-A	123.69	122.04	0.00	417.66	0.296	0.41	12.114	B
C-AB	114.89	113.78	0.00	536.60	0.214	0.28	8.494	A
C-A	138.07	138.07	0.00	-	-	-	-	-
A-B	145.53	145.53	0.00	-	-	-	-	-
A-C	286.39	286.39	0.00	-	-	-	-	-

Main results: (08:00-08:15)

Stream	Total Demand (PCU/hr)	Entry Flow (PCU/hr)	Pedestrian Demand (Ped/hr)	Capacity (PCU/hr)	RFC	End Queue (PCU)	Delay (s)	LOS
B-C	158.58	158.14	0.00	545.18	0.291	0.40	9.291	A
B-A	147.70	146.96	0.00	388.18	0.381	0.60	14.875	B
C-AB	141.31	140.91	0.00	527.83	0.268	0.38	9.299	A
C-A	160.75	160.75	0.00	-	-	-	-	-
A-B	173.77	173.77	0.00	-	-	-	-	-
A-C	341.97	341.97	0.00	-	-	-	-	-

Main results: (08:15-08:30)

Stream	Total Demand (PCU/hr)	Entry Flow (PCU/hr)	Pedestrian Demand (Ped/hr)	Capacity (PCU/hr)	RFC	End Queue (PCU)	Delay (s)	LOS
B-C	194.22	193.30	0.00	493.41	0.394	0.64	11.959	B
B-A	180.90	179.12	0.00	346.51	0.522	1.04	21.276	C
C-AB	182.80	182.02	0.00	520.13	0.351	0.57	10.631	B
C-A	187.14	187.14	0.00	-	-	-	-	-
A-B	212.83	212.83	0.00	-	-	-	-	-
A-C	418.83	418.83	0.00	-	-	-	-	-

Main results: (08:30-08:45)

Stream	Total Demand (PCU/hr)	Entry Flow (PCU/hr)	Pedestrian Demand (Ped/hr)	Capacity (PCU/hr)	RFC	End Queue (PCU)	Delay (s)	LOS
B-C	194.22	194.18	0.00	491.86	0.395	0.64	12.089	B
B-A	180.90	180.80	0.00	346.34	0.522	1.07	21.712	C
C-AB	182.80	182.77	0.00	520.13	0.351	0.58	10.679	B
C-A	187.14	187.14	0.00	-	-	-	-	-

A-B	212.83	212.83	0.00	-	-	-	-	-
A-C	418.83	418.83	0.00	-	-	-	-	-

Main results: (08:45-09:00)

Stream	Total Demand (PCU/hr)	Entry Flow (PCU/hr)	Pedestrian Demand (Ped/hr)	Capacity (PCU/hr)	RFC	End Queue (PCU)	Delay (s)	LOS
B-C	158.58	159.49	0.00	543.48	0.292	0.42	9.396	A
B-A	147.70	149.45	0.00	388.07	0.381	0.63	15.192	C
C-AB	141.31	142.07	0.00	527.83	0.268	0.39	9.355	A
C-A	160.75	160.75	0.00	-	-	-	-	-
A-B	173.77	173.77	0.00	-	-	-	-	-
A-C	341.97	341.97	0.00	-	-	-	-	-

Main results: (09:00-09:15)

Stream	Total Demand (PCU/hr)	Entry Flow (PCU/hr)	Pedestrian Demand (Ped/hr)	Capacity (PCU/hr)	RFC	End Queue (PCU)	Delay (s)	LOS
B-C	132.80	133.26	0.00	575.68	0.231	0.30	8.145	A
B-A	123.69	124.50	0.00	417.41	0.296	0.43	12.326	B
C-AB	114.89	115.31	0.00	536.60	0.214	0.29	8.557	A
C-A	138.07	138.07	0.00	-	-	-	-	-
A-B	145.53	145.53	0.00	-	-	-	-	-
A-C	286.39	286.39	0.00	-	-	-	-	-

Existing Layout - 2021 Base, PM

Data Errors and Warnings

No errors or warnings

Analysis Set Details

Name	Description	Locked	Network Flow Scaling Factor (%)	Reason For Scaling Factors
Existing Layout			100.000	

Demand Set Details

Name	Scenario Name	Time Period Name	Description	Traffic Profile Type	Model Start Time (HH:mm)	Model Finish Time (HH:mm)	Model Time Period Length (min)	Time Segment Length (min)	Single Time Segment Only	Locked
2021 Base, PM	2021 Base	PM		ONE HOUR	16:15	17:45	90	15		

Junction Network

Junctions

Name	Junction Type	Major Road Direction	Arm Order	Junction Delay (s)	Junction LOS
(untitled)	T-Junction	Two-way	A,B,C	15.07	C

Junction Network Options

Driving Side	Lighting
Left	Normal/unknown

Arms

Arms

Arm	Name	Description	Arm Type
A	B5425 Llay New Road (n)		Major
B	Plas Acton Road		Minor
C	B5425 Llay New Road (s)		Major

Major Arm Geometry

Arm	Width of carriageway (m)	Has kerbed central reserve	Width of kerbed central reserve (m)	Has right turn bay	Width For Right Turn (m)	Visibility For Right Turn (m)	Blocks?	Blocking Queue (PCU)
C	6.80		0.00		2.20	70.00	✓	1.00

Geometries for Arm C are measured opposite Arm B. Geometries for Arm A (if relevant) are measured opposite Arm D.

Minor Arm Geometry

Arm	Minor Arm Type	Lane Width (m)	Lane Width (Left) (m)	Lane Width (Right) (m)	Width at give-way (m)	Width at 5m (m)	Width at 10m (m)	Width at 15m (m)	Width at 20m (m)	Estimate Flare Length	Flare Length (PCU)	Visibility To Left (m)	Visibility To Right (m)
B	One lane plus flare				10.00	6.40	5.50	4.30	3.20		3.00	70	70

Pedestrian Crossings

Arm	Crossing Type
A	None
B	None
C	None

Slope / Intercept / Capacity

Priority Intersection Slopes and Intercepts

Junction	Stream	Intercept (PCU/hr)	Slope for A-B	Slope for A-C	Slope for C-A	Slope for C-B
1	B-A	584.012	0.103	0.260	0.163	0.371
1	B-C	694.041	0.103	0.260	-	-
1	C-B	614.501	0.230	0.230	-	-

The slopes and intercepts shown above do NOT include any corrections or adjustments.
Streams may be combined, in which case capacity will be adjusted.
Values are shown for the first time segment only; they may differ for subsequent time segments.

Traffic Flows

Demand Set Data Options

Default Vehicle Mix	Vehicle Mix Varies Over Time	Vehicle Mix Varies Over Turn	Vehicle Mix Varies Over Entry	Vehicle Mix Source	PCU Factor for a HV (PCU)	Default Turning Proportions	Estimate from entry/exit counts	Turning Proportions Vary Over Time	Turning Proportions Vary Over Turn	Turning Proportions Vary Over Entry
		✓	✓	HV Percentages	2.00				✓	✓

Entry Flows

General Flows Data

Arm	Profile Type	Use Turning Counts	Average Demand Flow (PCU/hr)	Flow Scaling Factor (%)
A	ONE HOUR	✓	416.40	100.000
B	ONE HOUR	✓	330.20	100.000

C	ONE HOUR	✓	538.40	100.000

Turning Proportions

Turning Counts or Proportions (PCU/hr) - Junction 1 (for whole period)

		To		
		A	B	C
From	A	0.000	143.500	272.900
	B	186.800	0.000	143.400
	C	380.200	158.200	0.000

Turning Proportions (PCU) - Junction 1 (for whole period)

		To		
		A	B	C
From	A	0.00	0.34	0.66
	B	0.57	0.00	0.43
	C	0.71	0.29	0.00

Vehicle Mix

Average PCU Per Vehicle - Junction 1 (for whole period)

		To		
		A	B	C
From	A	1.000	1.000	1.000
	B	1.000	1.000	1.000
	C	1.000	1.000	1.000

Heavy Vehicle Percentages - Junction 1 (for whole period)

		To		
		A	B	C
From	A	0.000	0.000	0.000
	B	0.000	0.000	0.000
	C	0.000	0.000	0.000

Results

Results Summary for whole modelled period

Stream	Max RFC	Max Delay (s)	Max Queue (PCU)	Max LOS
B-C	0.32	10.89	0.47	B
B-A	0.58	23.98	1.33	C
C-AB	0.37	9.46	0.66	A
C-A	-	-	-	-
A-B	-	-	-	-
A-C	-	-	-	-

Main Results for each time segment

Main results: (16:15-16:30)

Stream	Total Demand (PCU/hr)	Entry Flow (PCU/hr)	Pedestrian Demand (Ped/hr)	Capacity (PCU/hr)	RFC	End Queue (PCU)	Delay (s)	LOS
B-C	107.96	107.05	0.00	576.70	0.187	0.23	7.651	A
B-A	140.63	138.72	0.00	428.62	0.328	0.48	12.341	B
C-AB	132.90	131.66	0.00	584.88	0.227	0.31	7.926	A
C-A	272.44	272.44	0.00	-	-	-	-	-
A-B	108.03	108.03	0.00	-	-	-	-	-
A-C	205.45	205.45	0.00	-	-	-	-	-

Main results: (16:30-16:45)

Stream	Total Demand (PCU/hr)	Entry Flow (PCU/hr)	Pedestrian Demand (Ped/hr)	Capacity (PCU/hr)	RFC	End Queue (PCU)	Delay (s)	LOS
B-C	128.91	128.61	0.00	546.52	0.236	0.31	8.608	A
B-A	167.93	167.00	0.00	397.99	0.422	0.71	15.520	C
C-AB	166.97	166.51	0.00	590.29	0.283	0.42	8.484	A
C-A	317.04	317.04	0.00	-	-	-	-	-
A-B	129.00	129.00	0.00	-	-	-	-	-
A-C	245.33	245.33	0.00	-	-	-	-	-

Main results: (16:45-17:00)

Stream	Total Demand (PCU/hr)	Entry Flow (PCU/hr)	Pedestrian Demand (Ped/hr)	Capacity (PCU/hr)	RFC	End Queue (PCU)	Delay (s)	LOS
B-C	157.89	157.24	0.00	490.93	0.322	0.47	10.763	B
B-A	205.67	203.32	0.00	355.36	0.579	1.30	23.314	C
C-AB	223.17	222.28	0.00	604.28	0.369	0.65	9.416	A
C-A	369.62	369.62	0.00	-	-	-	-	-
A-B	158.00	158.00	0.00	-	-	-	-	-
A-C	300.47	300.47	0.00	-	-	-	-	-

Main results: (17:00-17:15)

Stream	Total Demand (PCU/hr)	Entry Flow (PCU/hr)	Pedestrian Demand (Ped/hr)	Capacity (PCU/hr)	RFC	End Queue (PCU)	Delay (s)	LOS
B-C	157.89	157.86	0.00	488.40	0.323	0.47	10.889	B
B-A	205.67	205.53	0.00	355.27	0.579	1.33	23.976	C
C-AB	223.17	223.14	0.00	604.28	0.369	0.66	9.457	A
C-A	369.62	369.62	0.00	-	-	-	-	-
A-B	158.00	158.00	0.00	-	-	-	-	-
A-C	300.47	300.47	0.00	-	-	-	-	-

Main results: (17:15-17:30)

Stream	Total Demand (PCU/hr)	Entry Flow (PCU/hr)	Pedestrian Demand (Ped/hr)	Capacity (PCU/hr)	RFC	End Queue (PCU)	Delay (s)	LOS
B-C	128.91	129.55	0.00	544.08	0.237	0.31	8.699	A
B-A	167.93	170.26	0.00	397.99	0.422	0.75	15.963	C
C-AB	166.97	167.84	0.00	590.29	0.283	0.44	8.546	A
C-A	317.04	317.04	0.00	-	-	-	-	-
A-B	129.00	129.00	0.00	-	-	-	-	-
A-C	245.33	245.33	0.00	-	-	-	-	-

Main results: (17:30-17:45)

Stream	Total Demand (PCU/hr)	Entry Flow (PCU/hr)	Pedestrian Demand (Ped/hr)	Capacity (PCU/hr)	RFC	End Queue (PCU)	Delay (s)	LOS
B-C	107.96	108.28	0.00	574.91	0.188	0.23	7.720	A
B-A	140.63	141.64	0.00	428.38	0.328	0.50	12.598	B

C-AB	132.90	133.39	0.00	584.88	0.227	0.32	7.984	A
C-A	272.44	272.44	0.00	-	-	-	-	-
A-B	108.03	108.03	0.00	-	-	-	-	-
A-C	205.45	205.45	0.00	-	-	-	-	-

APPENDIX I

PLAS ACTON ROAD/ B5425 LLAY ROAD – LINSIG MODEL OUTPUTS

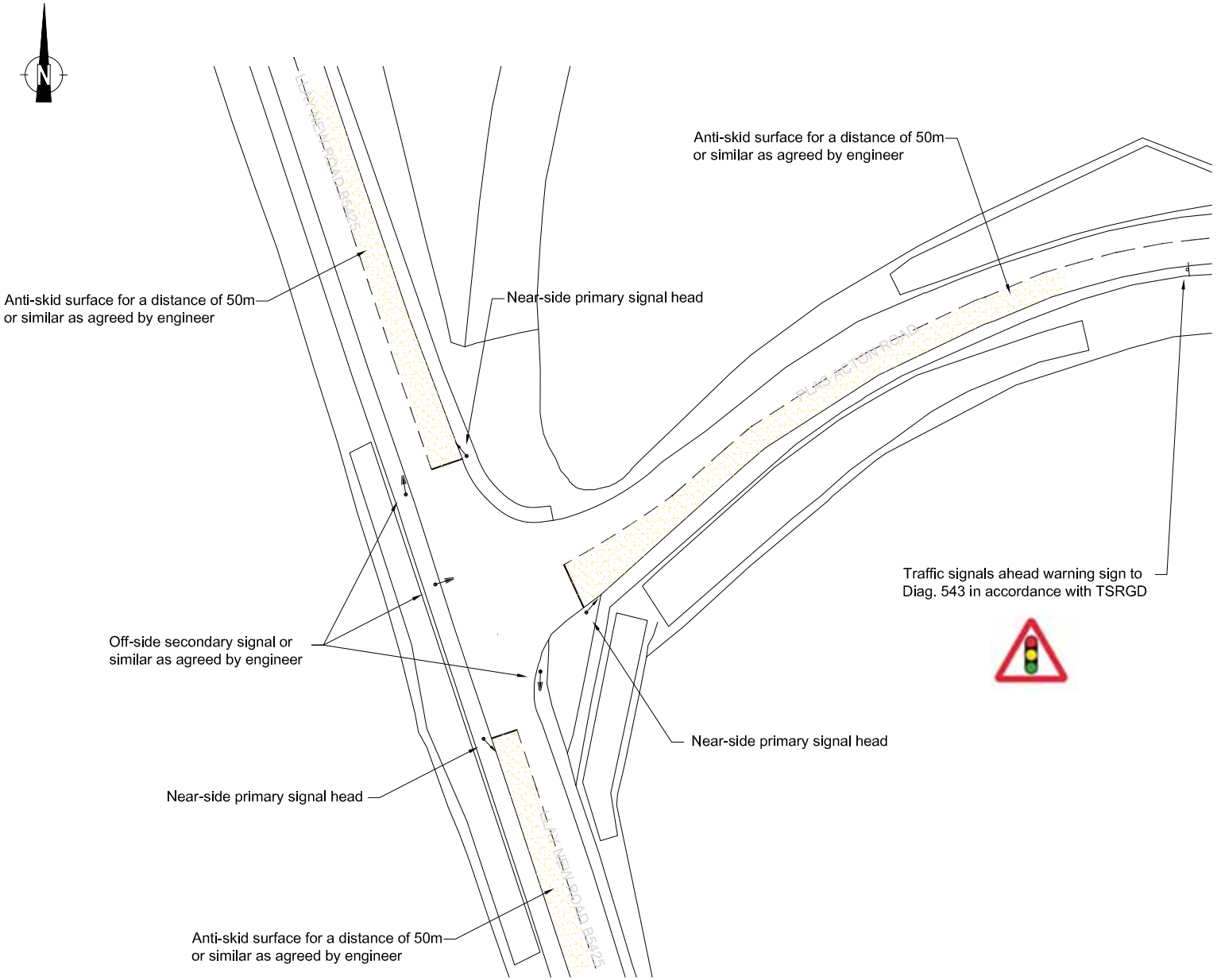

This drawing is the copyright of Cameron Rose Limited and may not be loaned, copied or reproduced in any way, or used for any offer, quote, tender or construction purposes without written consent of the company to do so.

Follow any figured dimensions - do not scale. IF IN DOUBT ASK.

This drawing has been prepared for feasibility purposes and does not represent a construction plan. All design aspects to be confirmed at the appropriate detailed design stage.

•	Revision History	• Date
A	desc	date a
B	desc	date b
C	desc	date c
D	desc	date d
E	desc	date e
F	desc	date f
G	desc	date g
H	desc	date h
I	desc	date i
J	desc	date j

10 King Street
Newcastle-under-Lyme
Staffordshire
ST5 1EL
01782 627029
www.cameron-rose.co.uk
CAMERON ROSE

client: Liberty Properties

project: Rhosrobin
Proposed Residential Development

drawing title: Plas Acton Road / Llay New Road
Proposed Sign Junction
Preliminary Design Proposal

scale(s): 1/500	date: 27/01/16	drawn by: IJM	checked: CAB
drawing number: 074-01/GA-03			
xrefs:		status: Information	
		rev: -	

DATE PRINTED:

Full Input Data And Results

User and Project Details

Project:	**Residential Development, Llay New Road, Rhosrobin**
Title:	
Location:	
File name:	Plas Acton Rd_Llay Rd.lsg3x
Author:	
Company:	Cameron Rose Associates
Address:	Lymedale Business Centre, Hooters Hall Road, Newcastle-under-Lyme, Staffordshire, ST5 9QF
Notes:	

Network Layout Diagram

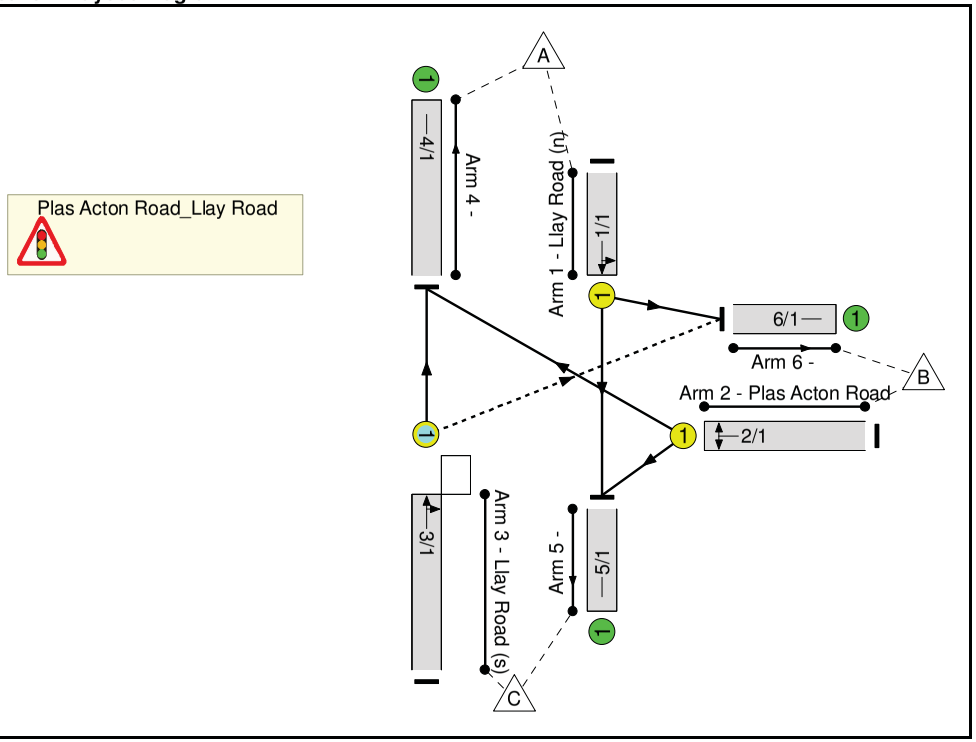

Phase Diagram

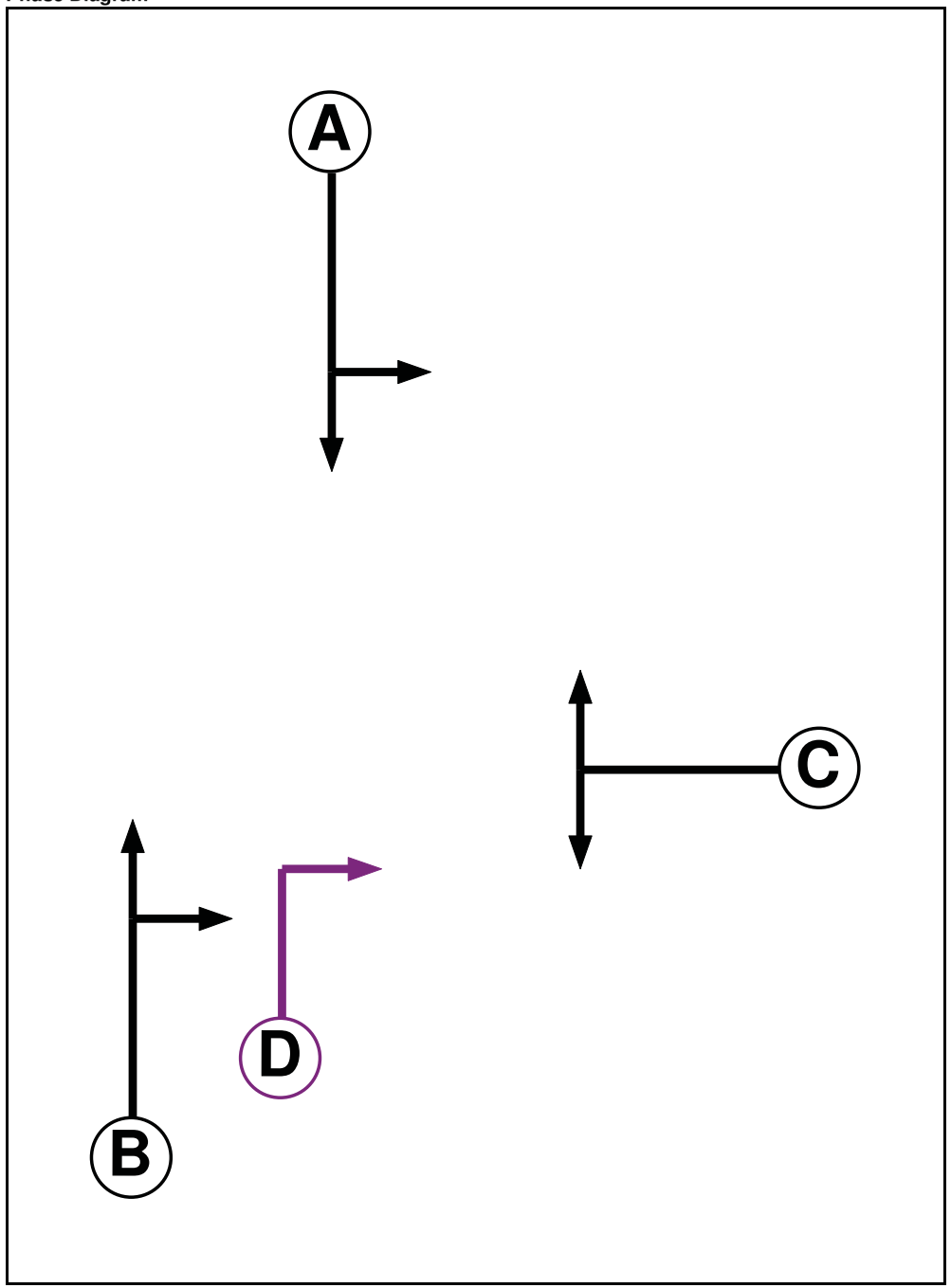

Phase Input Data

Phase Name	Phase Type	Assoc. Phase	Street Min	Cont Min
A	Traffic		7	7
B	Traffic		7	7
C	Traffic		7	7
D	Ind. Arrow	B	4	4

Phase Intergreens Matrix

Terminating Phase \ Starting Phase	A	B	C	D
A		-	6	5
B	-		5	-
C	5	5		5
D	5	-	6	

Phases in Stage

Stage No.	Phases in Stage
1	A B
2	B D
3	C

Stage Diagram

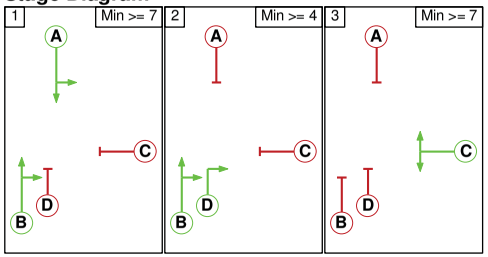

Phase Delays

Term. Stage	Start Stage	Phase	Type	Value	Cont value
There are no Phase Delays defined					

Prohibited Stage Change

From Stage \ To Stage	1	2	3
1		5	6
2	5		6
3	5	5	

Give-Way Lane Input Data

Junction: Plas Acton Road_Llay Road

Lane	Movement	Max Flow when Giving Way (PCU/Hr)	Min Flow when Giving Way (PCU/Hr)	Opposing Lane	Opp. Lane Coeff.	Opp. Mvmnts.	Right Turn Storage (PCU)	Non-Blocking Storage (PCU)	RTF	Right Turn Move up (s)	Max Turns in Intergreen (PCU)
3/1 (Llay Road (s))	6/1 (Right)	1439	0	1/1	1.09	All	2.00	2.00	0.50	2	2.00

Lane Input Data

Junction: Plas Acton Road_Llay Road

Lane	Lane Type	Phases	Start Disp.	End Disp.	Physical Length (PCU)	Sat Flow Type	Def User Saturation Flow (PCU/Hr)	Lane Width (m)	Gradient	Nearside Lane	Turns	Turning Radius (m)
1/1 (Llay Road (n))	U	A	2	3	60.0	Geom	-	3.80	0.00	Y	Arm 5 Ahead	Inf
											Arm 6 Left	10.00
2/1 (Plas Acton Road)	U	C	2	3	60.0	Geom	-	5.00	0.00	Y	Arm 4 Right	20.00
											Arm 5 Left	10.00
3/1 (Llay Road (s))	O	B D	2	3	60.0	Geom	-	3.20	0.00	Y	Arm 4 Ahead	Inf
											Arm 6 Right	15.00
4/1	U		2	3	60.0	Inf	-	-	-	-	-	-
5/1	U		2	3	60.0	Inf	-	-	-	-	-	-
6/1	U		2	3	60.0	Inf	-	-	-	-	-	-

Traffic Flow Groups

Flow Group	Start Time	End Time	Duration	Formula
1: '2026 Base + Committed Development AM'	08:00	09:00	01:00	
2: '2026 Base + Committed Development PM'	16:30	17:30	01:00	
3: '2026 Base + Committed + Development AM'	08:00	09:00	01:00	
4: '2026 Base + Committed + Development PM'	16:30	17:30	01:00	

Scenario 1: '1' (FG1: '2026 Base + Committed Development AM', Plan 1: 'Network Control Plan 1')

Traffic Flows, Desired

Desired Flow :

		Destination			
		A	B	C	Tot.
Origin	A	0	204	435	639
	B	173	0	190	363
	C	228	165	0	393
	Tot.	401	369	625	1395

Traffic Lane Flows

Lane	Scenario 1: 1
Junction: Plas Acton Road_Llay Road	
1/1	639
2/1	363
3/1	393
4/1	401
5/1	625
6/1	369

Lane Saturation Flows

Junction: Plas Acton Road_Llay Road

Lane	Lane Width (m)	Gradient	Nearside Lane	Allowed Turns	Turning Radius (m)	Turning Prop.	Sat Flow (PCU/Hr)	Flared Sat Flow (PCU/Hr)
1/1 (Llay Road (n))	3.80	0.00	Y	Arm 5 Ahead	Inf	68.1 %	1904	1904
				Arm 6 Left	10.00	31.9 %		
2/1 (Plas Acton Road)	5.00	0.00	Y	Arm 4 Right	20.00	47.7 %	1898	1898
				Arm 5 Left	10.00	52.3 %		
3/1 (Llay Road (s))	3.20	0.00	Y	Arm 4 Ahead	Inf	58.0 %	1857	1857
				Arm 6 Right	15.00	42.0 %		
4/1	Infinite Saturation Flow						Inf	Inf
5/1	Infinite Saturation Flow						Inf	Inf
6/1	Infinite Saturation Flow						Inf	Inf

Scenario 2: '2' (FG2: '2026 Base + Committed Development PM', Plan 1: 'Network Control Plan 1')

Traffic Flows, Desired

Desired Flow :

		Destination			
		A	B	C	Tot.
Origin	A	0	151	329	480
	B	197	0	169	366
	C	446	179	0	625
	Tot.	643	330	498	1471

Full Input Data And Results

Traffic Lane Flows

Lane	Scenario 2: 2
Junction: Plas Acton Road_Llay Road	
1/1	480
2/1	366
3/1	625
4/1	643
5/1	498
6/1	330

Lane Saturation Flows

Junction: Plas Acton Road_Llay Road

Lane	Lane Width (m)	Gradient	Nearside Lane	Allowed Turns	Turning Radius (m)	Turning Prop.	Sat Flow (PCU/Hr)	Flared Sat Flow (PCU/Hr)
1/1 (Llay Road (n))	3.80	0.00	Y	Arm 5 Ahead	Inf	68.5 %	1905	1905
				Arm 6 Left	10.00	31.5 %		
2/1 (Plas Acton Road)	5.00	0.00	Y	Arm 4 Right	20.00	53.8 %	1906	1906
				Arm 5 Left	10.00	46.2 %		
3/1 (Llay Road (s))	3.20	0.00	Y	Arm 4 Ahead	Inf	71.4 %	1881	1881
				Arm 6 Right	15.00	28.6 %		
4/1	Infinite Saturation Flow						Inf	Inf
5/1	Infinite Saturation Flow						Inf	Inf
6/1	Infinite Saturation Flow						Inf	Inf

Scenario 3: '3' (FG3: '2026 Base + Committed + Development AM', Plan 1: 'Network Control Plan 1')

Traffic Flows, Desired

Desired Flow :

		Destination			
		A	B	C	Tot.
Origin	A	0	204	439	643
	B	173	0	193	366
	C	240	176	0	416
	Tot.	413	380	632	1425

Full Input Data And Results

Traffic Lane Flows

Lane	Scenario 3: 3
Junction: Plas Acton Road_Llay Road	
1/1	643
2/1	366
3/1	416
4/1	413
5/1	632
6/1	380

Lane Saturation Flows

Junction: Plas Acton Road_Llay Road

Lane	Lane Width (m)	Gradient	Nearside Lane	Allowed Turns	Turning Radius (m)	Turning Prop.	Sat Flow (PCU/Hr)	Flared Sat Flow (PCU/Hr)
1/1 (Llay Road (n))	3.80	0.00	Y	Arm 5 Ahead	Inf	68.3 %	1904	1904
				Arm 6 Left	10.00	31.7 %		
2/1 (Plas Acton Road)	5.00	0.00	Y	Arm 4 Right	20.00	47.3 %	1898	1898
				Arm 5 Left	10.00	52.7 %		
3/1 (Llay Road (s))	3.20	0.00	Y	Arm 4 Ahead	Inf	57.7 %	1856	1856
				Arm 6 Right	15.00	42.3 %		
4/1	Infinite Saturation Flow						Inf	Inf
5/1	Infinite Saturation Flow						Inf	Inf
6/1	Infinite Saturation Flow						Inf	Inf

Scenario 4: '4' (FG4: '2026 Base + Committed + Development PM', Plan 1: 'Network Control Plan 1')

Traffic Flows, Desired

Desired Flow :

		Destination			
		A	B	C	Tot.
Origin	A	0	151	337	488
	B	197	0	173	370
	C	451	181	0	632
	Tot.	648	332	510	1490

Traffic Lane Flows

Lane	Scenario 4: 4
Junction: Plas Acton Road_Llay Road	
1/1	488
2/1	370
3/1	632
4/1	648
5/1	510
6/1	332

Lane Saturation Flows

Junction: Plas Acton Road_Llay Road

Lane	Lane Width (m)	Gradient	Nearside Lane	Allowed Turns	Turning Radius (m)	Turning Prop.	Sat Flow (PCU/Hr)	Flared Sat Flow (PCU/Hr)
1/1 (Llay Road (n))	3.80	0.00	Y	Arm 5 Ahead	Inf	69.1 %	1907	1907
				Arm 6 Left	10.00	30.9 %		
2/1 (Plas Acton Road)	5.00	0.00	Y	Arm 4 Right	20.00	53.2 %	1905	1905
				Arm 5 Left	10.00	46.8 %		
3/1 (Llay Road (s))	3.20	0.00	Y	Arm 4 Ahead	Inf	71.4 %	1881	1881
				Arm 6 Right	15.00	28.6 %		
4/1	Infinite Saturation Flow						Inf	Inf
5/1	Infinite Saturation Flow						Inf	Inf
6/1	Infinite Saturation Flow						Inf	Inf

Scenario 1: '1' (FG1: '2026 Base + Committed Development AM', Plan 1: 'Network Control Plan 1')

Stage Sequence Diagram

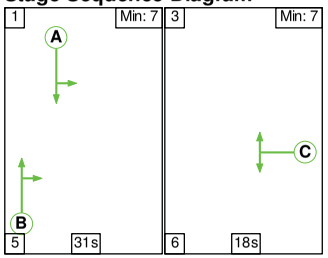

Stage Timings

Stage	1	3
Duration	31	18
Change Point	0	36

Signal Timings Diagram

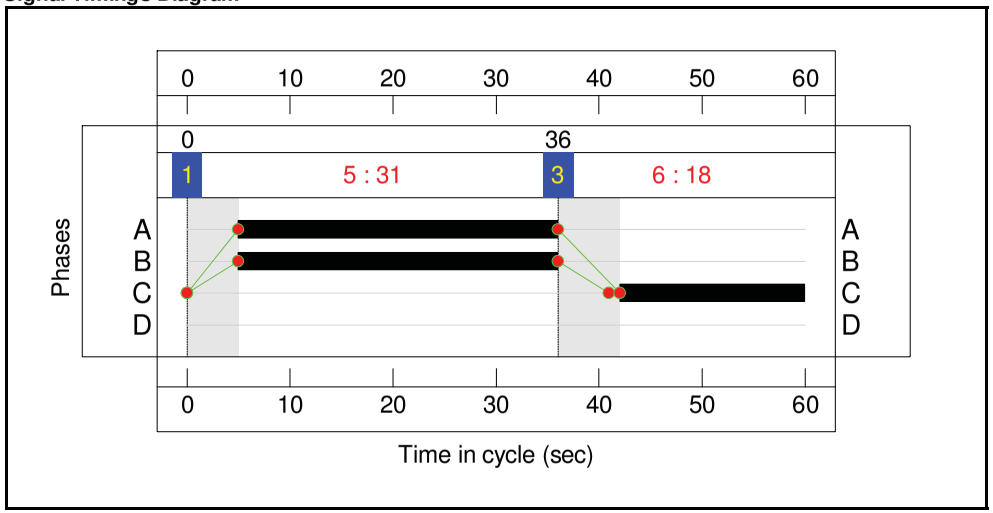

Full Input Data And Results

Network Results

Item	Lane Description	Lane Type	Controller Stream	Position In Filtered Route	Full Phase	Arrow Phase	Num Greens	Total Green (s)	Arrow Green (s)	Demand Flow (pcu)	Sat Flow (pcu/Hr)	Capacity (pcu)	Deg Sat (%)
Network	**-**	**-**	**N/A**	**-**	**-**		**-**	**-**	**-**	**-**	**-**	**-**	**62.9%**
Plas Acton Road_Llay Road	**-**	**-**	**N/A**	**-**	**-**		**-**	**-**	**-**	**-**	**-**	**-**	**62.9%**
1/1	Llay Road (n) Ahead Left	U	N/A	N/A	A		1	31	-	639	1904	1015	62.9%
2/1	Plas Acton Road Right Left	U	N/A	N/A	C		1	18	-	363	1898	601	60.4%
3/1	Llay Road (s) Ahead Right	O	N/A	N/A	B	D	1	31	0	393	1857	712	55.2%
4/1		U	N/A	N/A	-		-	-	-	401	Inf	Inf	0.0%
5/1		U	N/A	N/A	-		-	-	-	625	Inf	Inf	0.0%
6/1		U	N/A	N/A	-		-	-	-	369	Inf	Inf	0.0%

Item	Arriving (pcu)	Leaving (pcu)	Turners In Gaps (pcu)	Turners When Unopposed (pcu)	Turners In Intergreen (pcu)	Uniform Delay (pcuHr)	Rand + Oversat Delay (pcuHr)	Storage Area Uniform Delay (pcuHr)	Total Delay (pcuHr)	Av. Delay Per PCU (s/pcu)	Max. Back of Uniform Queue (pcu)	Rand + Oversat Queue (pcu)	Mean Max Queue (pcu)
Network	**-**	**-**	**165**	**0**	**0**	**4.4**	**2.2**	**0.5**	**7.1**	**-**	**-**	**-**	**-**
Plas Acton Road_Llay Road	**-**	**-**	**165**	**0**	**0**	**4.4**	**2.2**	**0.5**	**7.1**	**-**	**-**	**-**	**-**
1/1	639	639	-	-	-	1.7	0.8	-	2.6	14.6	7.5	0.8	8.3
2/1	363	363	-	-	-	1.7	0.8	-	2.5	24.8	5.0	0.8	5.8
3/1	393	393	165	0	0	0.9	0.6	0.5	2.0	18.5	3.8	0.6	4.4
4/1	401	401	-	-	-	0.0	0.0	-	0.0	0.0	0.0	0.0	0.0
5/1	625	625	-	-	-	0.0	0.0	-	0.0	0.0	0.0	0.0	0.0
6/1	369	369	-	-	-	0.0	0.0	-	0.0	0.0	0.0	0.0	0.0

C1 PRC for Signalled Lanes (%): 43.0 Total Delay for Signalled Lanes (pcuHr): 7.12 Cycle Time (s): 60
PRC Over All Lanes (%): 43.0 Total Delay Over All Lanes(pcuHr): 7.12

Full Input Data And Results

Scenario 2: '2' (FG2: '2026 Base + Committed Development PM', Plan 1: 'Network Control Plan 1')

Stage Sequence Diagram

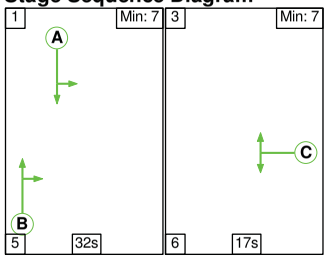

Stage Timings

Stage	1	3
Duration	32	17
Change Point	0	37

Signal Timings Diagram

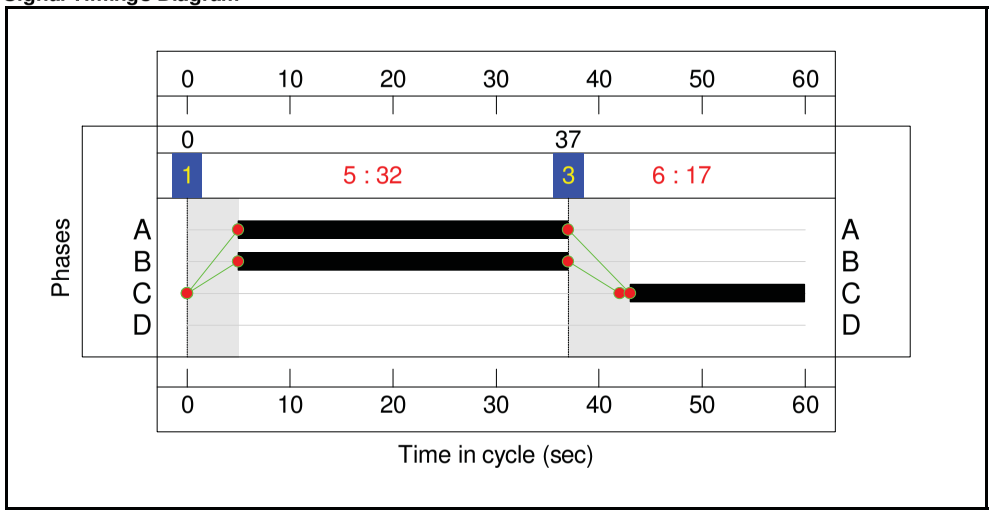

Full Input Data And Results

Network Results

Item	Lane Description	Lane Type	Controller Stream	Position In Filtered Route	Full Phase	Arrow Phase	Num Greens	Total Green (s)	Arrow Green (s)	Demand Flow (pcu)	Sat Flow (pcu/Hr)	Capacity (pcu)	Deg Sat (%)
Network	**-**	**-**	**N/A**	**-**	**-**		**-**	**-**	**-**	**-**	**-**	**-**	**64.0%**
Plas Acton Road_Llay Road	**-**	**-**	**N/A**	**-**	**-**		**-**	**-**	**-**	**-**	**-**	**-**	**64.0%**
1/1	Llay Road (n) Ahead Left	U	N/A	N/A	A		1	32	-	480	1905	1048	45.8%
2/1	Plas Acton Road Right Left	U	N/A	N/A	C		1	17	-	366	1906	572	64.0%
3/1	Llay Road (s) Ahead Right	O	N/A	N/A	B	D	1	32	0	625	1881	993	63.0%
4/1		U	N/A	N/A	-		-	-	-	643	Inf	Inf	0.0%
5/1		U	N/A	N/A	-		-	-	-	498	Inf	Inf	0.0%
6/1		U	N/A	N/A	-		-	-	-	330	Inf	Inf	0.0%

Item	Arriving (pcu)	Leaving (pcu)	Turners In Gaps (pcu)	Turners When Unopposed (pcu)	Turners In Intergreen (pcu)	Uniform Delay (pcuHr)	Rand + Oversat Delay (pcuHr)	Storage Area Uniform Delay (pcuHr)	Total Delay (pcuHr)	Av. Delay Per PCU (s/pcu)	Max. Back of Uniform Queue (pcu)	Rand + Oversat Queue (pcu)	Mean Max Queue (pcu)
Network	**-**	**-**	**179**	**0**	**0**	**4.5**	**2.1**	**0.2**	**6.9**	**-**	**-**	**-**	**-**
Plas Acton Road_Llay Road	**-**	**-**	**179**	**0**	**0**	**4.5**	**2.1**	**0.2**	**6.9**	**-**	**-**	**-**	**-**
1/1	480	480	-	-	-	1.1	0.4	-	1.5	11.3	4.8	0.4	5.2
2/1	366	366	-	-	-	1.8	0.9	-	2.7	26.9	5.2	0.9	6.1
3/1	625	625	179	0	0	1.6	0.8	0.2	2.7	15.3	7.3	0.8	8.1
4/1	643	643	-	-	-	0.0	0.0	-	0.0	0.0	0.0	0.0	0.0
5/1	498	498	-	-	-	0.0	0.0	-	0.0	0.0	0.0	0.0	0.0
6/1	330	330	-	-	-	0.0	0.0	-	0.0	0.0	0.0	0.0	0.0

C1 PRC for Signalled Lanes (%): 40.6 Total Delay for Signalled Lanes (pcuHr): 6.90 Cycle Time (s): 60
PRC Over All Lanes (%): 40.6 Total Delay Over All Lanes(pcuHr): 6.90

Full Input Data And Results

Scenario 3: '3' (FG3: '2026 Base + Committed + Development AM', Plan 1: 'Network Control Plan 1')

Stage Sequence Diagram

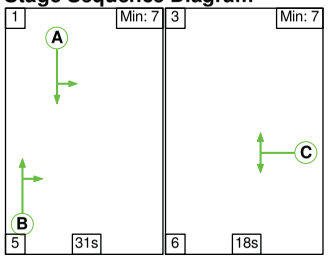

Stage Timings

Stage	1	3
Duration	31	18
Change Point	0	36

Signal Timings Diagram

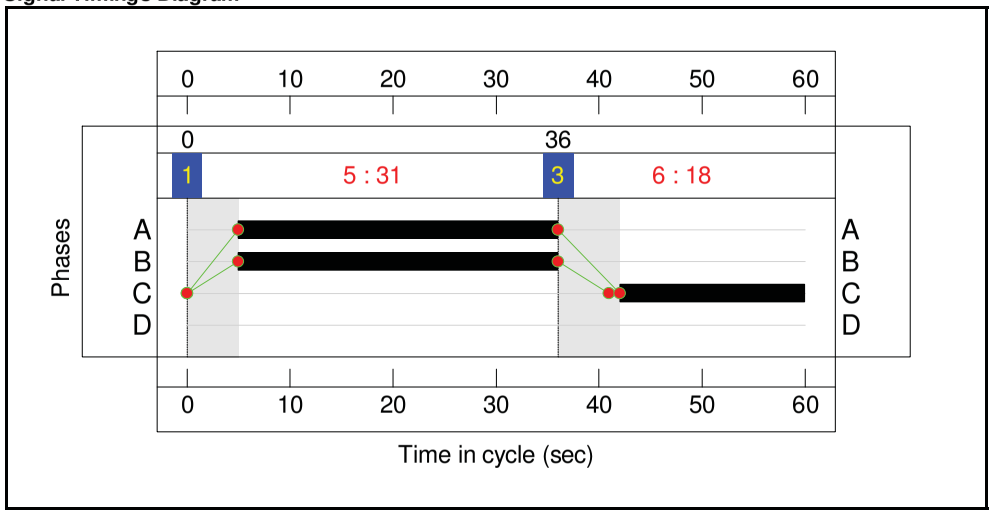

Full Input Data And Results

Network Results

Item	Lane Description	Lane Type	Controller Stream	Position In Filtered Route	Full Phase	Arrow Phase	Num Greens	Total Green (s)	Arrow Green (s)	Demand Flow (pcu)	Sat Flow (pcu/Hr)	Capacity (pcu)	Deg Sat (%)
Network	-	-	**N/A**	-	-		-	-	-	-	-	-	**63.3%**
Plas Acton Road_Llay Road	-	-	**N/A**	-	-		-	-	-	-	-	-	**63.3%**
1/1	Llay Road (n) Ahead Left	U	N/A	N/A	A		1	31	-	643	1904	1015	63.3%
2/1	Plas Acton Road Right Left	U	N/A	N/A	C		1	18	-	366	1898	601	60.9%
3/1	Llay Road (s) Ahead Right	O	N/A	N/A	B	D	1	31	0	416	1856	699	59.5%
4/1		U	N/A	N/A	-		-	-	-	413	Inf	Inf	0.0%
5/1		U	N/A	N/A	-		-	-	-	632	Inf	Inf	0.0%
6/1		U	N/A	N/A	-		-	-	-	380	Inf	Inf	0.0%

Item	Arriving (pcu)	Leaving (pcu)	Turners In Gaps (pcu)	Turners When Unopposed (pcu)	Turners In Intergreen (pcu)	Uniform Delay (pcuHr)	Rand + Oversat Delay (pcuHr)	Storage Area Uniform Delay (pcuHr)	Total Delay (pcuHr)	Av. Delay Per PCU (s/pcu)	Max. Back of Uniform Queue (pcu)	Rand + Oversat Queue (pcu)	Mean Max Queue (pcu)
Network	-	-	**176**	**0**	**0**	**4.5**	**2.4**	**0.5**	**7.4**	-	-	-	-
Plas Acton Road_Llay Road	-	-	**176**	**0**	**0**	**4.5**	**2.4**	**0.5**	**7.4**	-	-	-	-
1/1	643	643	-	-	-	1.8	0.9	-	2.6	14.7	7.5	0.9	8.4
2/1	366	366	-	-	-	1.8	0.8	-	2.5	25.0	5.1	0.8	5.9
3/1	416	416	176	0	0	1.0	0.7	0.5	2.3	19.7	4.2	0.7	4.9
4/1	413	413	-	-	-	0.0	0.0	-	0.0	0.0	0.0	0.0	0.0
5/1	632	632	-	-	-	0.0	0.0	-	0.0	0.0	0.0	0.0	0.0
6/1	380	380	-	-	-	0.0	0.0	-	0.0	0.0	0.0	0.0	0.0

C1 PRC for Signalled Lanes (%): 42.1 Total Delay for Signalled Lanes (pcuHr): 7.44 Cycle Time (s): 60
PRC Over All Lanes (%): 42.1 Total Delay Over All Lanes(pcuHr): 7.44

Full Input Data And Results

Scenario 4: '4' (FG4: '2026 Base + Committed + Development PM', Plan 1: 'Network Control Plan 1')

Stage Sequence Diagram

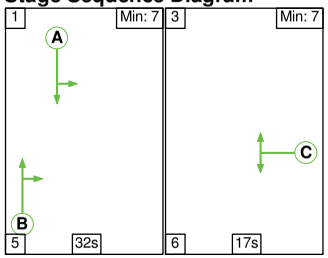

Stage Timings

Stage	1	3
Duration	32	17
Change Point	0	37

Signal Timings Diagram

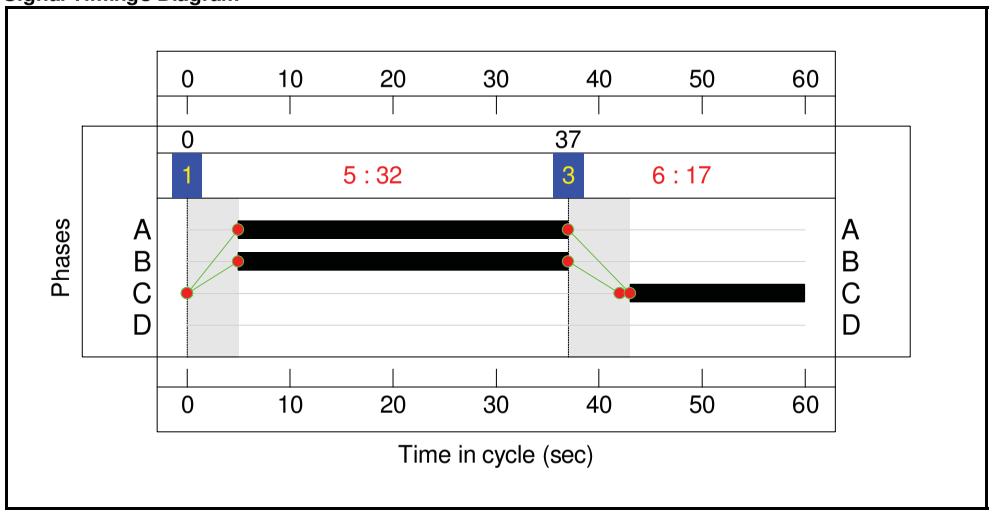

Full Input Data And Results

Network Results

Item	Lane Description	Lane Type	Controller Stream	Position In Filtered Route	Full Phase	Arrow Phase	Num Greens	Total Green (s)	Arrow Green (s)	Demand Flow (pcu)	Sat Flow (pcu/Hr)	Capacity (pcu)	Deg Sat (%)
Network	**-**	**-**	**N/A**	**-**	**-**		**-**	**-**	**-**	**-**	**-**	**-**	**64.7%**
Plas Acton Road_Llay Road	**-**	**-**	**N/A**	**-**	**-**		**-**	**-**	**-**	**-**	**-**	**-**	**64.7%**
1/1	Llay Road (n) Ahead Left	U	N/A	N/A	A		1	32	-	488	1907	1049	46.5%
2/1	Plas Acton Road Right Left	U	N/A	N/A	C		1	17	-	370	1905	572	64.7%
3/1	Llay Road (s) Ahead Right	O	N/A	N/A	B	D	1	32	0	632	1881	993	63.7%
4/1		U	N/A	N/A	-		-	-	-	648	Inf	Inf	0.0%
5/1		U	N/A	N/A	-		-	-	-	510	Inf	Inf	0.0%
6/1		U	N/A	N/A	-		-	-	-	332	Inf	Inf	0.0%

Item	Arriving (pcu)	Leaving (pcu)	Turners In Gaps (pcu)	Turners When Unopposed (pcu)	Turners In Intergreen (pcu)	Uniform Delay (pcuHr)	Rand + Oversat Delay (pcuHr)	Storage Area Uniform Delay (pcuHr)	Total Delay (pcuHr)	Av. Delay Per PCU (s/pcu)	Max. Back of Uniform Queue (pcu)	Rand + Oversat Queue (pcu)	Mean Max Queue (pcu)
Network	**-**	**-**	**181**	**0**	**0**	**4.6**	**2.2**	**0.2**	**7.1**	**-**	**-**	**-**	**-**
Plas Acton Road_Llay Road	**-**	**-**	**181**	**0**	**0**	**4.6**	**2.2**	**0.2**	**7.1**	**-**	**-**	**-**	**-**
1/1	488	488	-	-	-	1.1	0.4	-	1.5	11.4	4.9	0.4	5.3
2/1	370	370	-	-	-	1.9	0.9	-	2.8	27.1	5.3	0.9	6.3
3/1	632	632	181	0	0	1.6	0.9	0.2	2.7	15.6	7.4	0.9	8.2
4/1	648	648	-	-	-	0.0	0.0	-	0.0	0.0	0.0	0.0	0.0
5/1	510	510	-	-	-	0.0	0.0	-	0.0	0.0	0.0	0.0	0.0
6/1	332	332	-	-	-	0.0	0.0	-	0.0	0.0	0.0	0.0	0.0

C1 PRC for Signalled Lanes (%): 39.0 Total Delay for Signalled Lanes (pcuHr): 7.06 Cycle Time (s): 60
PRC Over All Lanes (%): 39.0 Total Delay Over All Lanes(pcuHr): 7.06

APPENDIX J

B5425 LLAY NEW ROAD/ RHOSROBIN ROAD/ SITE ACCESS – PICADY MODEL OUTPUTS

Junctions 8

PICADY 8 - Priority Intersection Module

Version: 8.0.2.316 [14 Feb 2013]
© Copyright TRL Limited, 2021

For sales and distribution information, program advice and maintenance, contact TRL:
Tel: +44 (0)1344 770758 E-mail: software@trl.co.uk Web: http://www.trlsoftware.co.uk

The users of this computer program for the solution of an engineering problem are in no way relieved of their responsibility for the correctness of the solution

Filename: Llay Rd_Rhosrobin.arc8
Path: D:\Cameron Rose Associates\Projects\528_Proposed Residential Development New Llay Road, Rhosrobin\ANALYSIS\PICADY\Llay Road_Rhosrobin\96 units
Report generation date: 11/08/2021 15:53:09

File summary

File Description

Title	B5425 Llay New Road/ Rhosrobin
Location	Rhosrobin
Site Number	
Date	12/08/2019
Version	
Status	
Identifier	
Client	
Jobnumber	528
Enumerator	Cameron Rose Associates
Description	

Analysis Options

Vehicle Length (m)	Do Queue Variations	Calculate Residual Capacity	Residual Capacity Criteria Type	RFC Threshold	Average Delay Threshold (s)	Queue Threshold (PCU)
5.75			N/A	0.85	36.00	20.00

Units

Distance Units	Speed Units	Traffic Units Input	Traffic Units Results	Flow Units	Average Delay Units	Total Delay Units	Rate Of Delay Units
m	kph	PCU	PCU	perHour	s	-Min	perMin

Existing Layout - 2014 Survey, AM

Data Errors and Warnings

No errors or warnings

Analysis Set Details

Name	Description	Locked	Network Flow Scaling Factor (%)	Reason For Scaling Factors
Existing Layout			100.000	

Demand Set Details

Name	Scenario Name	Time Period Name	Description	Traffic Profile Type	Model Start Time (HH:mm)	Model Finish Time (HH:mm)	Model Time Period Length (min)	Time Segment Length (min)	Single Time Segment Only	Locked
2014 Survey, AM	2014 Survey	AM		ONE HOUR	07:45	09:15	90	15		

Junction Network

Junctions

Name	Junction Type	Major Road Direction	Arm Order	Junction Delay (s)	Junction LOS
(untitled)	T-Junction	Two-way	A,B,C	19.94	C

Junction Network Options

Driving Side	Lighting
Left	Normal/unknown

Arms

Arms

Arm	Name	Description	Arm Type
A	B5425 Llay New Road (s)		Major
B	Rhosrobin Road		Minor
C	B5425 Llay New Road (n)		Major

Major Arm Geometry

Arm	Width of carriageway (m)	Has kerbed central reserve	Width of kerbed central reserve (m)	Has right turn bay	Width For Right Turn (m)	Visibility For Right Turn (m)	Blocks?	Blocking Queue (PCU)
C	7.40		0.00		2.20	70.00	✓	1.00

Geometries for Arm C are measured opposite Arm B. Geometries for Arm A (if relevant) are measured opposite Arm D.

Minor Arm Geometry

Arm	Minor Arm Type	Lane Width (m)	Lane Width (Left) (m)	Lane Width (Right) (m)	Width at give-way (m)	Width at 5m (m)	Width at 10m (m)	Width at 15m (m)	Width at 20m (m)	Estimate Flare Length	Flare Length (PCU)	Visibility To Left (m)	Visibility To Right (m)
B	One lane plus flare				10.00	10.00	7.00	5.30	4.60	✓	3.00	70	70

Pedestrian Crossings

Arm	Crossing Type
A	None
B	None
C	None

Slope / Intercept / Capacity

Priority Intersection Slopes and Intercepts

Junction	Stream	Intercept (PCU/hr)	Slope for A-B	Slope for A-C	Slope for C-A	Slope for C-B
1	B-A	607.842	0.104	0.263	0.165	0.375
1	B-C	669.649	0.096	0.244	-	-
1	C-B	614.501	0.224	0.224	-	-

The slopes and intercepts shown above do NOT include any corrections or adjustments.
Streams may be combined, in which case capacity will be adjusted.
Values are shown for the first time segment only; they may differ for subsequent time segments.

Traffic Flows

Demand Set Data Options

Default Vehicle Mix	Vehicle Mix Varies Over Time	Vehicle Mix Varies Over Turn	Vehicle Mix Varies Over Entry	Vehicle Mix Source	PCU Factor for a HV (PCU)	Default Turning Proportions	Estimate from entry/exit counts	Turning Proportions Vary Over Time	Turning Proportions Vary Over Turn	Turning Proportions Vary Over Entry
		✓	✓	HV Percentages	2.00				✓	✓

Entry Flows

General Flows Data

Arm	Profile Type	Use Turning Counts	Average Demand Flow (PCU/hr)	Flow Scaling Factor (%)
A	ONE HOUR	✓	483.00	100.000
B	ONE HOUR	✓	287.00	100.000
C	ONE HOUR	✓	727.00	100.000

Turning Proportions

Turning Counts or Proportions (PCU/hr) - Junction 1 (for whole period)

		To		
		A	B	C
From	A	0.000	144.000	339.000
	B	200.000	0.000	87.000
	C	667.000	60.000	0.000

Turning Proportions (PCU) - Junction 1 (for whole period)

		To		
		A	B	C
From	A	0.00	0.30	0.70
	B	0.70	0.00	0.30
	C	0.92	0.08	0.00

Vehicle Mix

Average PCU Per Vehicle - Junction 1 (for whole period)

		To		
		A	B	C
From	A	1.000	1.000	1.000
	B	1.000	1.000	1.000
	C	1.000	1.000	1.000

Heavy Vehicle Percentages - Junction 1 (for whole period)

		To		
		A	B	C
From	A	0.000	0.000	0.000
	B	0.000	0.000	0.000
	C	0.000	0.000	0.000

Results

Results Summary for whole modelled period

Stream	Max RFC	Max Delay (s)	Max Queue (PCU)	Max LOS
B-C	0.22	10.73	0.28	B
B-A	0.64	28.22	1.67	D
C-AB	0.14	7.44	0.18	A
C-A	-	-	-	-
A-B	-	-	-	-
A-C	-	-	-	-

Main Results for each time segment

Main results: (07:45-08:00)

Stream	Total Demand (PCU/hr)	Entry Flow (PCU/hr)	Pedestrian Demand (Ped/hr)	Capacity (PCU/hr)	RFC	End Queue (PCU)	Delay (s)	LOS
B-C	65.50	64.95	0.00	542.70	0.121	0.14	7.528	A
B-A	150.57	148.46	0.00	429.51	0.351	0.53	12.718	B
C-AB	48.78	48.38	0.00	562.45	0.087	0.10	6.999	A
C-A	498.55	498.55	0.00	-	-	-	-	-
A-B	108.41	108.41	0.00	-	-	-	-	-
A-C	255.22	255.22	0.00	-	-	-	-	-

Main results: (08:00-08:15)

Stream	Total Demand (PCU/hr)	Entry Flow (PCU/hr)	Pedestrian Demand (Ped/hr)	Capacity (PCU/hr)	RFC	End Queue (PCU)	Delay (s)	LOS
B-C	78.21	78.04	0.00	508.13	0.154	0.18	8.366	A
B-A	179.80	178.67	0.00	394.82	0.455	0.81	16.565	C
C-AB	60.45	60.34	0.00	560.46	0.108	0.13	7.198	A
C-A	593.10	593.10	0.00	-	-	-	-	-
A-B	129.45	129.45	0.00	-	-	-	-	-
A-C	304.75	304.75	0.00	-	-	-	-	-

Main results: (08:15-08:30)

Stream	Total Demand (PCU/hr)	Entry Flow (PCU/hr)	Pedestrian Demand (Ped/hr)	Capacity (PCU/hr)	RFC	End Queue (PCU)	Delay (s)	LOS
B-C	95.79	95.40	0.00	435.41	0.220	0.28	10.579	B
B-A	220.20	216.99	0.00	346.76	0.635	1.61	27.081	D
C-AB	79.11	78.90	0.00	562.88	0.141	0.18	7.437	A
C-A	721.33	721.33	0.00	-	-	-	-	-
A-B	158.55	158.55	0.00	-	-	-	-	-
A-C	373.25	373.25	0.00	-	-	-	-	-

Main results: (08:30-08:45)

Stream	Total Demand (PCU/hr)	Entry Flow (PCU/hr)	Pedestrian Demand (Ped/hr)	Capacity (PCU/hr)	RFC	End Queue (PCU)	Delay (s)	LOS
B-C	95.79	95.77	0.00	431.21	0.222	0.28	10.732	B
B-A	220.20	219.98	0.00	346.90	0.635	1.67	28.224	D
C-AB	79.11	79.10	0.00	562.88	0.141	0.18	7.442	A
C-A	721.33	721.33	0.00	-	-	-	-	-

A-B	158.55	158.55	0.00	-	-	-	-	-
A-C	373.25	373.25	0.00	-	-	-	-	-

Main results: (08:45-09:00)

Stream	Total Demand (PCU/hr)	Entry Flow (PCU/hr)	Pedestrian Demand (Ped/hr)	Capacity (PCU/hr)	RFC	End Queue (PCU)	Delay (s)	LOS
B-C	78.21	78.60	0.00	504.92	0.155	0.19	8.451	A
B-A	179.80	183.03	0.00	395.14	0.455	0.86	17.217	C
C-AB	60.45	60.66	0.00	560.46	0.108	0.13	7.205	A
C-A	593.10	593.10	0.00	-	-	-	-	-
A-B	129.45	129.45	0.00	-	-	-	-	-
A-C	304.75	304.75	0.00	-	-	-	-	-

Main results: (09:00-09:15)

Stream	Total Demand (PCU/hr)	Entry Flow (PCU/hr)	Pedestrian Demand (Ped/hr)	Capacity (PCU/hr)	RFC	End Queue (PCU)	Delay (s)	LOS
B-C	65.50	65.68	0.00	540.84	0.121	0.14	7.578	A
B-A	150.57	151.81	0.00	429.62	0.350	0.55	13.017	B
C-AB	48.78	48.90	0.00	562.45	0.087	0.10	7.011	A
C-A	498.55	498.55	0.00	-	-	-	-	-
A-B	108.41	108.41	0.00	-	-	-	-	-
A-C	255.22	255.22	0.00	-	-	-	-	-

Existing Layout - 2014 Survey, PM

Data Errors and Warnings

No errors or warnings

Analysis Set Details

Name	Description	Locked	Network Flow Scaling Factor (%)	Reason For Scaling Factors
Existing Layout			100.000	

Demand Set Details

Name	Scenario Name	Time Period Name	Description	Traffic Profile Type	Model Start Time (HH:mm)	Model Finish Time (HH:mm)	Model Time Period Length (min)	Time Segment Length (min)	Single Time Segment Only	Locked
2014 Survey, PM	2014 Survey	PM		ONE HOUR	16:15	17:45	90	15		

Junction Network

Junctions

Name	Junction Type	Major Road Direction	Arm Order	Junction Delay (s)	Junction LOS
(untitled)	T-Junction	Two-way	A,B,C	17.91	C

Junction Network Options

Driving Side	Lighting
Left	Normal/unknown

Arms

Arms

Arm	Name	Description	Arm Type
A	B5425 Llay New Road (s)		Major
B	Rhosrobin Road		Minor
C	B5425 Llay New Road (n)		Major

Major Arm Geometry

Arm	Width of carriageway (m)	Has kerbed central reserve	Width of kerbed central reserve (m)	Has right turn bay	Width For Right Turn (m)	Visibility For Right Turn (m)	Blocks?	Blocking Queue (PCU)
C	7.40		0.00		2.20	70.00	✓	1.00

Geometries for Arm C are measured opposite Arm B. Geometries for Arm A (if relevant) are measured opposite Arm D.

Minor Arm Geometry

Arm	Minor Arm Type	Lane Width (m)	Lane Width (Left) (m)	Lane Width (Right) (m)	Width at give-way (m)	Width at 5m (m)	Width at 10m (m)	Width at 15m (m)	Width at 20m (m)	Estimate Flare Length	Flare Length (PCU)	Visibility To Left (m)	Visibility To Right (m)
B	One lane plus flare				10.00	10.00	7.00	5.30	4.60	✓	3.00	70	70

Pedestrian Crossings

Arm	Crossing Type
A	None
B	None
C	None

Slope / Intercept / Capacity

Priority Intersection Slopes and Intercepts

Junction	Stream	Intercept (PCU/hr)	Slope for A-B	Slope for A-C	Slope for C-A	Slope for C-B
1	B-A	607.586	0.104	0.263	0.165	0.375
1	B-C	669.968	0.096	0.244	-	-
1	C-B	614.501	0.224	0.224	-	-

The slopes and intercepts shown above do NOT include any corrections or adjustments.
Streams may be combined, in which case capacity will be adjusted.
Values are shown for the first time segment only; they may differ for subsequent time segments.

Traffic Flows

Demand Set Data Options

Default Vehicle Mix	Vehicle Mix Varies Over Time	Vehicle Mix Varies Over Turn	Vehicle Mix Varies Over Entry	Vehicle Mix Source	PCU Factor for a HV (PCU)	Default Turning Proportions	Estimate from entry/exit counts	Turning Proportions Vary Over Time	Turning Proportions Vary Over Turn	Turning Proportions Vary Over Entry
		✓	✓	HV Percentages	2.00				✓	✓

Entry Flows

General Flows Data

Arm	Profile Type	Use Turning Counts	Average Demand Flow (PCU/hr)	Flow Scaling Factor (%)
A	ONE HOUR	✓	809.00	100.000
B	ONE HOUR	✓	220.00	100.000

C	ONE HOUR	✓	515.00	100.000

Turning Proportions

Turning Counts or Proportions (PCU/hr) - Junction 1 (for whole period)

		To		
		A	B	C
From	A	0.000	252.000	557.000
	B	153.000	0.000	67.000
	C	421.000	94.000	0.000

Turning Proportions (PCU) - Junction 1 (for whole period)

		To		
		A	B	C
From	A	0.00	0.31	0.69
	B	0.70	0.00	0.30
	C	0.82	0.18	0.00

Vehicle Mix

Average PCU Per Vehicle - Junction 1 (for whole period)

		To		
		A	B	C
From	A	1.000	1.000	1.000
	B	1.000	1.000	1.000
	C	1.000	1.000	1.000

Heavy Vehicle Percentages - Junction 1 (for whole period)

		To		
		A	B	C
From	A	0.000	0.000	0.000
	B	0.000	0.000	0.000
	C	0.000	0.000	0.000

Results

Results Summary for whole modelled period

Stream	Max RFC	Max Delay (s)	Max Queue (PCU)	Max LOS
B-C	0.18	10.91	0.22	B
B-A	0.56	26.88	1.22	D
C-AB	0.27	9.83	0.42	A
C-A	-	-	-	-
A-B	-	-	-	-
A-C	-	-	-	-

Main Results for each time segment

Main results: (16:15-16:30)

Stream	Total Demand (PCU/hr)	Entry Flow (PCU/hr)	Pedestrian Demand (Ped/hr)	Capacity (PCU/hr)	RFC	End Queue (PCU)	Delay (s)	LOS
B-C	50.44	50.01	0.00	509.06	0.099	0.11	7.835	A
B-A	115.19	113.59	0.00	398.78	0.289	0.40	12.557	B
C-AB	77.71	76.95	0.00	511.88	0.152	0.19	8.265	A
C-A	310.01	310.01	0.00	-	-	-	-	-
A-B	189.72	189.72	0.00	-	-	-	-	-
A-C	419.34	419.34	0.00	-	-	-	-	-

Main results: (16:30-16:45)

Stream	Total Demand (PCU/hr)	Entry Flow (PCU/hr)	Pedestrian Demand (Ped/hr)	Capacity (PCU/hr)	RFC	End Queue (PCU)	Delay (s)	LOS
B-C	60.23	60.09	0.00	471.86	0.128	0.14	8.740	A
B-A	137.54	136.71	0.00	358.06	0.384	0.61	16.200	C
C-AB	97.74	97.45	0.00	502.89	0.194	0.26	8.876	A
C-A	365.24	365.24	0.00	-	-	-	-	-
A-B	226.54	226.54	0.00	-	-	-	-	-
A-C	500.73	500.73	0.00	-	-	-	-	-

Main results: (16:45-17:00)

Stream	Total Demand (PCU/hr)	Entry Flow (PCU/hr)	Pedestrian Demand (Ped/hr)	Capacity (PCU/hr)	RFC	End Queue (PCU)	Delay (s)	LOS
B-C	73.77	73.47	0.00	406.11	0.182	0.22	10.812	B
B-A	168.46	166.13	0.00	301.87	0.558	1.19	26.067	D
C-AB	132.28	131.67	0.00	498.84	0.265	0.41	9.801	A
C-A	434.75	434.75	0.00	-	-	-	-	-
A-B	277.46	277.46	0.00	-	-	-	-	-
A-C	613.27	613.27	0.00	-	-	-	-	-

Main results: (17:00-17:15)

Stream	Total Demand (PCU/hr)	Entry Flow (PCU/hr)	Pedestrian Demand (Ped/hr)	Capacity (PCU/hr)	RFC	End Queue (PCU)	Delay (s)	LOS
B-C	73.77	73.76	0.00	403.66	0.183	0.22	10.912	B
B-A	168.46	168.32	0.00	301.86	0.558	1.22	26.878	D
C-AB	132.28	132.26	0.00	498.84	0.265	0.42	9.833	A
C-A	434.75	434.75	0.00	-	-	-	-	-
A-B	277.46	277.46	0.00	-	-	-	-	-
A-C	613.27	613.27	0.00	-	-	-	-	-

Main results: (17:15-17:30)

Stream	Total Demand (PCU/hr)	Entry Flow (PCU/hr)	Pedestrian Demand (Ped/hr)	Capacity (PCU/hr)	RFC	End Queue (PCU)	Delay (s)	LOS
B-C	60.23	60.52	0.00	469.76	0.128	0.15	8.802	A
B-A	137.54	139.87	0.00	358.14	0.384	0.64	16.662	C
C-AB	97.74	98.33	0.00	502.89	0.194	0.27	8.915	A
C-A	365.24	365.24	0.00	-	-	-	-	-
A-B	226.54	226.54	0.00	-	-	-	-	-
A-C	500.73	500.73	0.00	-	-	-	-	-

Main results: (17:30-17:45)

Stream	Total Demand (PCU/hr)	Entry Flow (PCU/hr)	Pedestrian Demand (Ped/hr)	Capacity (PCU/hr)	RFC	End Queue (PCU)	Delay (s)	LOS
B-C	50.44	50.59	0.00	507.71	0.099	0.11	7.879	A
B-A	115.19	116.09	0.00	398.66	0.289	0.41	12.780	B

C-AB	77.71	78.02	0.00	511.88	0.152	0.19	8.305	A
C-A	310.01	310.01	0.00	-	-	-	-	-
A-B	189.72	189.72	0.00	-	-	-	-	-
A-C	419.34	419.34	0.00	-	-	-	-	-

Existing Layout - 2021 Base, AM

Data Errors and Warnings

No errors or warnings

Analysis Set Details

Name	Description	Locked	Network Flow Scaling Factor (%)	Reason For Scaling Factors
Existing Layout			100.000	

Demand Set Details

Name	Scenario Name	Time Period Name	Description	Traffic Profile Type	Model Start Time (HH:mm)	Model Finish Time (HH:mm)	Model Time Period Length (min)	Time Segment Length (min)	Single Time Segment Only	Locked
2021 Base, AM	2021 Base	AM		ONE HOUR	07:45	09:15	90	15		

Junction Network

Junctions

Name	Junction Type	Major Road Direction	Arm Order	Junction Delay (s)	Junction LOS
(untitled)	T-Junction	Two-way	A,B,C	28.35	D

Junction Network Options

Driving Side	Lighting
Left	Normal/unknown

Arms

Arms

Arm	Name	Description	Arm Type
A	B5425 Llay New Road (s)		Major
B	Rhosrobin Road		Minor
C	B5425 Llay New Road (n)		Major

Major Arm Geometry

Arm	Width of carriageway (m)	Has kerbed central reserve	Width of kerbed central reserve (m)	Has right turn bay	Width For Right Turn (m)	Visibility For Right Turn (m)	Blocks?	Blocking Queue (PCU)
C	7.40		0.00		2.20	70.00	✓	1.00

Geometries for Arm C are measured opposite Arm B. Geometries for Arm A (if relevant) are measured opposite Arm D.

Minor Arm Geometry

Arm	Minor Arm Type	Lane Width (m)	Lane Width (Left) (m)	Lane Width (Right) (m)	Width at give-way (m)	Width at 5m (m)	Width at 10m (m)	Width at 15m (m)	Width at 20m (m)	Estimate Flare Length	Flare Length (PCU)	Visibility To Left (m)	Visibility To Right (m)
B	One lane plus flare				10.00	10.00	7.00	5.30	4.60	✓	3.00	70	70

Pedestrian Crossings

Arm	Crossing Type
A	None
B	None
C	None

Slope / Intercept / Capacity

Priority Intersection Slopes and Intercepts

Junction	Stream	Intercept (PCU/hr)	Slope for A-B	Slope for A-C	Slope for C-A	Slope for C-B
1	B-A	607.880	0.104	0.263	0.165	0.375
1	B-C	669.601	0.096	0.244	-	-
1	C-B	614.501	0.224	0.224	-	-

The slopes and intercepts shown above do NOT include any corrections or adjustments.
Streams may be combined, in which case capacity will be adjusted.
Values are shown for the first time segment only; they may differ for subsequent time segments.

Traffic Flows

Demand Set Data Options

Default Vehicle Mix	Vehicle Mix Varies Over Time	Vehicle Mix Varies Over Turn	Vehicle Mix Varies Over Entry	Vehicle Mix Source	PCU Factor for a HV (PCU)	Default Turning Proportions	Estimate from entry/exit counts	Turning Proportions Vary Over Time	Turning Proportions Vary Over Turn	Turning Proportions Vary Over Entry
		✓	✓	HV Percentages	2.00				✓	✓

Entry Flows

General Flows Data

Arm	Profile Type	Use Turning Counts	Average Demand Flow (PCU/hr)	Flow Scaling Factor (%)
A	ONE HOUR	✓	525.07	100.000
B	ONE HOUR	✓	312.73	100.000
C	ONE HOUR	✓	791.63	100.000

Turning Proportions

Turning Counts or Proportions (PCU/hr) - Junction 1 (for whole period)

		To		
		A	B	C
From	A	0.000	156.475	368.593
	B	217.998	0.000	94.734
	C	725.970	65.661	0.000

Turning Proportions (PCU) - Junction 1 (for whole period)

		To		
		A	B	C
From	A	0.00	0.30	0.70
	B	0.70	0.00	0.30

	C	0.92	0.08	0.00

Vehicle Mix

Average PCU Per Vehicle - Junction 1 (for whole period)

		To		
		A	B	C
From	A	1.000	1.000	1.000
	B	1.000	1.000	1.000
	C	1.000	1.000	1.000

Heavy Vehicle Percentages - Junction 1 (for whole period)

		To		
		A	B	C
From	A	0.000	0.000	0.000
	B	0.000	0.000	0.000
	C	0.000	0.000	0.000

Results

Results Summary for whole modelled period

Stream	Max RFC	Max Delay (s)	Max Queue (PCU)	Max LOS
B-C	0.29	14.10	0.40	B
B-A	0.74	41.89	2.65	E
C-AB	0.16	7.56	0.22	A
C-A	-	-	-	-
A-B	-	-	-	-
A-C	-	-	-	-

Main Results for each time segment

Main results: (07:45-08:00)

Stream	Total Demand (PCU/hr)	Entry Flow (PCU/hr)	Pedestrian Demand (Ped/hr)	Capacity (PCU/hr)	RFC	End Queue (PCU)	Delay (s)	LOS
B-C	71.32	70.70	0.00	528.44	0.135	0.15	7.855	A
B-A	164.12	161.56	0.00	413.75	0.397	0.64	14.139	B
C-AB	54.26	53.81	0.00	561.45	0.097	0.11	7.085	A
C-A	541.72	541.72	0.00	-	-	-	-	-
A-B	117.80	117.80	0.00	-	-	-	-	-
A-C	277.50	277.50	0.00	-	-	-	-	-

Main results: (08:00-08:15)

Stream	Total Demand (PCU/hr)	Entry Flow (PCU/hr)	Pedestrian Demand (Ped/hr)	Capacity (PCU/hr)	RFC	End Queue (PCU)	Delay (s)	LOS
B-C	85.16	84.94	0.00	484.79	0.176	0.21	8.999	A
B-A	195.98	194.36	0.00	375.96	0.521	1.04	19.643	C
C-AB	67.81	67.66	0.00	561.06	0.121	0.15	7.294	A
C-A	643.85	643.85	0.00	-	-	-	-	-
A-B	140.67	140.67	0.00	-	-	-	-	-
A-C	331.36	331.36	0.00	-	-	-	-	-

Main results: (08:15-08:30)

Stream	Total Demand (PCU/hr)	Entry Flow (PCU/hr)	Pedestrian Demand (Ped/hr)	Capacity (PCU/hr)	RFC	End Queue (PCU)	Delay (s)	LOS
B-C	104.30	103.62	0.00	371.36	0.281	0.38	13.411	B
B-A	240.02	234.26	0.00	323.48	0.742	2.48	38.107	E
C-AB	90.04	89.77	0.00	566.83	0.159	0.21	7.546	A
C-A	781.57	781.57	0.00	-	-	-	-	-
A-B	172.28	172.28	0.00	-	-	-	-	-
A-C	405.83	405.83	0.00	-	-	-	-	-

Main results: (08:30-08:45)

Stream	Total Demand (PCU/hr)	Entry Flow (PCU/hr)	Pedestrian Demand (Ped/hr)	Capacity (PCU/hr)	RFC	End Queue (PCU)	Delay (s)	LOS
B-C	104.30	104.23	0.00	359.45	0.290	0.40	14.104	B
B-A	240.02	239.37	0.00	323.69	0.742	2.65	41.894	E
C-AB	90.04	90.03	0.00	566.83	0.159	0.22	7.555	A
C-A	781.57	781.57	0.00	-	-	-	-	-
A-B	172.28	172.28	0.00	-	-	-	-	-
A-C	405.83	405.83	0.00	-	-	-	-	-

Main results: (08:45-09:00)

Stream	Total Demand (PCU/hr)	Entry Flow (PCU/hr)	Pedestrian Demand (Ped/hr)	Capacity (PCU/hr)	RFC	End Queue (PCU)	Delay (s)	LOS
B-C	85.16	85.89	0.00	477.84	0.178	0.22	9.203	A
B-A	195.98	202.02	0.00	376.48	0.521	1.13	21.283	C
C-AB	67.81	68.06	0.00	561.06	0.121	0.15	7.309	A
C-A	643.85	643.85	0.00	-	-	-	-	-
A-B	140.67	140.67	0.00	-	-	-	-	-
A-C	331.36	331.36	0.00	-	-	-	-	-

Main results: (09:00-09:15)

Stream	Total Demand (PCU/hr)	Entry Flow (PCU/hr)	Pedestrian Demand (Ped/hr)	Capacity (PCU/hr)	RFC	End Queue (PCU)	Delay (s)	LOS
B-C	71.32	71.57	0.00	525.77	0.136	0.16	7.930	A
B-A	164.12	165.96	0.00	413.92	0.397	0.67	14.622	B
C-AB	54.26	54.41	0.00	561.45	0.097	0.12	7.102	A
C-A	541.72	541.72	0.00	-	-	-	-	-
A-B	117.80	117.80	0.00	-	-	-	-	-
A-C	277.50	277.50	0.00	-	-	-	-	-

Existing Layout - 2021 Base, PM

Data Errors and Warnings

No errors or warnings

Analysis Set Details

Name	Description	Locked	Network Flow Scaling Factor (%)	Reason For Scaling Factors
Existing Layout			100.000	

Demand Set Details

Name	Scenario	Time	Description	Traffic	Model Start	Model Finish	Model Time	Time	Single Time	Locked

	Name	Period Name		Profile Type	Time (HH:mm)	Time (HH:mm)	Period Length (min)	Segment Length (min)	Segment Only	
2021 Base, PM	2021 Base	PM		ONE HOUR	16:15	17:45	90	15		

Junction Network

Junctions

Name	Junction Type	Major Road Direction	Arm Order	Junction Delay (s)	Junction LOS
(untitled)	T-Junction	Two-way	A,B,C	23.90	C

Junction Network Options

Driving Side	Lighting
Left	Normal/unknown

Arms

Arms

Arm	Name	Description	Arm Type
A	B5425 Llay New Road (s)		Major
B	Rhosrobin Road		Minor
C	B5425 Llay New Road (n)		Major

Major Arm Geometry

Arm	Width of carriageway (m)	Has kerbed central reserve	Width of kerbed central reserve (m)	Has right turn bay	Width For Right Turn (m)	Visibility For Right Turn (m)	Blocks?	Blocking Queue (PCU)
C	7.40		0.00		2.20	70.00	✓	1.00

Geometries for Arm C are measured opposite Arm B. Geometries for Arm A (if relevant) are measured opposite Arm D.

Minor Arm Geometry

Arm	Minor Arm Type	Lane Width (m)	Lane Width (Left) (m)	Lane Width (Right) (m)	Width at give-way (m)	Width at 5m (m)	Width at 10m (m)	Width at 15m (m)	Width at 20m (m)	Estimate Flare Length	Flare Length (PCU)	Visibility To Left (m)	Visibility To Right (m)
B	One lane plus flare				10.00	10.00	7.00	5.30	4.60	✓	3.00	70	70

Pedestrian Crossings

Arm	Crossing Type
A	None
B	None
C	None

Slope / Intercept / Capacity

Priority Intersection Slopes and Intercepts

Junction	Stream	Intercept (PCU/hr)	Slope for A-B	Slope for A-C	Slope for C-A	Slope for C-B
1	B-A	607.383	0.104	0.263	0.165	0.375
1	B-C	670.222	0.096	0.244	-	-
1	C-B	614.501	0.224	0.224	-	-

The slopes and intercepts shown above do NOT include any corrections or adjustments.

Streams may be combined, in which case capacity will be adjusted.
Values are shown for the first time segment only; they may differ for subsequent time segments.

Traffic Flows

Demand Set Data Options

Default Vehicle Mix	Vehicle Mix Varies Over Time	Vehicle Mix Varies Over Turn	Vehicle Mix Varies Over Entry	Vehicle Mix Source	PCU Factor for a HV (PCU)	Default Turning Proportions	Estimate from entry/exit counts	Turning Proportions Vary Over Time	Turning Proportions Vary Over Turn	Turning Proportions Vary Over Entry
		✓	✓	HV Percentages	2.00				✓	✓

Entry Flows

General Flows Data

Arm	Profile Type	Use Turning Counts	Average Demand Flow (PCU/hr)	Flow Scaling Factor (%)
A	ONE HOUR	✓	880.35	100.000
B	ONE HOUR	✓	239.95	100.000
C	ONE HOUR	✓	559.88	100.000

Turning Proportions

Turning Counts or Proportions (PCU/hr) - Junction 1 (for whole period)

		To		
		A	B	C
From	A	0.000	274.335	606.019
	B	166.603	0.000	73.345
	C	457.588	102.291	0.000

Turning Proportions (PCU) - Junction 1 (for whole period)

		To		
		A	B	C
From	A	0.00	0.31	0.69
	B	0.69	0.00	0.31
	C	0.82	0.18	0.00

Vehicle Mix

Average PCU Per Vehicle - Junction 1 (for whole period)

		To		
		A	B	C
From	A	1.000	1.000	1.000
	B	1.000	1.000	1.000
	C	1.000	1.000	1.000

Heavy Vehicle Percentages - Junction 1 (for whole period)

		To		
		A	B	C
From	A	0.000	0.000	0.000

	B	0.000	0.000	0.000
	C	0.000	0.000	0.000

Results

Results Summary for whole modelled period

Stream	Max RFC	Max Delay (s)	Max Queue (PCU)	Max LOS
B-C	0.23	13.41	0.30	B
B-A	0.67	38.83	1.89	E
C-AB	0.31	10.37	0.53	B
C-A	-	-	-	-
A-B	-	-	-	-
A-C	-	-	-	-

Main Results for each time segment

Main results: (16:15-16:30)

Stream	Total Demand (PCU/hr)	Entry Flow (PCU/hr)	Pedestrian Demand (Ped/hr)	Capacity (PCU/hr)	RFC	End Queue (PCU)	Delay (s)	LOS
B-C	55.22	54.72	0.00	493.25	0.112	0.12	8.200	A
B-A	125.43	123.50	0.00	380.31	0.330	0.48	13.919	B
C-AB	86.41	85.53	0.00	507.17	0.170	0.22	8.523	A
C-A	335.10	335.10	0.00	-	-	-	-	-
A-B	206.53	206.53	0.00	-	-	-	-	-
A-C	456.24	456.24	0.00	-	-	-	-	-

Main results: (16:30-16:45)

Stream	Total Demand (PCU/hr)	Entry Flow (PCU/hr)	Pedestrian Demand (Ped/hr)	Capacity (PCU/hr)	RFC	End Queue (PCU)	Delay (s)	LOS
B-C	65.94	65.75	0.00	449.43	0.147	0.17	9.379	A
B-A	149.77	148.59	0.00	336.01	0.446	0.78	19.084	C
C-AB	110.13	109.75	0.00	499.99	0.220	0.31	9.222	A
C-A	393.19	393.19	0.00	-	-	-	-	-
A-B	246.62	246.62	0.00	-	-	-	-	-
A-C	544.80	544.80	0.00	-	-	-	-	-

Main results: (16:45-17:00)

Stream	Total Demand (PCU/hr)	Entry Flow (PCU/hr)	Pedestrian Demand (Ped/hr)	Capacity (PCU/hr)	RFC	End Queue (PCU)	Delay (s)	LOS
B-C	80.75	80.28	0.00	355.99	0.227	0.29	13.035	B
B-A	183.43	179.35	0.00	274.80	0.668	1.80	36.258	E
C-AB	153.01	152.19	0.00	500.74	0.306	0.52	10.324	B
C-A	463.43	463.43	0.00	-	-	-	-	-
A-B	302.05	302.05	0.00	-	-	-	-	-
A-C	667.24	667.24	0.00	-	-	-	-	-

Main results: (17:00-17:15)

Stream	Total Demand (PCU/hr)	Entry Flow (PCU/hr)	Pedestrian Demand (Ped/hr)	Capacity (PCU/hr)	RFC	End Queue (PCU)	Delay (s)	LOS
B-C	80.75	80.72	0.00	349.22	0.231	0.30	13.406	B
B-A	183.43	183.06	0.00	274.82	0.667	1.89	38.830	E
C-AB	153.01	152.98	0.00	500.74	0.306	0.53	10.372	B
C-A	463.43	463.43	0.00	-	-	-	-	-
A-B	302.05	302.05	0.00	-	-	-	-	-
A-C	667.24	667.24	0.00	-	-	-	-	-

Main results: (17:15-17:30)

Stream	Total Demand (PCU/hr)	Entry Flow (PCU/hr)	Pedestrian Demand (Ped/hr)	Capacity (PCU/hr)	RFC	End Queue (PCU)	Delay (s)	LOS
B-C	65.94	66.42	0.00	445.28	0.148	0.18	9.515	A
B-A	149.77	154.00	0.00	336.19	0.446	0.83	20.184	C
C-AB	110.13	110.93	0.00	499.99	0.220	0.33	9.279	A
C-A	393.19	393.19	0.00	-	-	-	-	-
A-B	246.62	246.62	0.00	-	-	-	-	-
A-C	544.80	544.80	0.00	-	-	-	-	-

Main results: (17:30-17:45)

Stream	Total Demand (PCU/hr)	Entry Flow (PCU/hr)	Pedestrian Demand (Ped/hr)	Capacity (PCU/hr)	RFC	End Queue (PCU)	Delay (s)	LOS
B-C	55.22	55.41	0.00	491.39	0.112	0.13	8.260	A
B-A	125.43	126.75	0.00	380.19	0.330	0.50	14.278	B
C-AB	86.41	86.81	0.00	507.17	0.170	0.23	8.576	A
C-A	335.10	335.10	0.00	-	-	-	-	-
A-B	206.53	206.53	0.00	-	-	-	-	-
A-C	456.24	456.24	0.00	-	-	-	-	-

Existing Layout - 2026 Base plus Committed, AM

Data Errors and Warnings

No errors or warnings

Analysis Set Details

Name	Description	Locked	Network Flow Scaling Factor (%)	Reason For Scaling Factors
Existing Layout			100.000	

Demand Set Details

Name	Scenario Name	Time Period Name	Description	Traffic Profile Type	Model Start Time (HH:mm)	Model Finish Time (HH:mm)	Model Time Period Length (min)	Time Segment Length (min)	Single Time Segment Only	Locked
2026 Base plus Committed, AM	2026 Base plus Committed	AM		ONE HOUR	07:45	09:15	90	15		

Junction Network

Junctions

Name	Junction Type	Major Road Direction	Arm Order	Junction Delay (s)	Junction LOS
(untitled)	T-Junction	Two-way	A,B,C	63.86	F

Junction Network Options

Driving Side	Lighting

Left	Normal/unknown

Arms

Arms

Arm	Name	Description	Arm Type
A	B5425 Llay New Road (s)		Major
B	Rhosrobin Road		Minor
C	B5425 Llay New Road (n)		Major

Major Arm Geometry

Arm	Width of carriageway (m)	Has kerbed central reserve	Width of kerbed central reserve (m)	Has right turn bay	Width For Right Turn (m)	Visibility For Right Turn (m)	Blocks?	Blocking Queue (PCU)
C	7.40		0.00		2.20	70.00	✓	1.00

Geometries for Arm C are measured opposite Arm B. Geometries for Arm A (if relevant) are measured opposite Arm D.

Minor Arm Geometry

Arm	Minor Arm Type	Lane Width (m)	Lane Width (Left) (m)	Lane Width (Right) (m)	Width at give-way (m)	Width at 5m (m)	Width at 10m (m)	Width at 15m (m)	Width at 20m (m)	Estimate Flare Length	Flare Length (PCU)	Visibility To Left (m)	Visibility To Right (m)
B	One lane plus flare				10.00	10.00	7.00	5.30	4.60	✓	3.00	70	70

Pedestrian Crossings

Arm	Crossing Type
A	None
B	None
C	None

Slope / Intercept / Capacity

Priority Intersection Slopes and Intercepts

Junction	Stream	Intercept (PCU/hr)	Slope for A-B	Slope for A-C	Slope for C-A	Slope for C-B
1	B-A	608.413	0.104	0.263	0.165	0.376
1	B-C	668.936	0.096	0.243	-	-
1	C-B	614.501	0.224	0.224	-	-

The slopes and intercepts shown above do NOT include any corrections or adjustments.
Streams may be combined, in which case capacity will be adjusted.
Values are shown for the first time segment only; they may differ for subsequent time segments.

Traffic Flows

Demand Set Data Options

Default Vehicle Mix	Vehicle Mix Varies Over Time	Vehicle Mix Varies Over Turn	Vehicle Mix Varies Over Entry	Vehicle Mix Source	PCU Factor for a HV (PCU)	Default Turning Proportions	Estimate from entry/exit counts	Turning Proportions Vary Over Time	Turning Proportions Vary Over Turn	Turning Proportions Vary Over Entry
		✓	✓	HV Percentages	2.00				✓	✓

Entry Flows

General Flows Data

Arm	Profile Type	Use Turning Counts	Average Demand Flow (PCU/hr)	Flow Scaling Factor (%)
A	ONE HOUR	✓	599.26	100.000
B	ONE HOUR	✓	334.12	100.000
C	ONE HOUR	✓	874.19	100.000

Turning Proportions

Turning Counts or Proportions (PCU/hr) - Junction 1 (for whole period)

		To		
		A	B	C
From	A	0.000	171.052	428.210
	B	233.887	0.000	100.229
	C	804.724	69.469	0.000

Turning Proportions (PCU) - Junction 1 (for whole period)

		To		
		A	B	C
From	A	0.00	0.29	0.71
	B	0.70	0.00	0.30
	C	0.92	0.08	0.00

Vehicle Mix

Average PCU Per Vehicle - Junction 1 (for whole period)

		To		
		A	B	C
From	A	1.000	1.000	1.000
	B	1.000	1.000	1.000
	C	1.000	1.000	1.000

Heavy Vehicle Percentages - Junction 1 (for whole period)

		To		
		A	B	C
From	A	0.000	0.000	0.000
	B	0.000	0.000	0.000
	C	0.000	0.000	0.000

Results

Results Summary for whole modelled period

Stream	Max RFC	Max Delay (s)	Max Queue (PCU)	Max LOS
B-C	0.64	54.31	1.58	F
B-A	0.89	88.25	5.82	F
C-AB	0.18	7.73	0.25	A
C-A	-	-	-	-
A-B	-	-	-	-
A-C	-	-	-	-

Main Results for each time segment

Main results: (07:45-08:00)

Stream	Total Demand (PCU/hr)	Entry Flow (PCU/hr)	Pedestrian Demand (Ped/hr)	Capacity (PCU/hr)	RFC	End Queue (PCU)	Delay (s)	LOS
B-C	75.46	74.76	0.00	506.14	0.149	0.17	8.332	A
B-A	176.08	172.90	0.00	390.25	0.451	0.80	16.339	C
C-AB	58.58	58.08	0.00	556.25	0.105	0.13	7.221	A
C-A	599.56	599.56	0.00	-	-	-	-	-
A-B	128.78	128.78	0.00	-	-	-	-	-
A-C	322.38	322.38	0.00	-	-	-	-	-

Main results: (08:00-08:15)

Stream	Total Demand (PCU/hr)	Entry Flow (PCU/hr)	Pedestrian Demand (Ped/hr)	Capacity (PCU/hr)	RFC	End Queue (PCU)	Delay (s)	LOS
B-C	90.10	89.79	0.00	444.88	0.203	0.25	10.128	B
B-A	210.26	207.71	0.00	347.75	0.605	1.43	25.238	D
C-AB	74.01	73.84	0.00	557.19	0.133	0.17	7.446	A
C-A	711.87	711.87	0.00	-	-	-	-	-
A-B	153.77	153.77	0.00	-	-	-	-	-
A-C	384.95	384.95	0.00	-	-	-	-	-

Main results: (08:15-08:30)

Stream	Total Demand (PCU/hr)	Entry Flow (PCU/hr)	Pedestrian Demand (Ped/hr)	Capacity (PCU/hr)	RFC	End Queue (PCU)	Delay (s)	LOS
B-C	110.35	107.80	0.00	227.08	0.486	0.89	29.593	D
B-A	257.51	243.79	0.00	288.44	0.893	4.86	66.532	F
C-AB	100.26	99.93	0.00	566.43	0.177	0.25	7.719	A
C-A	862.25	862.25	0.00	-	-	-	-	-
A-B	188.33	188.33	0.00	-	-	-	-	-
A-C	471.47	471.47	0.00	-	-	-	-	-

Main results: (08:30-08:45)

Stream	Total Demand (PCU/hr)	Entry Flow (PCU/hr)	Pedestrian Demand (Ped/hr)	Capacity (PCU/hr)	RFC	End Queue (PCU)	Delay (s)	LOS
B-C	110.35	107.60	0.00	171.10	0.645	1.58	54.311	F
B-A	257.51	253.69	0.00	288.61	0.892	5.82	88.253	F
C-AB	100.26	100.25	0.00	566.43	0.177	0.25	7.726	A
C-A	862.25	862.25	0.00	-	-	-	-	-
A-B	188.33	188.33	0.00	-	-	-	-	-
A-C	471.47	471.47	0.00	-	-	-	-	-

Main results: (08:45-09:00)

Stream	Total Demand (PCU/hr)	Entry Flow (PCU/hr)	Pedestrian Demand (Ped/hr)	Capacity (PCU/hr)	RFC	End Queue (PCU)	Delay (s)	LOS
B-C	90.10	95.31	0.00	420.31	0.214	0.28	11.246	B
B-A	210.26	226.98	0.00	348.14	0.604	1.64	33.058	D
C-AB	74.01	74.33	0.00	557.19	0.133	0.17	7.464	A
C-A	711.87	711.87	0.00	-	-	-	-	-
A-B	153.77	153.77	0.00	-	-	-	-	-
A-C	384.95	384.95	0.00	-	-	-	-	-

Main results: (09:00-09:15)

Stream	Total Demand (PCU/hr)	Entry Flow (PCU/hr)	Pedestrian Demand (Ped/hr)	Capacity (PCU/hr)	RFC	End Queue (PCU)	Delay (s)	LOS
B-C	75.46	75.85	0.00	501.66	0.150	0.18	8.463	A
B-A	176.08	179.24	0.00	390.54	0.451	0.85	17.280	C
C-AB	58.58	58.76	0.00	556.25	0.105	0.13	7.242	A
C-A	599.56	599.56	0.00	-	-	-	-	-
A-B	128.78	128.78	0.00	-	-	-	-	-
A-C	322.38	322.38	0.00	-	-	-	-	-

Existing Layout - 2026 Base plus Committed, PM

Data Errors and Warnings

No errors or warnings

Analysis Set Details

Name	Description	Locked	Network Flow Scaling Factor (%)	Reason For Scaling Factors
Existing Layout			100.000	

Demand Set Details

Name	Scenario Name	Time Period Name	Description	Traffic Profile Type	Model Start Time (HH:mm)	Model Finish Time (HH:mm)	Model Time Period Length (min)	Time Segment Length (min)	Single Time Segment Only	Locked
2026 Base plus Committed, PM	2026 Base plus Committed	PM		ONE HOUR	16:15	17:45	90	15		

Junction Network

Junctions

Name	Junction Type	Major Road Direction	Arm Order	Junction Delay (s)	Junction LOS
(untitled)	T-Junction	Two-way	A,B,C	71.14	F

Junction Network Options

Driving Side	Lighting
Left	Normal/unknown

Arms

Arms

Arm	Name	Description	Arm Type
A	B5425 Llay New Road (s)		Major
B	Rhosrobin Road		Minor
C	B5425 Llay New Road (n)		Major

Major Arm Geometry

Arm	Width of carriageway (m)	Has kerbed central reserve	Width of kerbed central reserve (m)	Has right turn bay	Width For Right Turn (m)	Visibility For Right Turn (m)	Blocks?	Blocking Queue (PCU)
C	7.40		0.00		2.20	70.00	✓	1.00

Geometries for Arm C are measured opposite Arm B. Geometries for Arm A (if relevant) are measured opposite Arm D.

Minor Arm Geometry

Arm	Minor Arm Type	Lane Width (m)	Lane Width (Left) (m)	Lane Width (Right) (m)	Width at give-way (m)	Width at 5m (m)	Width at 10m (m)	Width at 15m (m)	Width at 20m (m)	Estimate Flare Length	Flare Length (PCU)	Visibility To Left (m)	Visibility To Right (m)
B	One lane plus flare				10.00	10.00	7.00	5.30	4.60	✓	3.00	70	70

Pedestrian Crossings

Arm	Crossing Type
A	None
B	None
C	None

Slope / Intercept / Capacity

Priority Intersection Slopes and Intercepts

Junction	Stream	Intercept (PCU/hr)	Slope for A-B	Slope for A-C	Slope for C-A	Slope for C-B
1	B-A	609.465	0.104	0.263	0.166	0.376
1	B-C	667.623	0.096	0.243	-	-
1	C-B	614.501	0.224	0.224	-	-

The slopes and intercepts shown above do NOT include any corrections or adjustments.
Streams may be combined, in which case capacity will be adjusted.
Values are shown for the first time segment only; they may differ for subsequent time segments.

Traffic Flows

Demand Set Data Options

Default Vehicle Mix	Vehicle Mix Varies Over Time	Vehicle Mix Varies Over Turn	Vehicle Mix Varies Over Entry	Vehicle Mix Source	PCU Factor for a HV (PCU)	Default Turning Proportions	Estimate from entry/exit counts	Turning Proportions Vary Over Time	Turning Proportions Vary Over Turn	Turning Proportions Vary Over Entry
		✓	✓	HV Percentages	2.00				✓	✓

Entry Flows

General Flows Data

Arm	Profile Type	Use Turning Counts	Average Demand Flow (PCU/hr)	Flow Scaling Factor (%)
A	ONE HOUR	✓	994.34	100.000
B	ONE HOUR	✓	263.96	100.000
C	ONE HOUR	✓	650.88	100.000

Turning Proportions

Turning Counts or Proportions (PCU/hr) - Junction 1 (for whole period)

		To		
		A	B	C
From	A	0.000	297.500	696.841
	B	186.312	0.000	77.650
	C	542.581	108.295	0.000

Turning Proportions (PCU) - Junction 1 (for whole period)

		To		
		A	B	C
From	A	0.00	0.30	0.70
	B	0.71	0.00	0.29
	C	0.83	0.17	0.00

Vehicle Mix

Average PCU Per Vehicle - Junction 1 (for whole period)

		To		
		A	B	C
From	A	1.000	1.000	1.000
	B	1.000	1.000	1.000
	C	1.000	1.000	1.000

Heavy Vehicle Percentages - Junction 1 (for whole period)

		To		
		A	B	C
From	A	0.000	0.000	0.000
	B	0.000	0.000	0.000
	C	0.000	0.000	0.000

Results

Results Summary for whole modelled period

Stream	Max RFC	Max Delay (s)	Max Queue (PCU)	Max LOS
B-C	0.75	94.20	2.12	F
B-A	0.90	108.48	5.68	F
C-AB	0.36	11.06	0.71	B
C-A	-	-	-	-
A-B	-	-	-	-
A-C	-	-	-	-

Main Results for each time segment

Main results: (16:15-16:30)

Stream	Total Demand (PCU/hr)	Entry Flow (PCU/hr)	Pedestrian Demand (Ped/hr)	Capacity (PCU/hr)	RFC	End Queue (PCU)	Delay (s)	LOS
B-C	58.46	57.89	0.00	463.16	0.126	0.14	8.870	A
B-A	140.27	137.67	0.00	349.46	0.401	0.65	16.803	C
C-AB	95.11	94.09	0.00	500.88	0.190	0.26	8.833	A
C-A	394.90	394.90	0.00	-	-	-	-	-
A-B	223.97	223.97	0.00	-	-	-	-	-
A-C	524.62	524.62	0.00	-	-	-	-	-

Main results: (16:30-16:45)

Stream	Total Demand	Entry Flow	Pedestrian Demand	Capacity	RFC	End Queue	Delay	LOS

	(PCU/hr)	(PCU/hr)	(Ped/hr)	(PCU/hr)		(PCU)	(s)	
B-C	69.81	69.55	0.00	401.61	0.174	0.21	10.824	B
B-A	167.49	165.29	0.00	298.71	0.561	1.20	26.542	D
C-AB	124.25	123.74	0.00	497.51	0.250	0.38	9.629	A
C-A	460.88	460.88	0.00	-	-	-	-	-
A-B	267.45	267.45	0.00	-	-	-	-	-
A-C	626.45	626.45	0.00	-	-	-	-	-

Main results: (16:45-17:00)

Stream	Total Demand (PCU/hr)	Entry Flow (PCU/hr)	Pedestrian Demand (Ped/hr)	Capacity (PCU/hr)	RFC	End Queue (PCU)	Delay (s)	LOS
B-C	85.49	82.94	0.00	179.28	0.477	0.85	36.489	E
B-A	205.13	191.46	0.00	228.33	0.898	4.62	78.888	F
C-AB	181.37	180.13	0.00	508.01	0.357	0.69	10.977	B
C-A	535.26	535.26	0.00	-	-	-	-	-
A-B	327.55	327.55	0.00	-	-	-	-	-
A-C	767.24	767.24	0.00	-	-	-	-	-

Main results: (17:00-17:15)

Stream	Total Demand (PCU/hr)	Entry Flow (PCU/hr)	Pedestrian Demand (Ped/hr)	Capacity (PCU/hr)	RFC	End Queue (PCU)	Delay (s)	LOS
B-C	85.49	80.40	0.00	114.51	0.747	2.12	94.198	F
B-A	205.13	200.89	0.00	228.25	0.899	5.68	108.477	F
C-AB	181.37	181.30	0.00	508.01	0.357	0.71	11.058	B
C-A	535.26	535.26	0.00	-	-	-	-	-
A-B	327.55	327.55	0.00	-	-	-	-	-
A-C	767.24	767.24	0.00	-	-	-	-	-

Main results: (17:15-17:30)

Stream	Total Demand (PCU/hr)	Entry Flow (PCU/hr)	Pedestrian Demand (Ped/hr)	Capacity (PCU/hr)	RFC	End Queue (PCU)	Delay (s)	LOS
B-C	69.81	77.37	0.00	380.03	0.184	0.23	12.179	B
B-A	167.49	184.71	0.00	298.21	0.562	1.37	35.672	E
C-AB	124.25	125.46	0.00	497.51	0.250	0.40	9.719	A
C-A	460.88	460.88	0.00	-	-	-	-	-
A-B	267.45	267.45	0.00	-	-	-	-	-
A-C	626.45	626.45	0.00	-	-	-	-	-

Main results: (17:30-17:45)

Stream	Total Demand (PCU/hr)	Entry Flow (PCU/hr)	Pedestrian Demand (Ped/hr)	Capacity (PCU/hr)	RFC	End Queue (PCU)	Delay (s)	LOS
B-C	58.46	58.78	0.00	459.63	0.127	0.15	8.987	A
B-A	140.27	143.00	0.00	349.42	0.401	0.69	17.658	C
C-AB	95.11	95.66	0.00	500.88	0.190	0.26	8.900	A
C-A	394.90	394.90	0.00	-	-	-	-	-
A-B	223.97	223.97	0.00	-	-	-	-	-
A-C	524.62	524.62	0.00	-	-	-	-	-

APPENDIX K

B5425 LLAY NEW ROAD/ RHOSROBIN ROAD/ SITE ACCESS – ARCADY MODEL OUTPUTS

Junctions 8

ARCADY 8 - Roundabout Module

Version: 8.0.2.316 [14 Feb 2013]
© Copyright TRL Limited, 2021

For sales and distribution information, program advice and maintenance, contact TRL:
Tel: +44 (0)1344 770758 E-mail: software@trl.co.uk Web: http://www.trlsoftware.co.uk

The users of this computer program for the solution of an engineering problem are in no way relieved of their responsibility for the correctness of the solution

Filename: Llay Rd_Rhosrobin.arc8
Path: D:\Cameron Rose Associates\Projects\528_Proposed Residential Development New Llay Road, Rhosrobin\ANALYSIS\ARCADY\Llay Rd_Rhosrobin\92 Units
Report generation date: 13/09/2021 12:52:45

File summary

File Description

Title	B5425 Llay New Road/ Rhosrobin
Location	Rhosrobin
Site Number	
Date	12/08/2019
Version	
Status	
Identifier	
Client	
Jobnumber	528
Enumerator	Cameron Rose Associates
Description	

Analysis Options

Vehicle Length (m)	Do Queue Variations	Calculate Residual Capacity	Residual Capacity Criteria Type	RFC Threshold	Average Delay Threshold (s)	Queue Threshold (PCU)
5.75			N/A	0.85	36.00	20.00

Units

Distance Units	Speed Units	Traffic Units Input	Traffic Units Results	Flow Units	Average Delay Units	Total Delay Units	Rate Of Delay Units
m	kph	PCU	PCU	perHour	s	-Min	perMin

Future Layout - 2026 Base plus Committed plus Development, AM

Data Errors and Warnings

No errors or warnings

Analysis Set Details

Name	Description	Locked	Network Flow Scaling Factor (%)	Reason For Scaling Factors
Future Layout	Planning Application: 2014/0480 - Proposed Residential Development off Llay New Road		100.000	

Demand Set Details

Name	Scenario Name	Time Period Name	Description	Traffic Profile Type	Model Start Time (HH:mm)	Model Finish Time (HH:mm)	Model Time Period Length (min)	Time Segment Length (min)	Single Time Segment Only	Locked
2026 Base plus Committed plus Development, AM	2026 Base plus Committed plus Development	AM		ONE HOUR	07:45	09:15	90	15		

Junction Network

Junctions

Name	Junction Type	Arm Order	Grade Separated	Large Roundabout	Junction Delay (s)	Junction LOS
(untitled)	Roundabout	A,B,C,D			19.26	C

Junction Network Options

Driving Side	Lighting
Left	Normal/unknown

Arms

Arms

Arm	Name	Description
A	B5425 Llay New Road (s)	
B	Rhosrobin Road	
C	B5425 Llay New Road (n)	
D	Site Access	

Roundabout Geometry

Arm	V - Approach road half-width (m)	E - Entry width (m)	I' - Effective flare length (m)	R - Entry radius (m)	D - Inscribed circle diameter (m)	PHI - Conflict (entry) angle (deg)	Exit Only
A	3.22	4.80	8.30	23.00	28.00	18.50	
B	3.64	4.13	11.00	23.70	28.00	24.00	
C	3.19	4.10	15.45	15.70	28.00	22.00	
D	2.75	4.31	12.84	20.00	28.00	19.50	

Geometries for Arm C are measured opposite Arm B. Geometries for Arm A (if relevant) are measured opposite Arm D.

Pedestrian Crossings

Arm	Crossing Type
A	None
B	None
C	None
D	None

Slope / Intercept / Capacity

Roundabout Slope and Intercept used in model

Arm	Enter slope and intercept directly	Entered slope	Entered intercept (PCU/hr)	Final Slope	Final Intercept (PCU/hr)
A		(calculated)	(calculated)	0.598	1331.051
B		(calculated)	(calculated)	0.580	1267.542
C		(calculated)	(calculated)	0.565	1214.960
D		(calculated)	(calculated)	0.572	1215.573

The slope and intercept shown above include any corrections and adjustments.

Traffic Flows

Demand Set Data Options

Default Vehicle Mix	Vehicle Mix Varies Over Time	Vehicle Mix Varies Over Turn	Vehicle Mix Varies Over Entry	Vehicle Mix Source	PCU Factor for a HV (PCU)	Default Turning Proportions	Estimate from entry/exit counts	Turning Proportions Vary Over Time	Turning Proportions Vary Over Turn	Turning Proportions Vary Over Entry
		✓	✓	HV Percentages	2.00				✓	✓

Entry Flows

General Flows Data

Arm	Profile Type	Use Turning Counts	Average Demand Flow (PCU/hr)	Flow Scaling Factor (%)
A	ONE HOUR	✓	606.00	100.000
B	ONE HOUR	✓	336.00	100.000
C	ONE HOUR	✓	881.00	100.000
D	ONE HOUR	✓	50.00	100.000

Turning Proportions

Turning Counts or Proportions (PCU/hr) - Junction 1 (for whole period)

		To			
		A	B	C	D
From	A	0.000	171.000	428.000	7.000
	B	234.000	0.000	100.000	2.000
	C	805.000	69.000	0.000	7.000
	D	22.000	5.000	23.000	0.000

Turning Proportions (PCU) - Junction 1 (for whole period)

		To			
		A	B	C	D
From	A	0.00	0.28	0.71	0.01
	B	0.70	0.00	0.30	0.01
	C	0.91	0.08	0.00	0.01
	D	0.44	0.10	0.46	0.00

Vehicle Mix

Average PCU Per Vehicle - Junction 1 (for whole period)

		To			
		A	B	C	D
From	A	1.000	1.000	1.000	1.000
	B	1.000	1.000	1.000	1.000
	C	1.000	1.000	1.000	1.000
	D	1.000	1.000	1.000	1.000

Heavy Vehicle Percentages - Junction 1 (for whole period)

		To			
From		A	B	C	D
	A	0.000	0.000	0.000	0.000
	B	0.000	0.000	0.000	0.000
	C	0.000	0.000	0.000	0.000
	D	0.000	0.000	0.000	0.000

Results

Results Summary for whole modelled period

Arm	Max RFC	Max Delay (s)	Max Queue (PCU)	Max LOS
A	0.53	6.00	1.10	A
B	0.38	5.95	0.61	A
C	0.91	34.12	8.60	D
D	0.11	7.74	0.12	A

Main Results for each time segment

Main results: (07:45-08:00)

Arm	Total Demand (PCU/hr)	Entry Flow (PCU/hr)	Circulating Flow (PCU/hr)	Pedestrian Demand (Ped/hr)	Capacity (PCU/hr)	RFC	End Queue (PCU)	Delay (s)	LOS
A	456.23	454.05	72.45	0.00	1287.69	0.354	0.54	4.307	A
B	252.96	251.73	343.14	0.00	1068.57	0.237	0.31	4.401	A
C	663.26	657.48	182.05	0.00	1112.16	0.596	1.45	7.822	A
D	37.64	37.43	827.56	0.00	742.49	0.051	0.05	5.105	A

Main results: (08:00-08:15)

Arm	Total Demand (PCU/hr)	Entry Flow (PCU/hr)	Circulating Flow (PCU/hr)	Pedestrian Demand (Ped/hr)	Capacity (PCU/hr)	RFC	End Queue (PCU)	Delay (s)	LOS
A	544.78	544.02	86.82	0.00	1279.10	0.426	0.74	4.892	A
B	302.06	301.64	411.15	0.00	1029.14	0.294	0.41	4.946	A
C	792.00	787.67	218.15	0.00	1091.78	0.725	2.53	11.668	B
D	44.95	44.87	991.49	0.00	648.78	0.069	0.07	5.961	A

Main results: (08:15-08:30)

Arm	Total Demand (PCU/hr)	Entry Flow (PCU/hr)	Circulating Flow (PCU/hr)	Pedestrian Demand (Ped/hr)	Capacity (PCU/hr)	RFC	End Queue (PCU)	Delay (s)	LOS
A	667.22	665.78	105.11	0.00	1268.15	0.526	1.10	5.961	A
B	369.94	369.17	503.16	0.00	975.79	0.379	0.60	5.927	A
C	970.00	949.59	266.99	0.00	1064.20	0.911	7.63	27.486	D
D	55.05	54.89	1199.15	0.00	530.07	0.104	0.11	7.574	A

Main results: (08:30-08:45)

Arm	Total Demand (PCU/hr)	Entry Flow (PCU/hr)	Circulating Flow (PCU/hr)	Pedestrian Demand (Ped/hr)	Capacity (PCU/hr)	RFC	End Queue (PCU)	Delay (s)	LOS
A	667.22	667.18	106.49	0.00	1267.33	0.526	1.10	5.998	A
B	369.94	369.93	504.24	0.00	975.16	0.379	0.61	5.947	A
C	970.00	966.10	267.54	0.00	1063.89	0.912	8.60	34.120	D
D	55.05	55.04	1216.06	0.00	520.40	0.106	0.12	7.735	A

Main results: (08:45-09:00)

Arm	Total Demand	Entry Flow	Circulating Flow	Pedestrian Demand	Capacity	RFC	End Queue	Delay	LOS

	(PCU/hr)	(PCU/hr)	(PCU/hr)	(Ped/hr)	(PCU/hr)		(PCU)	(s)	
A	544.78	546.20	89.12	0.00	1277.72	0.426	0.75	4.932	A
B	302.06	302.81	412.82	0.00	1028.17	0.294	0.42	4.969	A
C	792.00	815.32	219.00	0.00	1091.30	0.726	2.77	14.037	B
D	44.95	45.11	1019.73	0.00	632.63	0.071	0.08	6.130	A

Main results: (09:00-09:15)

Arm	Total Demand (PCU/hr)	Entry Flow (PCU/hr)	Circulating Flow (PCU/hr)	Pedestrian Demand (Ped/hr)	Capacity (PCU/hr)	RFC	End Queue (PCU)	Delay (s)	LOS
A	456.23	457.02	73.47	0.00	1287.08	0.354	0.55	4.340	A
B	252.96	253.38	345.41	0.00	1067.26	0.237	0.31	4.427	A
C	663.26	668.31	183.25	0.00	1111.48	0.597	1.51	8.214	A
D	37.64	37.73	839.47	0.00	735.68	0.051	0.05	5.160	A

Future Layout - 2026 Base plus Committed plus Development, PM

Data Errors and Warnings

No errors or warnings

Analysis Set Details

Name	Description	Locked	Network Flow Scaling Factor (%)	Reason For Scaling Factors
Future Layout	Planning Application: 2014/0480 - Proposed Residential Development off Llay New Road		100.000	

Demand Set Details

Name	Scenario Name	Time Period Name	Description	Traffic Profile Type	Model Start Time (HH:mm)	Model Finish Time (HH:mm)	Model Time Period Length (min)	Time Segment Length (min)	Single Time Segment Only	Locked
2026 Base plus Committed plus Development, PM	2026 Base plus Committed plus Development	PM		ONE HOUR	16:15	17:45	90	15		

Junction Network

Junctions

Name	Junction Type	Arm Order	Grade Separated	Large Roundabout	Junction Delay (s)	Junction LOS
(untitled)	Roundabout	A,B,C,D			16.63	C

Junction Network Options

Driving Side	Lighting
Left	Normal/unknown

Arms

Arms

Arm	Name	Description
A	B5425 Llay New Road (s)	
B	Rhosrobin Road	
C	B5425 Llay New Road (n)	
D	Site Access	

Roundabout Geometry

Arm	V - Approach road half-width (m)	E - Entry width (m)	I' - Effective flare length (m)	R - Entry radius (m)	D - Inscribed circle diameter (m)	PHI - Conflict (entry) angle (deg)	Exit Only
A	3.22	4.80	8.30	23.00	28.00	18.50	
B	3.64	4.13	11.00	23.70	28.00	24.00	
C	3.19	4.10	15.45	15.70	28.00	22.00	
D	2.75	4.31	12.84	20.00	28.00	19.50	

Geometries for Arm C are measured opposite Arm B. Geometries for Arm A (if relevant) are measured opposite Arm D.

Pedestrian Crossings

Arm	Crossing Type
A	None
B	None
C	None
D	None

Slope / Intercept / Capacity

Roundabout Slope and Intercept used in model

Arm	Enter slope and intercept directly	Entered slope	Entered intercept (PCU/hr)	Final Slope	Final Intercept (PCU/hr)
A		(calculated)	(calculated)	0.598	1331.051
B		(calculated)	(calculated)	0.580	1267.542
C		(calculated)	(calculated)	0.565	1214.960
D		(calculated)	(calculated)	0.572	1215.573

The slope and intercept shown above include any corrections and adjustments.

Traffic Flows

Demand Set Data Options

Default Vehicle Mix	Vehicle Mix Varies Over Time	Vehicle Mix Varies Over Turn	Vehicle Mix Varies Over Entry	Vehicle Mix Source	PCU Factor for a HV (PCU)	Default Turning Proportions	Estimate from entry/exit counts	Turning Proportions Vary Over Time	Turning Proportions Vary Over Turn	Turning Proportions Vary Over Entry
		✓	✓	HV Percentages	2.00				✓	✓

Entry Flows

General Flows Data

Arm	Profile Type	Use Turning Counts	Average Demand Flow (PCU/hr)	Flow Scaling Factor (%)
A	ONE HOUR	✓	1006.00	100.000
B	ONE HOUR	✓	271.00	100.000
C	ONE HOUR	✓	663.00	100.000
D	ONE HOUR	✓	19.00	100.000

Turning Proportions

Turning Counts or Proportions (PCU/hr) - Junction 1 (for whole period)

	To			
From	A	B	C	D

	A	0.000	298.000	697.000	11.000
	B	186.000	0.000	78.000	7.000
	C	543.000	108.000	0.000	12.000
	D	7.000	4.000	8.000	0.000

Turning Proportions (PCU) - Junction 1 (for whole period)

		To			
		A	B	C	D
From	A	0.00	0.30	0.69	0.01
	B	0.69	0.00	0.29	0.03
	C	0.82	0.16	0.00	0.02
	D	0.37	0.21	0.42	0.00

Vehicle Mix

Average PCU Per Vehicle - Junction 1 (for whole period)

		To			
		A	B	C	D
From	A	1.000	1.000	1.000	1.000
	B	1.000	1.000	1.000	1.000
	C	1.000	1.000	1.000	1.000
	D	1.000	1.000	1.000	1.000

Heavy Vehicle Percentages - Junction 1 (for whole period)

		To			
		A	B	C	D
From	A	0.000	0.000	0.000	0.000
	B	0.000	0.000	0.000	0.000
	C	0.000	0.000	0.000	0.000
	D	0.000	0.000	0.000	0.000

Results

Results Summary for whole modelled period

Arm	Max RFC	Max Delay (s)	Max Queue (PCU)	Max LOS
A	0.88	23.78	6.92	C
B	0.37	7.02	0.58	A
C	0.67	10.04	2.00	B
D	0.03	5.39	0.03	A

Main Results for each time segment

Main results: (16:15-16:30)

Arm	Total Demand (PCU/hr)	Entry Flow (PCU/hr)	Circulating Flow (PCU/hr)	Pedestrian Demand (Ped/hr)	Capacity (PCU/hr)	RFC	End Queue (PCU)	Delay (s)	LOS
A	757.37	751.65	89.79	0.00	1277.32	0.593	1.43	6.776	A
B	204.02	202.95	534.99	0.00	957.33	0.213	0.27	4.765	A
C	499.14	496.01	152.75	0.00	1128.70	0.442	0.78	5.664	A
D	14.30	14.24	626.32	0.00	857.53	0.017	0.02	4.268	A

Main results: (16:30-16:45)

Arm	Total Demand (PCU/hr)	Entry Flow (PCU/hr)	Circulating Flow (PCU/hr)	Pedestrian Demand (Ped/hr)	Capacity (PCU/hr)	RFC	End Queue (PCU)	Delay (s)	LOS
A	904.37	900.46	107.63	0.00	1266.64	0.714	2.41	9.725	A
B	243.62	243.22	640.90	0.00	895.92	0.272	0.37	5.511	A
C	596.02	594.61	183.06	0.00	1111.59	0.536	1.14	6.943	A
D	17.08	17.06	750.78	0.00	786.38	0.022	0.02	4.679	A

Main results: (16:45-17:00)

Arm	Total Demand (PCU/hr)	Entry Flow (PCU/hr)	Circulating Flow (PCU/hr)	Pedestrian Demand (Ped/hr)	Capacity (PCU/hr)	RFC	End Queue (PCU)	Delay (s)	LOS
A	1107.63	1091.66	131.56	0.00	1252.33	0.884	6.40	20.599	C
B	298.38	297.58	777.08	0.00	816.96	0.365	0.57	6.922	A
C	729.98	726.64	223.87	0.00	1088.55	0.671	1.97	9.855	A
D	20.92	20.88	917.73	0.00	690.94	0.030	0.03	5.372	A

Main results: (17:00-17:15)

Arm	Total Demand (PCU/hr)	Entry Flow (PCU/hr)	Circulating Flow (PCU/hr)	Pedestrian Demand (Ped/hr)	Capacity (PCU/hr)	RFC	End Queue (PCU)	Delay (s)	LOS
A	1107.63	1105.53	132.10	0.00	1252.00	0.885	6.92	23.785	C
B	298.38	298.34	786.86	0.00	811.29	0.368	0.58	7.017	A
C	729.98	729.85	224.56	0.00	1088.16	0.671	2.00	10.036	B
D	20.92	20.92	921.41	0.00	688.84	0.030	0.03	5.389	A

Main results: (17:15-17:30)

Arm	Total Demand (PCU/hr)	Entry Flow (PCU/hr)	Circulating Flow (PCU/hr)	Pedestrian Demand (Ped/hr)	Capacity (PCU/hr)	RFC	End Queue (PCU)	Delay (s)	LOS
A	904.37	921.69	108.44	0.00	1266.16	0.714	2.59	10.936	B
B	243.62	244.40	655.87	0.00	887.24	0.275	0.38	5.608	A
C	596.02	599.34	184.14	0.00	1110.98	0.536	1.18	7.082	A
D	17.08	17.12	756.23	0.00	783.26	0.022	0.02	4.698	A

Main results: (17:30-17:45)

Arm	Total Demand (PCU/hr)	Entry Flow (PCU/hr)	Circulating Flow (PCU/hr)	Pedestrian Demand (Ped/hr)	Capacity (PCU/hr)	RFC	End Queue (PCU)	Delay (s)	LOS
A	757.37	761.81	90.60	0.00	1276.83	0.593	1.48	7.048	A
B	204.02	204.45	542.17	0.00	953.17	0.214	0.27	4.812	A
C	499.14	500.64	153.94	0.00	1128.04	0.442	0.80	5.751	A
D	14.30	14.33	631.90	0.00	854.34	0.017	0.02	4.285	A