FUTURESERV

DESIGN ENGINEER SUSTAIN

WWW.FUTURESERV.CO.UK

Northern Quarter Energy Statement

QA

Document ref: L5195/18.9/Reports

Document History

Issue	Issue 1 - Draft	Issue 2 - Draft		
Date	June 2018	June 2018		
Purpose	For Comment	For Comment		
Created by	John Sung	John Sung		
Signature	*J Sung*	*J Sung*		

Approvals

Name	**Mike Travis**	**Mike Travis**		
Title	Associate Director	Associate Director		
Signature	*M Travis*	*M Travis*		
Date of Issue	June 2018	June 2018		
Version	For Comment	For Comment		

Distribution

Document Issue	Name	Organisation	Role
Preliminary Issue	Tony Catherall	Day Architecture Design	Architect
	Dean Roberts	Day Architecture Design	Architect
	Matthew Quinton	Day Architecture Design	Architect
	Laurie Blower	Day Architecture Design	Architect
	David Ogden	Day Architecture Design	Architect
	Paul Foster	PRPM	Project Manager

FUTURESERV Ltd
19 Old Hall Street
Liverpool
L3 9JQ
0151 541 7106
www.futureserv.co.uk
enquiries@futureserv.co.uk

Contents

Section 1 – Executive Summary 4
Section 2 – Introduction 5
Section 3 – Development Proposals 6
Section 4 – Policy and Legislation 7
Section 5 – Energy Strategy 9
5.1 - Baseline Energy Assessment 9
5.2 - Passive Design Improvements 10
5.3 - Energy Efficiency Improvements 11
5.4 - Renewable Energy Improvements 12
5.5 - Energy Generation and Distribution Systems 19
5.6 - Energy Performance Calculations 21
Section 6 - Conclusions 24

Section 1 – Executive Summary

This Energy Statement addresses the planning requirements of Wrexham University as set out in Wrexham's university environmental sustainability strategy.

This Energy Statement has been prepared to illustrate the environmental aspects of the proposed development highlighting the Energy/Carbon emission profile and, assess the options available for reducing energy consumption and associated CO_2 emissions in accordance with Wrexham City Council's policies and guidelines.

All planning policies both national and local that apply to the proposed development have been reviewed together with the Building Regulations Approved document part L2A.

National and local policies require that an environmental assessment is carried out on all public projects. This project is targeting BREEAM 'Very Good ' rating under BREEAM New Construction 2014.

The baseline energy emissions have been developed, producing a Simplified Building Energy Model SBEM calculation for the building. Passive fabric measures across the building including improvements to the thermal performance and air tightness above Part L requirements of the Building Regulations have been incorporated.

Construction Element	Building Regulations Specification (2013)	Development Specification
Ground Floor	0.25 W/m^{2}k	0.18 W/m^{2}k
External Walls	0.35 W/m^{2}k	0.20 W/m^{2}k
Roof	0.25 W/m^{2}k	0.18W/m^{2}k
Windows	2.2 W/m^{2}k	1.5 W/m^{2}k
External Doors	2.2 W/m^{2}k	2.2 W/m^{2}k
Air Permeability	10m^3/h/m^2 @50Pa	5m^3/h/m^2 @50Pa

In addition to the Passive design measures, Active Building Services are to be designed to minimise direct energy consumption and CO_2 emissions, with particular emphasis on the following;

- Improved Boiler Efficiencies;
- Reduced Standing Losses from Pipes and Cylinders;
- Increased Hot Water Generating Efficiencies;
- Energy Efficient LED Lighting;
- Improved Lighting Controls;
- Heat Recovery Ventilation;
- Low Energy Motors in Pumps and Fans;
- Efficient Heat Recovery in other systems and,
- Enhanced electric panel heater controls

Renewable and Low Carbon technologies have been considered and of the available solutions, it is recommended that the proposed scheme implements a combined heat and power system.

The inclusion of Combined Heat and Power technology (CHP) is considered the most appropriate for this development and has been incorporated into the primary heat generation for the hot water systems. This will reduce the primary energy use requirement within the development, i.e. the Domestic Hot Water generation.

The Energy Model has been calculated to take account the selected renewable energy technologies proposed for this development.

The actual carbon emission rate of **34.00 kg/CO2/annum** led to a total carbon reduction of **8.9 kg/CO2/annum** from the baseline emissions of **42.90 kg/CO2/annum.**

Therefore, the CO_2 reduction due to utilising the energy hierarchy on this development has been calculated to be **20%** and therefore in line with Wrexham City Council Core Strategy Development Plan Document.

As detailed within the Core Strategy Plan the total energy demand of the development at this stage has also been calculated to be **6,916,740.83 kwh/annum.**

Section 2 – Introduction

Futureserv Ltd have been appointed to produce an Energy Statement to support the planning application for Wrexham Universities proposed Northern quarter development

The proposed site is to consist of 410 studio & 1 bed rooms at the Northern quarter campus on wrexham university

External architectural elevational treatment is not included within this outline application but a 3D massing model is included within this Design and Access Statement to indicate overall building form and maximum AOD heights. However, indicative design sketches are included of the intended architectural treatment as and when this accommodation is constructed.

The proposed material pallet is similar to the proposed pallet for Wrexham Student Village Phase 2 accommodation with brickwork and full height windows. Full detail of elevational design and materiality would be resolved as part of any future detailed planning application prior to construction.

Section 3 – Development Proposals

The proposed site is to consist of 197 private residential 1 & 2 bedrooms apartments at The Northern quarter at the Wrexham university campus.

The properties will provide high quality accommodation. The University is planning on growth in student numbers, many of whom will come from outside the local area and who will expect to be accommodated. A targeted proportion of new student accommodation is being developed as an essential part of the Strategy across the university campus.

This Energy Statement has been prepared to illustrate the environmental aspects of the proposed development highlighting the Energy/Carbon emission profile and, assess the options available for reducing energy consumption and associated CO_2 emissions in accordance with Wrexham City Council's policies and guidelines.

Futureserv Consulting Engineers have collaborated with the design team to provide a holistic solution for the building that will provide an efficient envelope and contain intelligent building services reducing the environmental impact of the development whilst providing comfortable living accommodation.

Section 4 – Policy and Legislation

There are a number of planning policies both national and local that apply to the proposed development.

The UK government has signed up to a legally binding agreement to reduce Carbon emissions by 34% based on 1990 levels before 2020 and by 80% before 2050, this responsibility is being discharged using the Climate Change Act 2008.

The National Planning Policy Framework (NPPF), offers specific guidance which highlights the UK's aspiration to support a transition to a Low Carbon future in a changing climate and in particular, to encourage the use of renewable resources such as Renewable Energy and states;

Planning authorities should ensure that development plans contribute to global sustainability by addressing the causes and effects of climate change through policies which reduce energy use and emissions, promote development of renewable energy resources, and take climate change impacts into account in the location and design of development.

Local Policies

The proposed development is located off Holt on the Wrexham , with the local policies adopted by Wrexham City Council outlined within Wrexham's Local Development Framework Core Strategy Development Plan, adopted in 2005, The policy states that Under the Council Priority "An Environmentally Responsible Place" Wrexham County Borough Council are committed to reducing carbon emissions by 50% by 2015/16 and 70% by 2020, against a 2005/06 baseline.

Within this document specific policies highlight carbon emissions reductions and the impacts of climate change. These are as follows;

Policy RE1: Development and Renewable Energy/Low Carbon Technology

Development proposals are required to maximise the potential for renewable energy.

The Council will encourage developers of the Key Strategic Sites and major sites (100 dwellings or more or development exceeding 1000m^2) to incorporate schemes which generate energy from renewable and low carbon technologies. This includes opportunities to minimise carbon emissions associated with the heating, cooling and power systems for new development.

An independent energy assessment investigating the financial viability and technical feasibility of incorporating such schemes will be required to support applications.

This policy out outlines need to introduce renewable technology on any future developments in the County of Wrexham.

Wrexham Borough Council is looking to utilise low carbon measures on any future developments as outlined below.

Wrexham Borough Council is looking to provide 10% of energy requirements for low carbon energy sources for all new build projects in the borough.

To reduce a bulidings carbon footprint, the below hierarchy is used to assist.

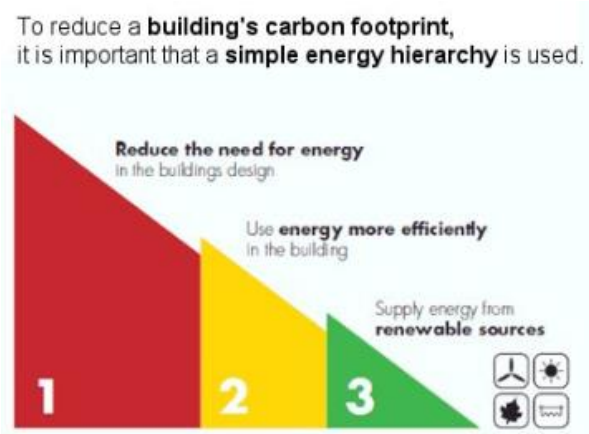

FUTURESERV
DESIGN ENGINEER SUSTAIN
WWW.FUTURESERV.CO.UK

Contributing to the Carbon Offset Fund

Once energy efficiency measures and renewable or low-carbon technology opportunities have been maximised, any remaining CO2 emissions can be offset through contributions to a carbon offset fund, which will be invested in off-site renewable energy and energy efficiency projects throughout the city.

BREEAM

Wrexham Borough council require the sustainability of the development assessed under BREEAM and to meet the standards set out in the table below;

All residential development achieves at least the following level of the Code for Sustainable Homes		All non-residential developments with a floor space of over 500 m^2 achieve at least the following BREEAM standards.
from adoption (2010)	**Level 3**	BREEAM **'very good'**
from 2012	**Level 4**	BREEAM **'excellent'**
from 2016	**Level 6**	BREEAM **'excellent'**

The development is stated to be code for sustainable homes level 3 or Breeam 'Very Good' standard.

Please note that current Wrexham planning guidelines state code for sustainable homes level 3, this is now obsolete, therefore the is looking to a Breeam ' Very Good' standard across the campus.

In this regard, areas of Government policy give rise to the following three national and regional targets:

- A national reduction in CO2 emissions by 34% in 2020 and by 80% in 2050, (from a 1990 baseline) to which buildings will need to make a proportionately higher contribution, as set out in the Climate Change Act 2008.
- A national increase in renewable energy capacity by 15% by 2020 as set out in the UK Renewable Energy Strategy, which will require an uplift in current levels.

Building Regulations Part L2A (2013)

The proposed development is being designed to comply with the Building regulations approved document Part L2A, 2013 edition. This approved document was effective on 6th April 2014.

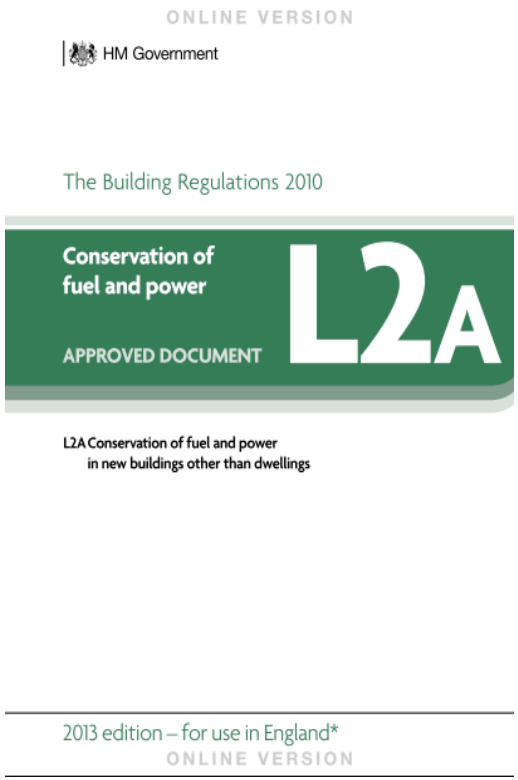
ONLINE VERSION

HM Government

The Building Regulations 2010

Conservation of fuel and power

APPROVED DOCUMENT

L2A

L2A Conservation of fuel and power in new buildings other than dwellings

2013 edition – for use in England*

ONLINE VERSION

The main changes in this approved document from the previous revision are that;

The notional building used to determine carbon dioxide and fabric energy efficiency targets is the same size and shape as the actual building, constructed to a concurrent specification. **The Part L 2013 specifications have been strengthened to deliver 9 per cent carbon dioxide savings relative to part L 2010.**

Section 5 – Energy Strategy

5.1 - Baseline Energy Assessment

Futureserv Ltd have conducted analysis for this stage of the development on the complete development to show compliance with the Building Regulations Part L2A:2013 therefore setting a reference baseline. This was carried out to understand the developments Carbon emissions without any Carbon Emission mitigation measures.

This baseline energy assessment has been developed, producing preliminary SBEM calculations for the entire building. The baseline model has been created to provide Target Emission rates (TER). The SBEM calculations then in turn produce a Building Emission rate (BER) which is equal to or lower than that of the TER.

SBEM is an Industry standard computed generated assessment for calculating the energy aspects of a building. The SBEM engine within the computer software assesses how energy efficient a building is based on energy use and CO2 emissions.

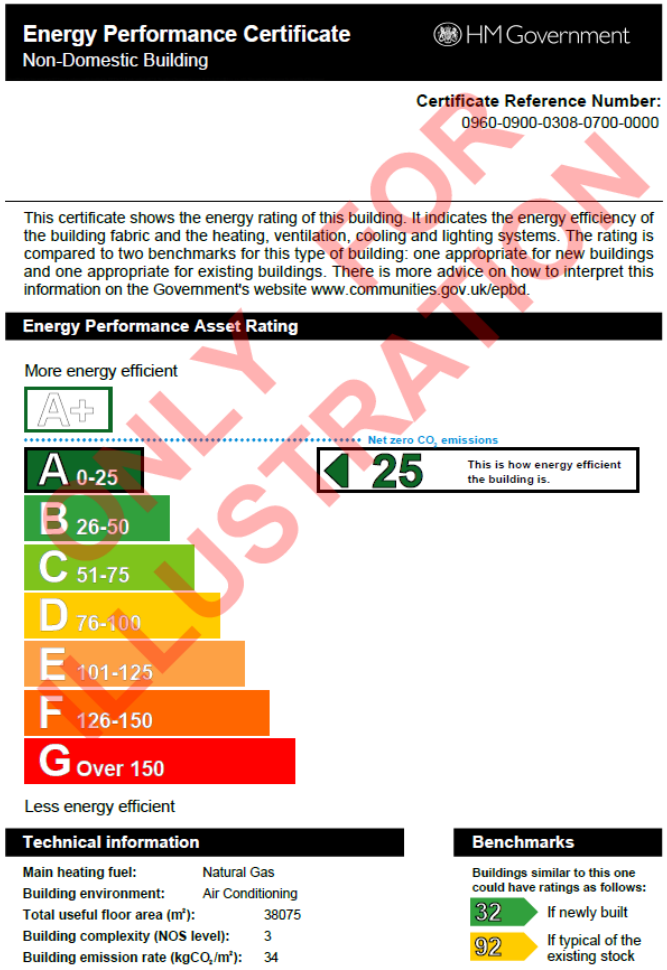

Energy Performance Certificate
Non-Domestic Building

HM Government

Certificate Reference Number:
0960-0900-0308-0700-0000

This certificate shows the energy rating of this building. It indicates the energy efficiency of the building fabric and the heating, ventilation, cooling and lighting systems. The rating is compared to two benchmarks for this type of building: one appropriate for new buildings and one appropriate for existing buildings. There is more advice on how to interpret this information on the Government's website www.communities.gov.uk/epbd.

Energy Performance Asset Rating

More energy efficient

A+

Net zero CO_2 emissions

A 0-25

B 26-50

C 51-75

D 76-100

E 101-125

F 126-150

G Over 150

25 This is how energy efficient the building is.

Less energy efficient

Technical information

Main heating fuel:	Natural Gas
Building environment:	Air Conditioning
Total useful floor area (m^2):	38075
Building complexity (NOS level):	3
Building emission rate ($kgCO_2/m^2$):	34

Benchmarks

Buildings similar to this one could have ratings as follows:

32 If newly built

92 If typical of the existing stock

ONLY FOR ILLUSTRATION

5.2 - Passive Design Improvements

On the completion of the model and establishment of the Target Emission rates (TER), the building emissions have been reduced through judicious passive design. This has involved an assessment of non-energy consuming design decisions to create a fabric first approach to energy efficiency. This is through;

- Improved air permeability performance
- Better thermal Insulation

Passive fabric measures across all the building include improvements to the thermal performance and air tightness above Part L requirements of the Building Regulations and this effectively allows the building envelope to attenuate external conditions without recourse to active Building Services.

The table to the right presents the proposed material specification that will be incorporated within the building design to limit heat losses and ensure efficient operation of the proposed studios at Northern quarterproject.

An airtightness of 5m3/hr/m2 @50Pa is targeted for this development to minimise uncontrolled ventilation. An improved air tightness reduces heat losses and energy demand of the Studios.

Construction Element	Building Regulations Specification (2013)	Development Specification
Ground Floor	0.25 W/m^2k	0.18 W/m^2k
External Walls	0.35 W/m^2k	0.20 W/m^2k
Roof	0.25 W/m^2k	0.18W/m^2k
Windows	2.2 W/m^2k	1.5 W/m^2k
External Doors	2.2 W/m^2k	2.2 W/m^2k
Air Permeability	10$m^3/h/m^2$ @50Pa	5$m^3/h/m^2$ @50Pa

5.3 - Energy Efficiency Improvements

In addition to the Passive design measures described in the preceding Section to improve the building envelope performance, the Active Building Services are to be designed to minimise direct energy consumption and CO_2 emissions, with particular emphasis on the following;

- Improved Boiler Efficiencies;
- Reduced Standing Losses from Pipes and Cylinders;
- Increased Hot Water Generating Efficiencies;
- Energy Efficient LED Lighting;
- Improved Lighting Controls;
- Heat Recovery Ventilation;
- Low Energy Motors in Pumps and Fans;
- Efficient Heat Recovery in other systems and,
- Enhanced electric panel heater controls

It is currently proposed for the Studios heat energy for Domestic Hot Water to be generated using gas fired centralised plant and a combined heat and power plant installation complete with energy metering.

Highly efficient electric heat emitters would be provided complete with time and thermostatic control provisions, to minimise wasted energy when areas are unoccupied.

The Studio ventilation systems will be designed to operate continuously at low speed air volumes created by energy efficient fans. This will allow the construction of a tightly sealed and correctly ventilated environment reducing thermal heat loss through reduced infiltration, whilst at the same time improving air quality and reducing the occurrence of moisture and mould.

Waste heat from the Studios will be recovered by high efficiency mechanical ventilation with heat recovery (MVHR) systems. This type of ventilation will help to reduce heat demand and provide filtered air to the Studios thus promoting healthy living conditions for the occupants.

All internal lighting installations will make use of low energy technologies combined with presence and absence detection in conjunction with timed setbacks. 100% low energy lighting provision within the Studios. Photo switching and automatic dimming will be specified to the communal area of the building in order to improve the efficiency of the lighting system.

Compliance with Building Regulations

Part L of the Building Regulations identifies that the average efficacy of a lighting installation shall be greater than or equal to 60 luminaire lumens per circuit Watt. It is also possible to utilise a reduced lighting efficacy where a factor is applied to take in to account lighting controls – see the table below taken from the Non-Domestic Building Services Compliance Guide.

Table 42 Recommended minimum lighting efficacy with controls in new and existing buildings

		Initial luminaire lumens/circuit-watt
General lighting in office, industrial and storage spaces		60
Controls	Control factor	Reduced luminaire lumens/circuit-watt
a daylit space with photo-switching with or without override	0.90	54
b daylit space with photo-switching and dimming with or without override	0.85	51
c unoccupied space with auto on and off	0.90	54
d unoccupied space with manual on and auto off	0.85	51
e space not daylit, dimmed for constant illuminance	0.90	54
a + c	0.80	48
a + d	0.75	45
b + c	0.75	45
b + d	0.70	42
e + c	0.80	48
e + d	0.75	45
General lighting in other types of space		The average initial efficacy should be not less than 60 lamp lumens per circuit-watt
Display lighting		The average initial efficacy should be not less than 22 lamp lumens per circuit-watt

.

All fans, motors and pumps shall be specified to incorporate ECA accredited technology and appropriate controls.

Construction Element	Specification
Ventilation	MVHR
Lighting	100% Low Energy Fittings
Space Heating	Electric Panel Heaters
Heating Control	Programmer and room thermostats
Water Heating	Indirect Hot water cylinder fed from CHP unit

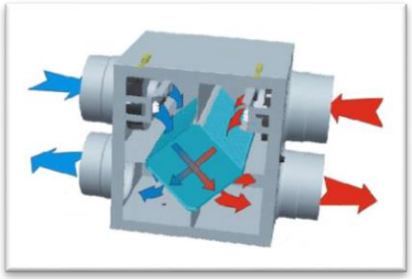

5.4 - Renewable Energy Improvements

In order to comply with Wrexham Local Development Framework Core Strategy Development Plan which requires that the development's Carbon emissions are reduced by 10% when compared to a building meeting Part L of the Building Regulations 2010, renewable and/or low or zero carbon emission systems have been targeted.

All currently acknowledged and commercially available technologies have been considered and assessed with the conclusions summarised below;

Combined Heat and Power (CHP)

On-site generation of electricity and the utilisation of waste heat from this process within a building can create a beneficial arrangement whereby the transmission losses of grid supplied electricity can be omitted. The use of CHP tends to require a steady and continuous heat demand therefore the large quantities of domestic hot water associated with Studio accommodation would satisfy this requirement.

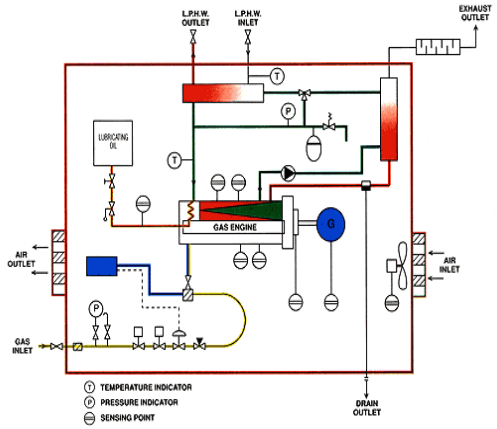

Diagrammatic layout of small scale CHP unit

It has been established that the dominant energy requirement within Studio accommodation results from domestic hot water generation, the use of an accurately sized CHP solution can dramatically reduce the energy and Carbon intensity of this type of development.

Typical CHP Unit

Taking into account the proposed building size, usage and occupancy level, it has been determined that a CHP engine of circa **80kW$_{th}$** and **50kW$_{e}$** would contribute to a reduction in Carbon emissions.

Solar Thermal Collectors

The use of flat plate & evacuated tube thermal panels has been identified as a potential method of harnessing renewable solar energy by pre-heating domestic hot water provision.

The recent introduction of the renewable Heat Incentive may further improve the financial viability for the technology.

Example of Solar Thermal unit

However there is a fundamental conflict between Solar Thermal Collectors and the proposed Combined Heat and Power technology as both systems would be attempting to deliver to the same heating systems and thus would effectively de-rate each other.

For this reason we have not considered the use of solar thermal collectors on this development.

Solar Photovoltaic Panels

The option to utilise roof mounted or Building Integrated Photovoltaic panels to generate electrical energy is a renewable energy method of generating Carbon free electrical power.

Due to the density in occupancy within Studios, there is likely to be a fairly constant base electrical load prevalent on the building which may be mitigated in part by the use of Solar PV.

PV System components

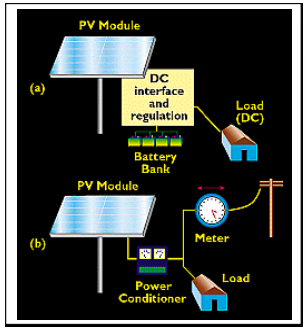

However the flat roof areas of the building are relatively limited and payback periods for Photovoltaic panels can be onerous.

The use of PV technology shall not be discounted and a PV system may be considered to contribute towards the electrical energy demand following completion of the BREEAM LZC assessment.

Wind Turbines

Wind energy can be a cost effective method of renewable power generation and turbines can produce Carbon neutral electricity with outputs ranging from watts to megawatts.

The most common design is for three blades mounted on a horizontal axis, which is free to rotate into the wind on a tall tower. The blades drive a generator either directly or via a gearbox (generally for larger machines) to produce electricity.

The electricity can either link to the grid or charge batteries. An inverter is required to convert the electricity from direct current (DC) to alternating current (AC) for feeding into the grid.

There are a variety of wind turbines on the market ranging from smaller turbines that can be attached directly to a buildings structure to larger stand-alone turbines.

City centre and sub-urban locations generally experience poorer yields for electricity output from small and medium scale wind turbines, due to obstructions and variations in local topography.

Wind Turbine Installation

Also taking into account the visual impact and unwanted noise in an environment with sleeping accommodation the use of wind turbines are discounted from inclusion at this development.

Ground Source Heat Pumps

The ground below buildings remains at a constant temperature of around 10°C to 12°C offering the ability to extract energy in the winter and discharge energy in the summer from cooling with the energy exchange being achieved via open or closed loop systems linked to heat pumps.

Ground Source Heat Pump Installation

The footprint of the development and the surrounding site conditions do not have the potential to deliver an element of space available for closed loop heat exchange, due to this and the conflict with the CHP heat sink, the likely yield, peak load demand and cost feasibility, we have discounted Ground Source Heat Pumps at this development in favour of better performing technologies.

Air Source Heat Pumps

Air source heat pumps provide an accepted solution for using renewable energy taken from ambient air to heat a building in the winter and discharge heat from cooling in the summer.

Typical External Condenser Unit

The use of air source heat pumps in order to provide heating to the development would reduce the opportunity to deploy a centralised heating system that makes use of co-generation technology.

For this reason we have not considered the use of air source heat pumps on this development.

Biomass

Some success on other projects has been made with the implementation of wood fuelled energy equipment forming a Carbon Neutral heat source however these projects have tended to be light density Sub-Urban or even rural in their location. The relatively constrained nature of this site, together with limited storage space and potential delivery issues reduces the opportunity to take advantage of a Biomass solution for this development.

Plantroom Biomass Installation

In addition, flue emissions and the requirements the Clean Air Act has led to a dismissal of this technology for this particular scheme.

Rainwater Systems

Rainwater from roofs and hard surfaces such as car parks can be stored and used in and around properties. The rainwater from the development is typically utilised via a underground storage, which then utilises pumps to pump the rain water back up to a tank at high level within the proposed development which is then utilised via external hosing requirements and flushing purposes on toilets.

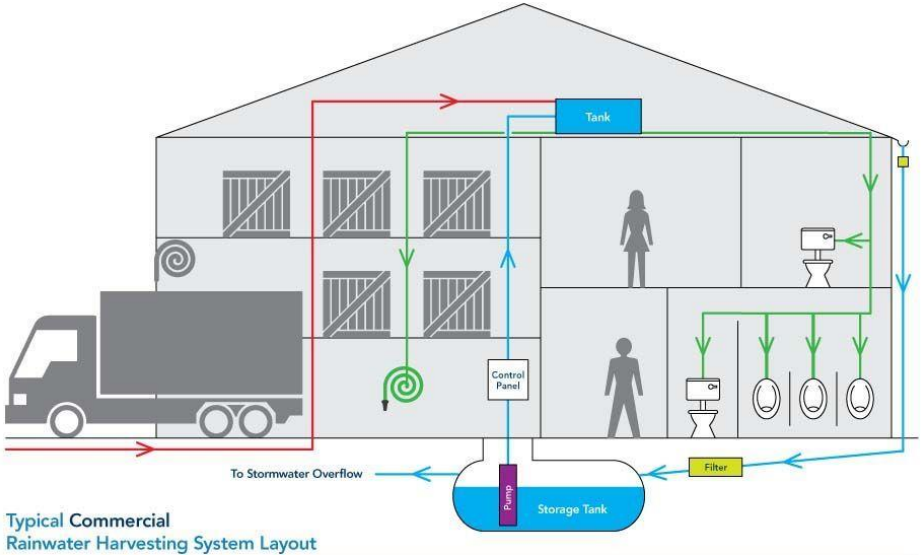

The use of rainwater technology shall not be discounted be as the reduced water consumption may contribute BREEAM LZC assessment.

Local Heat Sources

Local heat sources are a good source of reducing C02 within a project, as distribution losses are minimised and greater efficiency is gained.

Three considerations are given when utilising a connection to local heat source

1. Site location and distance to local heat source
2. Energy type and temperatures i.e heating or cooling and temperature of energy medium.
3. Type of development connecting to local source.

Local supply of heat and power minimise distribution losses, thereby achieving a greater efficiency and reducing CO2 emissions, when compared to the individual systems. In a communal energy system, energy in the form of heat, cooling, and/or electricity is generated from a central source and distributed via a network to surrounding residencies and commercial units. (see example below – source CIBSE)

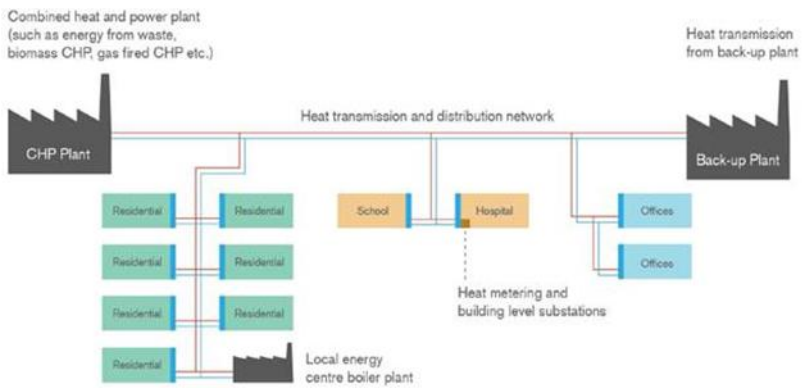

During initial planning stage it was determined that project is not near any existing local heat source to provide heat for the development.

Total Assessments

The central Building Services Systems will be supplemented by Renewable and Low Carbon technologies to further reduce the associated Carbon emissions.

Of the available solutions considered, it is therefore recommended that the proposed scheme implements the following renewable energy technology:

- Combined Heat and Power System

Renewable Technology	Image	Comments
Combined Heat and Power **SELECTED**		The integration of Combined Heat and Power technology is proposed for the new development, to provide base load domestic hot water and heat generation.
Solar Photovoltaic **SELECTED**		The flat roof areas of the building are relatively limited and payback periods for Photovoltaic panels can be onerous, however the systems are low maintenance, easily integrated with building design and no there are limited ongoing costs.

- Solar Photovoltaic panels

The inclusion of Combined Heat and Power technology (CHP) is considered to be the most appropriate for this development and has been incorporated into the primary heat generation for the hot water systems. This will reduce the primary energy use requirement within the development, i.e. the Domestic Hot Water generation, the use of PV also helps offset the carbon requirements for the project.

The Energy Model has been calculated to take account the selected renewable energy technologies proposed for this development.

Air Source Heat Pumps **DISCOUNTED**	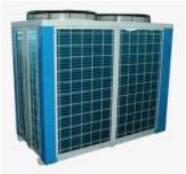	The use of Air Source Heat Pumps has been discounted as they will conflict with the implantation of CHP technology and the opportunity to utilise waste heat from the CHP engine.
Solar Thermal **DISCOUNTED**		There is potential to include flat panel solar thermal collector located at roof level serving the domestic hot water systems. However this solution would conflict with the selected LZC for heat discharge capacity.

Biomass Boilers **DISCOUNTED**	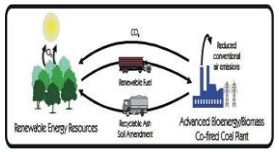	Biomass boiler solutions have been discounted at this location due to potential clean air issues, deliverability logistics and the lack of available storage space for the required quantity of fuel.
Wind Turbines **DISCOUNTED**		Wind turbines have been discounted due to the resulting visual/noise impact from the equipment, and relatively poor performance of the solution when used within Urban and Sub-Urban locations.
Ground Source Heat Pump **DISCOUNTED**	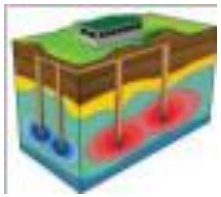	The inclusion of Ground Source Heat Pumps have been discounted within this development due to the conflict with the selected CHP technology, system cost viability and also the site constraints.
Local Heat Source **DISCOUNTED**	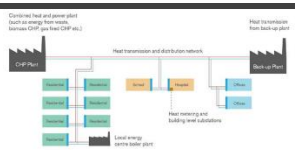	The inclusion of local heat sources has been discounted within this development due location of the development.

Rainwater Harvesting **SELECTED**	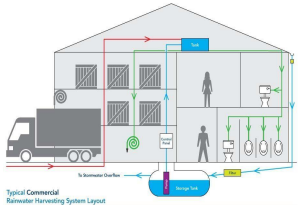	The inclusion of rainwater harvesting is to be considered to meet water consumption guidelines as set out by DEC Regulations.

5.5 - Energy Generation and Distribution Systems

The case for renewable energy systems is clear and we understand that Wrexham City Councils current energy policy requires developments to make the fullest contribution to the mitigation of climate change, and to minimise Carbon Dioxide emissions.

As a consultant, Futureserv has an over-arching philosophy delivering design of truly sustainable energy systems, employing the widely recognised hierarchy;

- Be Lean - Reduce demand wherever possible utilising passive measures.
- Be Clean - Where energy is used, then it should be optimised to operate at the highest efficiencies practical.
- Be Green - Take advantage of renewable options to reduce fossil fuel energy sources.

The proposed Northern quarter development will be designed to be served by a Central Energy Strategy, with Low Temperature Hot Water generated by gas fired boiler plant and CHP units located within the ground floor plant rooms, the LTHW pipework distribution shall be distributed around the Buildings within ceiling voids and service risers.

The central heating plant will be designed around a high efficiency heat generator, providing Domestic Water Heating. Pre-heat to the systems will utilise Low Carbon energy taken from an 80kW$_{th}$ and 50 Kwe Combined Heat & Power system acting as lead heat source in conjunction with thermal storage conjunction with 5m2 of PV requirements to meet Part L compliance.

The main Mechanical and Electrical plant systems would be located within purpose designed plant spaces located at ground floor level incorporating adequate access for future maintenance and plant replacement .

All plant and equipment would be equipped with energy control measures incorporating variable speed drives, with low energy motors provided on ventilation fans and hydraulic pumps.

The development would be provided with a boosted cold water supply system located within the main plant rooms and all sanitary appliances are to be equipped with low water flow devices.

The proposed 50kW$_{e}$ Combined Heat and Power system will provide a source of Low Carbon electricity to the development and where possible, redundant generation will be exported back to grid.

5.6 - Energy Performance Calculations

To enable demonstration that the environmental benefits associated with our energy hierarchy approach to energy demand and emission reductions at Northern quarter, approved SBEM software, Bentley Hevacomp V8i has been used to generate energy demand calculations for the whole development.

The below tables present baseline energy demand and emissions and actual energy demand and emissions for the Building in the form of Target Emission Rates and Building Emission Rates (Kg CO2/m²/annum) and Target Fabric Energy Efficiency and Building Fabric Energy Efficiency (Kwh/m²/annum)

#

Typical Studio Floor Layout

Check on Part L 2A (2013)

1) CO2 emissions (kg CO2/m²/annum)

Notional building emission	42.90	(Cnotional)
Improvement factor	0.00	(Factor)
LZC factor	0.00	(LZC)
(TER = Cnotional x (1 - Factor) x (1 - LZC))		
Target emission rate	42.90	(TER)
Actual emission rate	34.00	(BER)
CO2 emission compliance	Pass	

For full compliance details please refer to the compliance document.

Energy Production by Technology [kWh/m²]

	Actual	Notional
Photovoltaic systems	0.01	0
Wind turbines	0	0
CHP generators	52.73	0
Solar thermal systems	0	0

Building Energy Performance and CO2 emissions

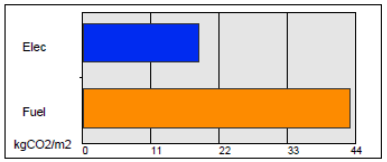

27 kgCO2/m2 displaced by the use of renewable sources.

Building area is 38075.2 m2

Annual Energy Consumption

(Pie chart including Equipment end-use)

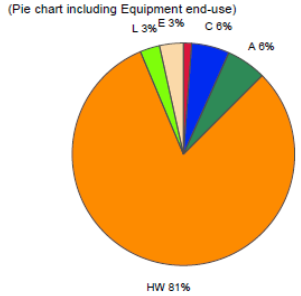

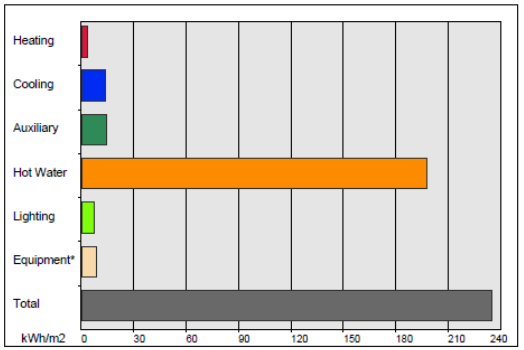

(Pie chart excluding Equipment end-use)

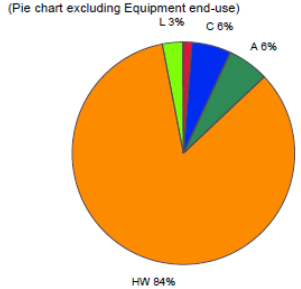

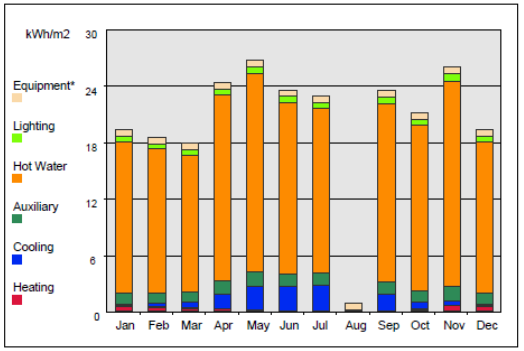

(*) Although energy consumption by equipment is shown in the graphs, the CO2 emissions associated with this end-use have not been taken into account when producing the rating.

Building Rating

	Heating	Cooling	Auxiliary	Lighting	Hot water	Total	
Actual	2.87	13.38	14.12	6.93	197.09	181.66	**kWh/m²**
Notional	4.97	2.96	11.76	7.25	137.97	164.9	**kWh/m²**
Reference	34.03	11.81	14.59	20.55	265.05	346.03	**kWh/m²**

	PartL TER	Typical	SER	BER	
kgCO2/m²	42.9	125.7	68.1	34.0	**EPC Rating**
Band	B	D	B-C	A	25.0

Carbon Reduction from Target Emission Rates	**20% reduction**

Energy Demand	**6,916,740.83 kwh/annum**

This is a total carbon reduction of **8.9 kg/CO2/annum** from the baseline emissions of **42.90 kg/CO2/annum.**

Therefore, the CO_2 reduction due to utilising the energy hierarchy on this development has been calculated to be **20%** and therefore in line with Wrexham City Council Core Strategy Development Plan Document which states that CO_2 reduction of least 10%. The total energy demand of the development at this stage has also been calculated to be **6,916,740.83 kwh/annum.**

FUTURESERV
DESIGN ENGINEER SUSTAIN
WWW.FUTURESERV.CO.UK

Section 6 - Conclusions

This energy statement has summarised the energy hierarchy requirements for Northern quarter to respond to emission reduction targets set out within the Wrexham City Council Local Development Framework Core Strategy Development Plan.

The development will incorporate passive energy techniques available in the construction industry to reduce its ongoing requirement to consume energy to heat, ventilate and light the building, this is achieved by improved efficient fabric design in excess of the thermal properties set out within the Building Regulations.

The development will incorporate energy efficiency measures in its Building Services to reduce the carbon footprint of the site below the passive improvement stage, using highly efficient heat generation plant, heat recovery systems and energy efficient and highly controllable lighting.

The development will make use of renewable and Low Carbon energy techniques comprising an **80kW$_{th}$ 50kW$_{e}$** Combined Heat and Power system and associated thermal storage to generate hot water. (Hot water demand being identified as the dominant energy requirement within the development).

The development may also make use of a PV system to generate electricity **(Circa 5kw)** . The use of this system will require further design development and will be assessed as part of the BREEAM process.

Overall, the Carbon emissions from the proposed Northern quarter development shows potential for a total reduction in emissions from baseline set by current Building Regulations Part L 2013.

The strategy improves on the fundamental principles of the Building Regulations, and will make a significant contribution to reducing the annual CO_2 emissions of the development.