Plas Coch, Wrexham

Tree Survey and Arboricultural Impact Assessment

For:

Carter Lauren

Based on an inspection
carried out

14th February 2018

By

Wyn Davies CMLI, M.Arbor.A

(Rev.A)

MACKLEY DAVIES ASSOCIATES LTD
Ffynnon yr Eirin, Crickhowell Road, Gilwern, Abergavenny
NP7 0EH . 01873 831796 . wyn@mackleydavies.co.uk

Plas Coch,
Wrexham

Tree Survey & Arboricultural Impact Assessment

CONTENTS:

Section 1	Introduction	page 1
Section 2	Inspection & General Observations	page 1
Section 3	Arboricultural Impact Assessment	page 2
Section 4	Tree Schedule	page 3-4

Appendices:

Appendix 1	Methodology	i
Appendix 2	Terms & Definitions used in the Tree Schedule	ii & iii
Appendix 3	The Protection of Trees on demolition & construction sites	iv-vi
	3A: Design of Tree Protection Barriers	*p iv*
	3B: Ground Protection	*p v*
	3C: Precautions outside the Construction Exclusion Zone	*p v*
	3D: Design of Roads, Driveways & Paths near trees:	*p vi*

1 Introduction:

1.1 The following report was prepared on the instructions of Scott Francis of Axiom Architects on behalf of Carter Lauren and concerns the Plas Coch public house, surrounding grounds, access road and car parking area.

1.2 It is based upon the findings of a survey carried out on 14th February 2018 to assess the existing trees in terms of health, condition, form and overall significance within the local environment, the main objective being to assess the degree of constraint it represents with regard to any proposed new development. The methodology used is outlined in Appendix 1, while Appendix 2 sets out definitions of the terms used and codes used in the Tree Schedule.

1.3 Weather conditions were overcast & dry and visibility was adequate for the purposes of this investigation. All inspections were made from ground level only: only those features apparent at the time of the inspection could be considered and no liability can be accepted regarding trees or their parts that were inaccessible or obscured in part or in whole.

1.4 It should be noted that, although the health and safety of the trees is part of the assessment methodology used, this report is intended for planning purposes only; it should not be construed as a tree risk assessment. Faults may be identified and recorded as part of this study but unless the trees in question represent a significant hazard under the existing site conditions, management recommendations will not normally be made. It remains the tree owner's responsibility to ensure the trees are managed appropriately: the assessor can accept no liability for damage or injury sustained as a result of the failure of any tree or its parts.

2 Inspection and General Observations.

2.1 The survey area is as indicated on the accompanying tree constraints plan. This has been based upon a topographical survey provided by Clugston Survey Services (drawing number 4340/10/001).

2.2 At the time of writing there is a tree preservation order which covers three trees on the eastern boundary which includes the horse chestnut (1); it is recommended that no tree felling or other works affecting trees be carried out without discussion with the relevant departments of the local authority.

2.3 There is one mature horse chestnut street tree on the north-east corner of the site and all other trees are young or early-mature ornamental specimens consisting predominantly of Norway maple and including London plane, ash, cherry & rowan. The horse chestnut has been classified as retention category 'B' together with the good specimen Norway maples (9no.) and the London plane (15) which together constitute a significant constraint to development proposals along the eastern boundary. The remaining trees are considered to be low quality category 'C' specimens and the complete removal of these trees is not considered a significant constraint to development.

3 Arboricultural Impact Assessment.

3.1 The proposed construction of a 24 bed new lodge with new access road and car parking layout would involve the removal of a number of existing trees adjacent to the site entrance.

3.2 The proposed access improvements will result in the removal of eight category 'C' trees. These are all early-mature specimens of low arboricultural value and it is considered that their loss can be easily mitigated by new tree planting works.

3.3 Provided the tree protection measures as indicated on the tree protection plan are implemented no other tree removal works will be required.

3.4 The schedule of trees to be removed follows below:

ID	Species:	Dia. (mm)	Height (m)	Cat.
22	Norway maple	220	8	Ci
23	Norway maple	190	6	Ci
24	Rowan	170	5	Ci
25	Norway maple	280	10	Cii
27	Norway maple	250	8	Cii
32	Cherry	175	4.5	Cii
33	Cherry	190	4.5	Cii
34	Cherry	180	4.5	Cii

4 Existing tree schedule.

The table following overleaf provides details of all the trees surveyed; notes on the terms and abbreviations used can be found at Appendix 2 following the tree schedule.

TREE SCHEDULE

[See Appendix 2 for Terms & Abbreviations used in the Schedule]

Details of the Terms & Abbreviations used are provided at Appendix 1

ID	*Species*	Stem No.	Trunk Diam (mm)	Height (m.)	Crown Spread (metres)				Clearance (metres)		Life stage	Health & Vigour	Structural Condition	Remaining useful life	*Observations*	Retention CATEGORY	Protection Radius (m)	RPA (m^2)
					N	E	S	W	Mean	Lowest over site + Direction								
1	Horse chestnut	1	940	16	2.5	4	4.5	4.5	3	-	M	Good	Fair	20-40	Twin stem from 1.6m, located in tarmac path, roots lifting tarmac and pin kerb	Bi	11.3	400
2	Norway maple	1	335	12	4	3	4	5	2.5	-	EM	Good	Good	40+		Bi	4.0	51
3	Norway maple	1	180	10	2.5	1	1.5	2.5	2	-	EM	Fair	Fair	10-20	Stem engulfing tree tie, asymmetrical canopy	Ci	2.2	15
4	Norway maple	4	225	8	2	1	1	2.5	2	-	EM	Fair	Fair	10-20		Ci	2.7	23
5	Norway maple	1	330	10	3	2.5	2.5	3	2.5	-	EM	Good	Good	40+		Bii	4.0	49
6	Norway maple	1	310	10	2.5	2.5	2.5	2.5	2.5	-	EM	Good	Good	40+		Bii	3.7	43
7	Norway maple	1	270	10	1.5	3	2.5	2.5	2.5	-	EM	Good	Good	40+		Bii	3.2	33
8	Norway maple	1	270	10	2	2.5	2.5	2.5	2	-	EM	Good	Good	40+		Bii	3.2	33
9	Norway maple	1	215	8	1	1.5	2	1.5	2	-	EM	Fair	Good	10-20		Cii	2.6	21
10	Norway maple	1	345	10	3.5	4	1.5	3.5	3	-	EM	Good	Good	40+		Bii	4.1	54
11	Norway maple	1	240	12	1	2	1	3	4	-	EM	Fair	Good	10-20		Cii	2.9	26
12	Norway maple	1	475	15	2.5	3	4	4	4	-	M	Good	Good	40+	Exposed surface roots in adjacent grass picnic area	Bii	5.7	102
13	Norway maple	1	325	11	3.5	3.5	2.5	5	4	-	EM	Good	Good	40+		Bii	3.9	48
14	Norway maple	1	340	12	1.5	3	4.5	5	4	-	EM	Good	Good	40+		Bii	4.1	52
15	London plane	1	315	10.5	4.5	4.5	3.5	3.5	2.5	2-S	EM	Good	Good	40+	Located in narrow grass parking nib, lighting wires attached to tree	Bi	3.8	45
16	London plane	1	220	8	3	4	3	2.5	4	-	EM	Good	Good	20-40	Located in narrow grass parking nib, roots lifting road kerb and tarmac	Ci	2.6	22

TREE SCHEDULE

[See Appendix 2 for Terms & Abbreviations used in the Schedule]

ID	*Species*	Stem No.	Trunk Diam (mm)	Height (m.)	Crown Spread (metres)				Clearance (metres)		Life stage	Health & Vigour	Structural Condition	Remaining useful life	*Observations*	Retention CATEGORY	Protection Radius (m)	RPA (m^2)
					N	E	S	W	Mean	Lowest over site + Direction								
17	Ash	1	130	6	1.5	1.5	1.5	1.5	2	-	EM	Good	Good	40+		Ci	1.6	8
18	Ash	1	140	6	1.5	1.5	1.5	1.5	2	-	EM	Good	Good	40+		Ci	1.7	9
19	Ash	1	130	4	1.5	1.5	1.5	1.5	2	-	EM	Good	Good	40+		Ci	1.6	8
20	Ash	1	130	6	1.5	1.5	1.5	1.5	2	-	EM	Good	Good	40+		Ci	1.6	8
21	Ash	1	140	6	1.5	1.5	1.5	1.5	2	-	EM	Good	Good	40+		Ci	1.7	9
22	Norway maple	1	220	8	3.5	2	3	3	2	-	EM	Good	Good	40+		Ci	2.6	22
23	Norway maple	1	190	6	1.5	1.5	1.5	1.5	2	-	EM	Fair	Fair	10-20	Crossing branches	Ci	2.3	16
24	Rowan	1	170	5	1.5	1.5	1.5	1.5	2	-	EM	Fair	Fair	10-20		Ci	2.0	13
25	Norway maple	1	280	10	2.5	2	2	3	2	-	EM	Good	Good	40+		Cii	3.4	35
26	Cherry	1	320	8	2	3	3	4	2	-	EM	Fair	Fair	10-20		Cii	3.8	46
27	Norway maple	1	250	8	2.5	2	2	3.5	2.5	-	EM	Good	Good	20-40		Cii	3.0	28
28	Cherry	1	225	6	3.5	3.5	3.5	3.5	2	-	EM	Fair	Fair	10-20		Cii	2.7	23
29	Cherry	1	270	8	3.5	3.5	3.5	3.5	2	-	EM	Fair	Fair	10-20		Cii	3.2	33
30	Ash	1	215	8	2.5	2.5	2.5	2.5	2	-	EM	Good	Good	40+		Ci	2.6	21
31	Sycamore	2	350	12	2.5	3.5	3.5	3.5	3	-	EM	Good	Good	20-40		Ci	4.2	55
32	Cherry	1	175	4.5	1.5	1.5	1.5	1.5	2	-	EM	Good	Good	20-40		Cii	2.1	14
33	Cherry	1	190	4.5	1.5	1.5	1.5	1.5	2	-	EM	Good	Good	20-40		Cii	2.3	16
34	Cherry	1	180	4.5	1.5	1.5	1.5	1.5	2	-	EM	Good	Good	20-40		Cii	2.2	15

Note: # denotes estimated stem diameter

- The report has been framed as an 'Arboricultural Constraints Report', as defined in BS5837:2012 - *Trees in relation to design, demolition & construction-Recommendations*. Its purpose is to set out and to quantify the degree of constraint offered by existing tree cover with regard to any development or alteration in land-use that may be proposed and is intended to be used to inform feasibility studies and design options. As such it reflects the conditions *as they existed at the time of our inspections*: no account has been taken of any specific development proposals, although it has been assumed that certain unspecified alterations in site usage patterns are likely to occur, which are likely to result in an increase in site occupancy levels. Additional arboricultural input may be required at subsequent stages of design, planning and implementation in relation to the assessment & management of possible arboricultural impacts.

- The survey parameters are as set out in BS5837:2012 and based on the findings each tree or group is allocated to one of four 'Retention Categories' (see Appendix 2, p2). The factors taken into account in categorising the trees include their overall arboricultural quality, their general health and structural stability, their likely useful life-expectancy, their significance to the local landscape and general public amenity value, the degree to which they provide wildlife habitat and enhance local biodiversity and any other social or cultural values that they may embody.

- Also integral to the methodology of BS5837 is the calculation of **Root Protection Areas (RPAs)** for each of the trees in question. The RPA is defined as a "*layout design tool indicating the minimum area around a tree deemed to contain sufficient roots and rooting volume to maintain the tree's viability, and where the protection of the roots and soil structure is treated as a priority."*

- It should be noted that in most cases the plan accompanying this report will show the *nominal* RPAs of the trees, indicated as circles centred upon the tree of a radius such that they enclose an area equal to the relevant RPA. In practice the distribution of roots around a tree will frequently prove to be uneven due to the presence of a variety of constraining influences. These may be physical barriers such as existing foundations etc, or the existence of localised soil conditions inhospitable to root growth, such as waterlogging or soil compaction. Conversely, soil conditions may be particularly *conducive* to root development in one quarter and this might also lead to an asymmetric distribution of roots around the tree. However in most cases the nominal circular areas as indicated will provide a reasonable guide as to where special measures will be required to protect tree roots and preserve good soil condition.

- The RPAs of the trees will provide the basis for defining **Construction Exclusion Zones (CEZs),** these being areas around all of those trees intended to be retained where access should be prevented throughout the entire process of site preparation and construction. In certain cases the CEZ will exceed the size of the RPA in order to accommodate the aerial parts of wide-spreading trees.

- Access within the CEZ should be prevented through the erection of barriers, constructed in accordance with BS5837:2012. Where access within an RPA is unavoidable, appropriate ground protection should be installed. Outline details of the design of suitable barriers and ground protection are given in Appendices A & B. These protection measures should be put in place prior to any site clearance or construction work commencing on the site and they should remain *in situ* until all works have been completed. Some activities within the CEZs may be acceptable but should not be put in hand until appropriate arboricultural advice has been sought.

The **DIMENSIONS** Taken are:

- **STEM-No.** indicates the number of main stems (i.e. whether the trunk divides at or below 1.5m; (Used in the calculation of RPA.) "m-s" = Multi-stemmed.
- **DIAMETER** (in centimetres), obtained from the girth measured at approx.1.5m. For trees with 2 to 5 sub-stems, a notional figure is derived from the sum of their cross-sectional areas. For multi-stemmed trees the notional diameter may be estimated on the basis of the average stem size x the number of stems. (A notional diameter may be estimated where measurement is not possible.)
- **HEIGHT**, estimated and expressed in metres.
- The **CROWN SPREAD** is expressed in terms of the crown radii estimated at the four cardinal points (or as otherwise specified) and given in metres.
- **CLEARANCES** are indicated as an estimate of the *mean, overall* height of the canopy above ground level with an additional figure for the height above ground of the *lowest significant branch* within the site, together with the direction of its growth.

LIFE STAGE is defined as follows:

P recently Planted; sapling: A tree that is still establishing and which would be relatively easy to replace or even transplant. Likely to be vulnerable to damage from (e.g.) strimmers, mowing equipment, drought, vandals, etc. (Easily replaced thus a negligible constraint).

Y Young, establishing trees. Should be growing fast, usually primarily increasing in height more than spread, but as yet making limited impact upon the landscape.

EM Early-mature. Established young trees, normally of good vigour and still increasing in height, but beginning to spread laterally. Beginning to make an impact upon the local landscape & environment.

M Mature: Well-established trees, still growing with some vigour, but tending to fill out and increase spread. Bark may be beginning to crack & fissure. In the middle half of their safe, useful life-expectancies.

LM Late-Mature: In full maturity. Still retaining some vigour but growth slowing.

O Old: Fully mature with vigour declining. Likely to possess features that could be regarded as potential faults, such as large, ponderous branches, old wounds etc. etc., but also likely to be of high amenity value.

A Ancient: Old trees can survive for very many years with healthy growth continuing although the tree may be of low vigour. Crown size usually becomes reduced, either through natural branch-loss or through management (e.g. pollarding). Decay is usually present. Such trees may embody certain hazards but they are also likely to be of considerable conservation value (i.e. "Veteran" trees).

HEALTH & VIGOUR: Essentially a snapshot of the general health of the tree based upon its general appearance, its apparent vigour and the presence or absence of symptoms associated with poor health, physiological stress etc. (Fungal infections may be recorded here but *decay giving rise to structural weakness* would be recorded under 'Structural Condition' – see next parameter):

Good no significant health issues.

Fair indications of slight stress or minor disease (e.g. the presence of minor dieback/deadwood or of epicormic shoot growth)

Poor Significant stress or disease noted; larger areas of dieback than above

Bad Severe decline; widespread dieback and/or severe stress; life-threatening disease.

Dead (or Moribund)

STRUCTURAL CONDITION: Defects affecting the structural stability of the tree, including decay, significant dead wood, root-plate instability or significant damage to structural roots, weak forks (e.g. those where bark is included between the members) etc. etc. Classified as:

Good No obvious structural defects: basically sound

Fair Minor, potential or incipient defects

Poor Significant defect(s) likely to lead to actual failure in the medium to long-term

Bad Defects liable to cause significant failure in the short term, or to lead to a major or total collapse in the foreseeable future

Severe Tree that has already suffered or is at imminent risk of a major collapse.

REMAINING USEFUL LIFE EXPECTANCY: An estimate of the length of time in years that a tree might be expected to continue to make a useful contribution to the locality at an acceptable level of risk (based on an assumption of continued routine maintenance)

V -	less than 10 years	S -	10+ years
M -	20+ years	L -	40+ years

RETENTION CATEGORY: Trees are classed as category **U, A, B** or **C**, based on criteria given in BS5837:2012; summary definitions as follow (see BS5837 for further details). Categories A, B and C are further characterised by the use of sub-categories, which attempt to identify what aspect of the tree is the main source of its perceived value:
(**i**) **arboricultural** qualities (**ii**) **landscape** qualities and (**iii**) **cultural, historic or ecological/conservation** qualities. Examples of these qualities for each of the three categories are given below, although these are indicative only.

Note: *This is NOT a health and safety classification; the classification does not take into account any requirement for remedial tree care or ongoing maintenance apart from that which may affect the trees' general suitability for retention.*

U UNSUITABLE: (red) Trees likely to prove to be unsuitable for retention for longer than 10 years should any significant increase in site usage arise as a result of development.

Dead or moribund trees; those at risk of collapse or in terminal decline;; trees that will be left unstable by other essential works such as the removal of nearby category U trees; trees infected by pathogens that could materially affect other trees; low quality trees that are suppressing better specimens

(Category U trees may have conservation values which it might be desirable to preserve.
It may also include trees that should be removed irrespective of *any* development proposals.)

A HIGH QUALITY (green) Trees or groups whose retention should be given a particularly high priority within the design process. Normally with an expected useful life-expectancy of at least 40 years.

(i) Notably fine specimens; rare or unusual specimens; essential component trees within groups, semi-formal or formal plantings (e.g. dominant trees within an avenue etc.)

(ii) Trees, groups or woodlands of particular visual importance as landscape features.

(iii) Trees, groups or woodlands of particular significance by virtue of their conservation, historical, commemorative or other value (e.g. veteran trees or wood pasture.)

B MODERATE QUALITY (blue): Trees or groups of some importance with a likely useful life-expectancy in excess of 20 years. Their retention would be highly desirable; selective removal of certain individuals may be acceptable, but only after full consideration of all alternative courses of action.

(i) Fair quality but not exceptional; good specimens showing some impairment (e.g. remediable defects, minor storm damage or poor past management.)

(ii) Acceptable trees situated such as to have little visual impact within the wider locality. Also numbers of trees, perhaps in groups or woodlands, whose value as landscape features is greater collectively *than would warrant as individuals (such that the selective removal of an individual would not impact greatly upon the trees' overall, collective value).*

(iii) Trees, groups or woodlands with clearly identifiable conservation or other cultural benefits.

C MINOR VALUE (grey): Trees or groups of rather low quality, although potentially capable of retention for at least approx. 10 years. *Also* small trees below 15cm diam.
Potentially retainable, but not of sufficient value to be regarded as a significant planning constraint.

(i) Unremarkable trees of very limited merit or of significantly impaired condition.

(ii) Trees offering only low or short-term landscape benefits; also secondary specimens within groups or woodlands whose loss would not significantly diminish their landscape value.

(iii) Trees with extremely limited conservation or other cultural benefit.

ROOT PROTECTION AREA (RPA): *This is the area in square metres formed by a circle of radius* (the **Protection Radius**) *twelve times the actual or notional stem diameter of the tree (see 'Diameter', above). The RPA represents the minimum area deemed to contain sufficient roots & soil to maintain the tree's viability. It is the basis whereby the layout of the* **Construction Exclusion Zone (CEZ)** *is determined, which should encompass an area equal to the RPA, although its form may be adapted in the light of arboricultural considerations and pre-existing physical constraints. The CEZ should be protected by sturdy temporary fencing (see BS5837:2012) throughout the entire process of site preparation and construction.*

*A **CONSTRUCTION EXCLUSION ZONE** should be established around all trees intended for retention, based upon the Root Protection Areas (RPAs) of those trees. These zones should be adequately protected by appropriately designed **Protective Barriers** & **Ground Protection** throughout the all demolition & construction processes.*

A: PROTECTIVE BARRIERS

- Vertical barriers should be erected and ground protection installed **before any materials or machinery are brought onto the site and before any demolition, development or stripping of soil commences**. Areas of new or retained structure planting should be similarly protected, based on the extent of the soft landscaping as shown on the approved drawings. The project arboriculturist should confirm that barriers and ground protection have been erected and set out correctly prior to the commencement of other operations, and that they are fit for purpose
- Where required, pre-development tree work may be undertaken before the installation of tree protection, with the agreement of the project arboriculturist and the local planning authority.
- **Once erected, barriers and ground protection should be regarded as sacrosanct,** and should not be removed or altered without prior recommendation by the project arboriculturist and approval of the local planning authority.
- Barriers should be fit for the purpose of excluding construction activity and appropriate to the degree and proximity of work taking place around the retained tree(s). On all sites, special attention should be paid to ensuring that barriers remain rigid and complete.
- In most cases, barriers should consist of a scaffold framework in accordance with the illustration below, comprising a vertical and horizontal framework, well braced to resist impacts, with vertical poles spaced at a maximum interval of 3m. Onto this, weldmesh panels should be securely fixed.

Default specification for protective barrier

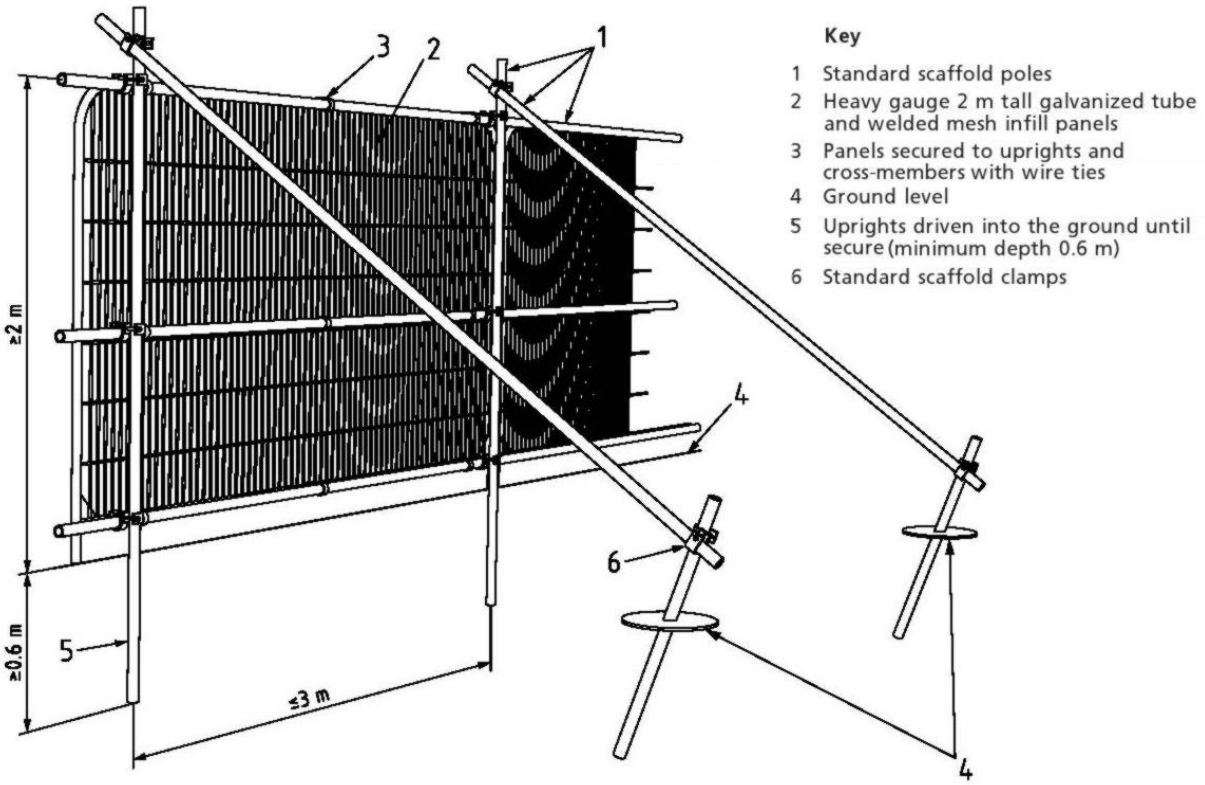

- Where driven vertical poles are impractical due to the likelihood of causing damage to tree roots or to underground services, above-ground stabilizing systems may be specified.
- Alternative specifications may be acceptable but should be specified in conjunction with the project arboriculturist but they must always ensure an adequate degree of protection for the conditions likely to obtain on site. Weldmesh panels on rubber or concrete feet may be sufficient where protection is only required from pedestrians, cars, vans and manually operated plant, but in such cases the panels should be securely joined together using a minimum of two anti-tamper couplers, installed so that they can only be removed from inside the fence. The panels should be supported on the inner side by stabilizer struts.
- It may be appropriate on some sites to use temporary site office buildings as components of the tree protection barriers.

B: GROUND PROTECTION

- Where construction working space or temporary construction access is justified within the RPA, this should be facilitated by a set-back in the alignment of the tree protection barrier. In such areas, suitable existing hard surfacing that is not proposed for re-use as part of the finished design should be retained to act as temporary ground protection during construction, rather than being removed during demolition. The suitability of such surfacing for this purpose should be evaluated by the project arboriculturist and an engineer as appropriate
- However, where the set-back of the tree protection barrier would expose unmade ground to construction damage, new temporary ground protection should be installed as part of the implementation of physical tree protection measures prior to work starting on site. Such temporary ground protection should be capable of supporting any traffic entering or using the site without being distorted or causing compaction of underlying soil.
- The ground protection might comprise one of the following:
    - *a) for pedestrian movements only, a single thickness of scaffold boards placed either on top of a driven scaffold frame, so as to form a suspended walkway, or on top of a compression-resistant layer (e.g. 100 mm depth of woodchip), laid onto a geotextile membrane;*
    - *b) for pedestrian-operated plant up to a gross weight of 2 t, proprietary, inter-linked ground protection boards placed on top of a compression-resistant layer (e.g. 150 mm depth of woodchip), laid onto a geotextile membrane;*
    - *c) for wheeled or tracked construction traffic exceeding 2 t gross weight, an alternative system (e.g. proprietary systems or pre-cast reinforced concrete slabs) to an engineering specification designed in conjunction with arboricultural advice, to accommodate the likely loading to which it will be subjected.*
- In all cases, the objective should be to avoid compaction of the soil, which can arise from the single passage of a heavy vehicle, especially in wet conditions, so that tree root functions remain unimpaired.

C: ADDITIONAL PRECAUTIONS OUTSIDE THE EXCLUSION ZONE:

- Once the exclusion zone has been protected by barriers and/or ground protection, construction work can commence. All weather notices should be erected on the barrier with words such as:

Construction exclusion zone – NO ACCESS

In addition the following should be addressed or avoided.

- Care should be taken when planning site operations to ensure that wide or tall loads, or plant with booms, jibs and counterweights (including drilling and piling rigs) can operate without coming into contact with retained trees. Such contact can result in serious damage to them and might make their safe retention impossible. Consequently, any transit or traverse of plant in close proximity to trees should be conducted under the supervision of a banksman to ensure that adequate clearance from trees is maintained at all times. In some circumstances it may be impossible to maintain adequate clearance thus necessitating access facilitation pruning. Local Planning Authority consent for such pruning may be required.
- Material which will contaminate the soil, e.g. concrete mixings, diesel oil and vehicle washings, should not be discharged within 10 m of the tree stem.
- Fires should be avoided on sites if at all possible. Where they are unavoidable they must not be lit in a position where heat could affect the trunk, branches or foliage of any tree. The size of the fire and the wind direction should be taken into account, and fires must be attended at all times.
- Notice boards, telephone cables or other services should not be attached to any part of the tree.
- It is essential that allowance should be made for the slope of the ground so that damaging materials such as concrete washings, mortar or diesel oil cannot run towards trees..

D: ROADS, DRIVEWAYS AND PATHS NEAR TREES (including outline notes on 3-dimensional 'Cellular Confinement' load-support systems)

1. The overriding principles to be adhered to in the design of hard surfaces near trees are: (i) the preservation of the character of the soil in a form no more compacted or otherwise disturbed, disrupted or contaminated than it is at present; (ii) to maintain gaseous exchange between the upper layers of soil and the atmosphere; (iii) to ensure adequate (but not excessive) water supply to the soil; and (iv) the avoidance of damage to retained trees as a result of root severance, crushing or abrasion.
2. Tree roots are concentrated in the upper metre of the soil, with the great majority 300-600 mm below the soil surface. Beyond 3 or 4 metres from the trunk most of the roots are small in diameter and not readily apparent as originating from trees. They are nevertheless vital to the tree's well-being, as well as being very easily damaged by even rather shallow soil disturbance, such as may be required in establishing a path or driveway.
3. Wherever possible paths etc should be routed well outside the Root Protection Area (RPA), when problems should not arise. Note, however, that the position of a path or road on a layout plan may indicate the surface only: *Allowance must be made for any kerbing, and the footing into which kerbs will be set, when considering possible conflicts between trees and nearby paths, roadways etc*.
4. Where there is no alternative other than for such a route to impinge upon the RPA of a tree, the possibility of damage can be significantly reduced through the use of No-Dig techniques, where an adequately load-bearing sub-base and hard-wearing surface is established over existing roots without them being disturbed. A variety of techniques are available including three-dimensional cellular confinement systems[1]. Alternatively, piles, pads or elevated beams can be used to support surfaces to bridge over the RPA or, following exploratory investigations to determine location, to provide support within the RPA while allowing the retention of roots greater than 25 mm in diameter. The design of all such systems should be specified in liaison with the project arboriculturist.
5. Temporary haul roads must be similarly designed and specified, taking into account the extra loading that is likely to be imposed by construction traffic. Where proposed *permanent* new surfaces will be used for construction access, it is essential that this extra loading and wear is taken into account during the design process. A temporary sacrificial wearing surface may be required for the duration of construction activity.
6. Wherever possible, new surfaces should permit the percolation of moisture into the soil and allow free gaseous exchange. Suitable permeable wearing course include washed gravel (either loose or in laid gravel-retention grids, but note that self-binding gravels and 'hoggin' is NOT suitable) or paving slabs or block pavers with built-in infiltration spaces. These must be laid dry-jointed, bedded onto a free-draining sub-base such as sharp sand or coarse, no-fines aggregate. Porous asphalt and resin-bonded gravels will provide good porosity initially but will eventually become blocked by fines and should be laid following the principles used for impermeable surfaces (see below).
7. New permanent impermeable hard surfacing should not exceed 20% of any existing un-surfaced ground within the RPA. The hard surface should be resistant to or tolerant of deformation by tree roots, and should be set back from the stem of the tree and its above-ground root buttressing by a minimum of 500 mm to allow for growth and movement. Resulting gaps may be filled using appropriate inert granular material.
8. Prior to and during installation, the soil structure in the area beneath the proposed new surfacing must be protected from compaction, using temporary ground protection where necessary (see appendix 2B). During installation the new surface should be "rolled out", using machinery working forward from the surface as it is constructed.
9. If it proves necessary, existing surface vegetation should be killed using an *appropriate herbicide* that will not leach into the soil and will not affect tree roots. All herbicides must be applied strictly in accordance with the manufacturer's instructions.
10. The soil should not be skimmed to reduce ground levels. However loose organic matter and/or turf should be removed carefully, using hand tools. If the surface needs to be levelled or raised, this should be achieved using a suitable granular fill material (e.g. no-fines gravel, washed aggregate etc.)

[1] Suppliers of suitable proprietary products include Geosynthetics ('CellWeb') and Terram ('Geocell') and Greenfix ('Geoweb')

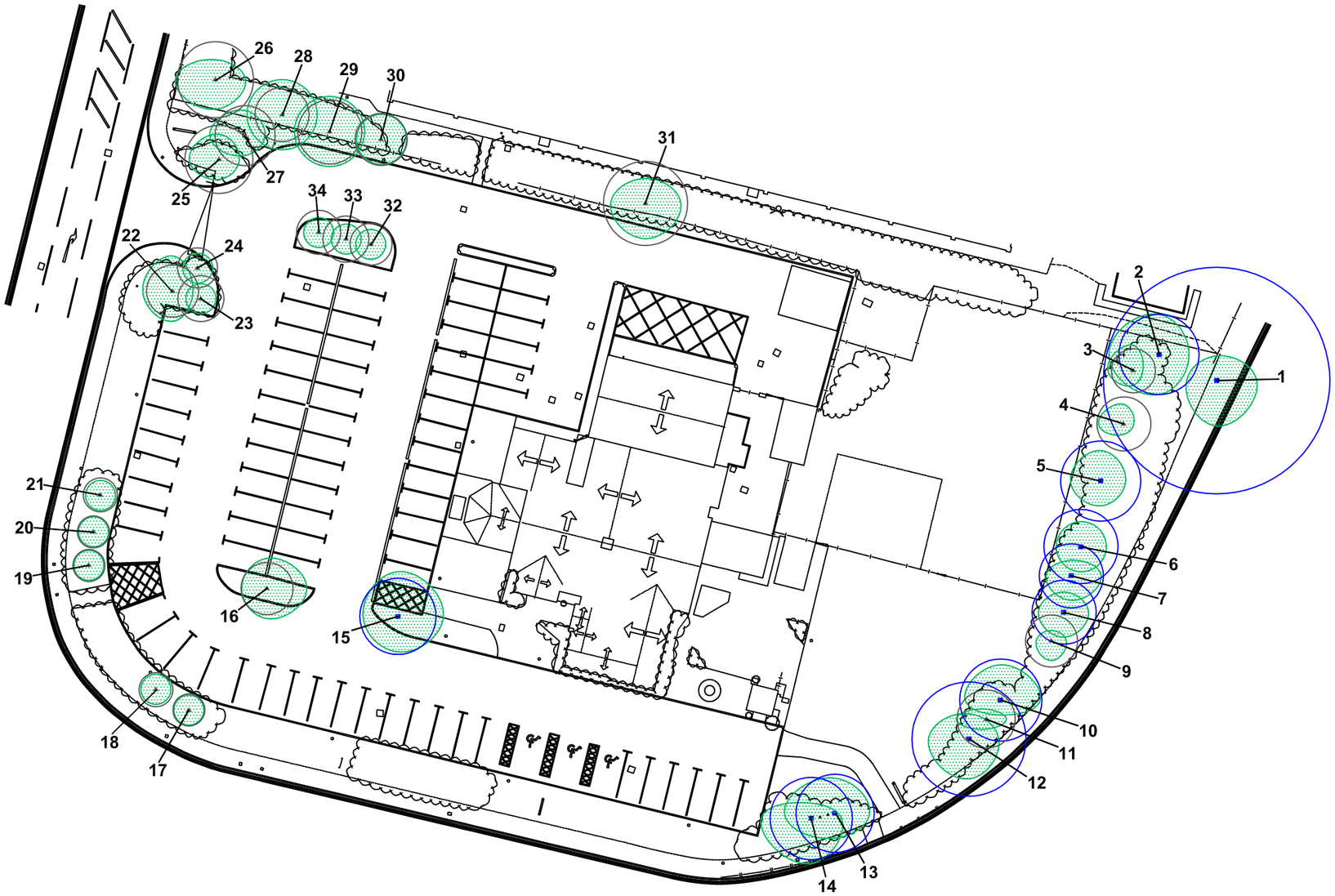

KEY

Trees are indicated by symbols below, colour coded to indicate their 'Retention Categories'.

- Category U (defective, negligible or redundant trees)
- Category A (high retention value)
- Category B (moderate retention value)
- Category C (low retention value)
- APPROXIMATE crown spread of individual trees

The nominal ROOT PROTECTION AREA (RPA) of each tree is indicated by a solid line using the colour coding above

See tree schedule for all details of trees as numbered on the plan.

All dimensions must be checked on site and not scaled from this drawing.

This drawing is for the purposes of PLANNING.
Based on Ordnance Survey data as supplied.
OS Licence 100043966

MACKLEY DAVIES ASSOCIATES LTD
Ffynnon yr Eirin . Crickhowell Road. Gilwern
Abergavenny . NP7 0EH . 01873 831796 .
wyn@mackleydavies.co.uk

SITE
Plas Coch, Wrexham

CLIENT
Carter Lauren

DRAWING TITLE
Tree Location & Constraints Plan

SCALE	1:500 @ A3	Job No.	18/621/01
DATE	Feb 2018	REVISION No.	

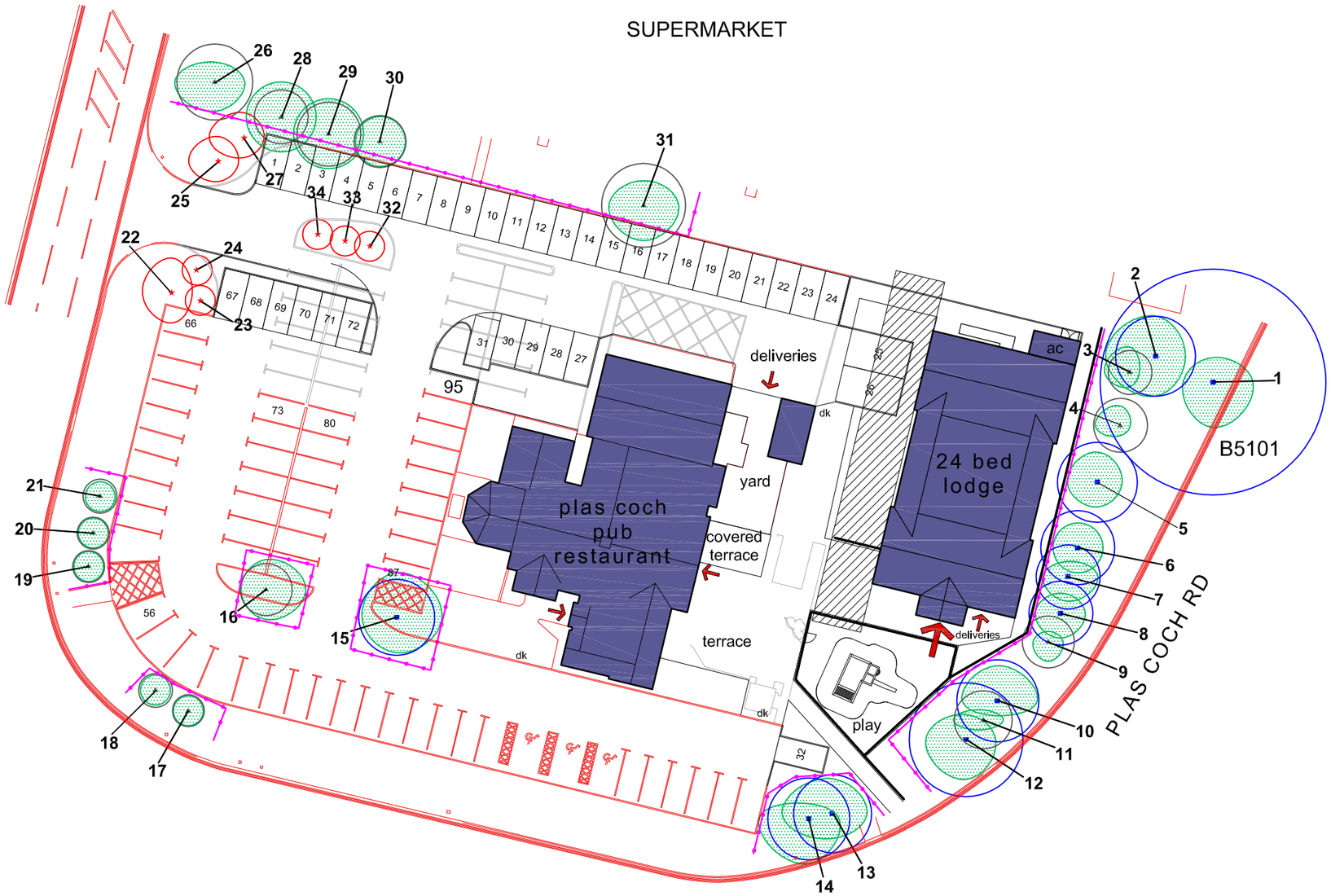

KEY

Trees are indicated by symbols below, colour coded to indicate their 'Retention Categories'.

- Trees to be removed
- Category A (to be retained)
- Category B (to be retained)
- Category C (to be retained)
- Existing canopy
- Line of protective fence (temporary barrier)

The nominal ROOT PROTECTION AREA (RPA) of each tree is indicated by a solid line using the colour coding above.

See tree schedule for all details of trees as numbered on the plan.

All dimensions must be checked on site and not scaled from this drawing.

This drawing is for the purposes of PLANNING.
Based on Ordnance Survey data as supplied.
OS Licence 100043966

MACKLEY DAVIES ASSOCIATES LTD
Ffynnon yr Eirin . Crickhowell Road. Gilwern
Abergavenny . NP7 0EH . 01873 831796 .
wyn@mackleydavies.co.uk

SITE
Plas Coch, Wrexham

CLIENT
Carter Lauren

DRAWING TITLE
Tree Protection Plan

SCALE	1:500 @ A3	Job No.	18/621/02
DATE	Feb 2018	REVISION No.	A