Tree Survey /Arboricultural Method Statement/Tree Protection Plan

Approved Vehicular Access to Bryn Y Groes, off Chester Road, Gresford, Wrexham

Prepared for:

SG ESTATES

Planning Ref: P2013/0173
Our Ref: 14/AIA/WXM/144

12 May 2014

Tree Solutions Ltd

T: 01244 389114
E: info@tree-solutions.co.uk
W: www.tree-solutions.co.uk

1.0 Introduction

1.1 Tree Solutions Ltd has been commissioned by SG Estates to prepare a site specific Arboricultural Method Statement (AMS) in order to satisfy and discharge Planning Condition No 9 of Planning Code No. P/2013/0173 – New Access off Chester Road, Gresford, Wrexham.

1.2 This Method Statement sets out the methodology and protection measures for all works within close proximity to trees located on and adjoining the site boundary indicated on the Tree Protection Plan at ***Appendix 2***. All trees have been surveyed and are detailed within the tree survey schedule sheets at ***Appendix 1***. Compliance with this method statement will be a requirement of all relevant contracts associated with the approved development. Copies of this document will be made available for inspection on site.

1.4 Trees to be retained and details including the designated Root Protection Area and location of tree protective fencing are clearly indicated on the Tree Protection Plan Ref 14/AMS/WXM/144, Drawing No 1 which is at ***Appendix 2*** to this report.

1.5 The purpose of the AMS is to provide information on protection and control measures affecting the existing tree stock. The works, with applicable methodology, are divided into the sequence of operations at paragraph 4.0:

2.0 STATUTORY CONTROLS

2.1 All trees are protected by a Tree Preservation Order.

3.0 SITE PLAN

3.1 The observations and recommendations contained in this document relate to the approved drawing no: SCP/12283/F01 undertaken by SCP.

3.2 The method statement should be read in conjunction with the enclosed Tree Protection Plan, which is based upon the above drawing.

4.0 SEQUENCE OF OPERATIONS

From commencement of the above development, the following methodology shall be implemented in the manner and sequence described:

1. Erect temporary tree protective fencing
2. Main construction phase
3. Removal of temporary fencing
4. Landscaping within RPA of trees

1. Erect Temporary Tree Protective Fencing

1. Prior to commencement of any construction, preparation, excavation or material deliveries the main contractor shall erect the temporary protective fencing as detailed in the 'Tree Protection Specification' and in the location indicated on the Tree Protection Plan.

2. Tree Solutions are to be given 5 days written notice as soon as all protective fencing has been erected in order to inspect the specification and location. An inspection report will be completed and returned to the LPA Tree Officer for approval. Any damage occurring to protective fencing during the demolition or construction phase shall be made good by the main contractor

2. Main/Construction Phase

1. Tree protective fencing to be erected prior to any construction plant or materials entering the site
2. Tree protective barriers in accordance with BS 5837: 2012 will be erected to prevent damage to the tree stems and any movement of plant with the RPA
3. There shall be no storage of construction material, site parking, site accommodation or equipment in any area designated as the Root Protection Area (RPA) and Construction Exclusion Zone (CEZ) and enclosed by Temporary Protective Fencing
4. No materials that are likely to have an adverse effect on tree health such as oil, bitumen or cement will be stored or discharged within 10 metres of the trunk of a tree that is to be retained. No fires will be lit
5. The site agent shall supervise deliveries by self-loading crane, with vehicles positioned in such a manner that retained trees are not at risk of damage

Cement Mixing

- The cement mixer will be laid on top of plywood boards in a position located outside the RPA of any tree or hedgerow. The mixer will be kept in this position throughout the development work.

Avoiding Damage to Stems and Branches

- Care shall be taken when planning site operations in proximity to trees to ensure that wide or tall loads or plant with booms, jibs and counterweights can operate without coming into contact with retained trees. Such contact can result in serious injury resulting in safe retention impossible

On Site Storage of Spoil and Building Materials

- Prior to and during all site construction works no spoil will be stored and no cement mixing will take place within the Root Protection Area of any tree on or adjacent to the site even if proposed site work is to be within the crown spread. Any encroachment within this protected area will only be with the prior agreement of the LPA Arboricultural Officer

3. Remove all Temporary Tree Protective Fencing

1. Tree Protective fencing will only be removed upon completion of all construction work and once all machinery associated with the works has left site.

4. Landscaping within RPA of Trees

1. There shall be **no rotovation** of ground within any area designated as a Root Protection Area (RPA) and Construction Exclusion Zone (CEZ) and enclosed by Temporary Protective Fencing.
2. No hard landscaping works or excavation for cables or any other service should be installed within the Root Protection Area (RPA) and Construction Exclusion Zone (CEZ) without the written consent of the LPA.

5. ARBORICULTURAL SITE SUPERVISION

1 The erection of all tree protection measures outlined in this AMS and as indicated on the Tree Protection Plan will be inspected by the contract Arboricultural Consultant immediately after erection. Photographic evidence of the location and specification of all protective fencing will be forwarded to the LPA Tree Officer upon completion.

2 All proposed work within any designated RPA will be overseen by the contract Arboricultural Consultant with photographic records taken and signed inspection report emailed direct to the LPA for approval

3 The contract Arboricultural Consultant to make visits to site to inspect all tree protection measures during all key development work within close proximity to retained trees.

4 Site manager to email monthly photographs of all tree protective measures to LPA Tree Officer

TREE PROTECTION SPECIFICATION

The Root Protection Area (RPA) and Construction Exclusion Zone (CEZ) enclosed by temporary protective fencing shall:

1. Be erected prior to any demolition works, delivery of site accommodation or materials and shall remain for the duration of construction works.
2. Preclude all construction activity with the sole exception of specified arboricultural works and as such works as have been agreed by all parties and to be carried out under supervision.
3. Be protected by temporary protective fencing and other measures as specified.
4. Preclude the storage or tipping of all materials and substances, in addition, toxic substances such as fuels, oils, additives, cement, or other deleterious substances within 5.0 meters of an exclusion zone.
5. Clearly legible weatherproof signage, stating "Protected Trees – Exclusion Zone" shall be attached to the fencing 1.5m from the ground, facing out of the Tree Protection Zone located at regular intervals along the fence line. .
6. Other than works detailed within this method statement or approved in writing by the Local Planning Authority (LPA), no works including storage or dumping of materials shall take place within the exclusion zones defined by the protective fencing.
7. Any incursion into the Root Protection Area (RPA) and Construction Exclusion Zone CEZ) must be by prior arrangement, following consultation with the LPA

Protective Fencing Detail

1. Magenta

Figure 2 **Default specification for protective barrier**

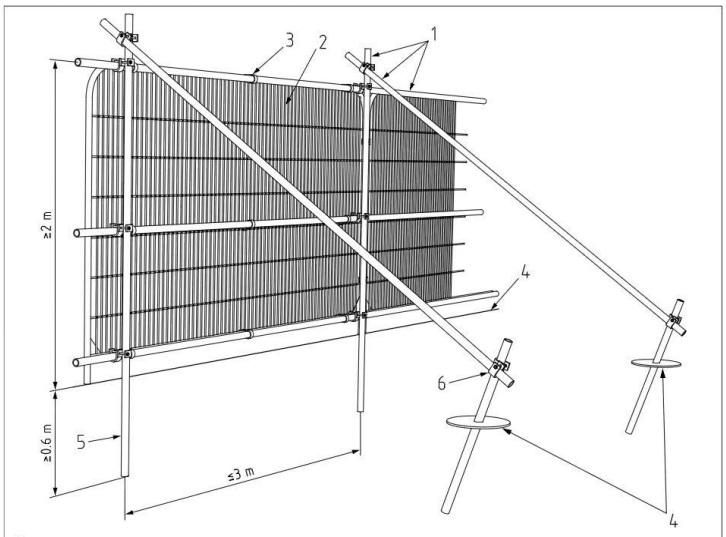

Key
1 Standard scaffold poles
2 Heavy gauge 2 m tall galvanized tube and welded mesh infill panels
3 Panels secured to uprights and cross-members with wire ties
4 Ground level
5 Uprights driven into the ground until secure (minimum depth 0.6 m)
6 Standard scaffold clamps

Useful Contacts

Arboricultural Consultant

Name: Alistair Henderson

Tel: 01244 389114

Mobile: 07766 774508

Email: alistair@tree-solutions.co.uk

LPA Arboricultural Officer

Name: Moray Simpson

Tel: 01978 298763

Email: moray.simpson@wrexham.gov.uk

© Tree Solutions Ltd 2014

Appendix One

Tree Survey Schedule

TREE SURVEY SCHEDULE (BS5837: 2012)

TREE SOLUTIONS LTD

SITE:	BRYN Y GROES, GESFORD, WREXHAM
CLIENT:	SG ESTATES
BRIEF:	TREE SURVEY FOR TREE PROTECTION PLAN FOR NEW SITE ACCESS

SURVEYOR:	A. HENDERSON
ASSESSMENT DATE:	07 MAY 2014
VIEWING CONDITIONS:	GOOD
JOB REFERENCE:	14/AIA/WXM/144

TREE NO. T - Tree G - Group H- Hedge	SPECIES (COMMON NAME)	AGE	HEIGHT (m) + CROWN CLEARANCE/ DIRECTION OF GROWTH (N.S.E.W)	RADIAL CROWN SPREAD (m) N	S	E	W	STEM/ MULTI-STEM* DIA.(mm)	VITALITY	COMMENTS	MANAGEMENT	CATEGORY & SUB-CATEGORY GRADING BS 5837	BS 5837 RADIUS (m) RPA (m^2)
T1	Horse Chestnut	FM	20 1W	4	6	8	10	1005	G	• Asymmetric crown due to close proximity to adjacent trees that have now been removed • Prominent tree to locale • E.R.C. 20+	• No works	A2	12 457m²
T2	Lime	M	21 1N	4.5	4	5	4	600	G	• Mass of epicormic growth around base of stem impeding inspection • Good quality tree with no significant defects • Located on site frontage - RPA modified due to proximity to Chester Road • E.R.C. 20+	• No works	A2	7.2 163m²

HEADINGS & ABBREVIATIONS

TREE NO.	REFERENCE NUMBER. REFER TO PLAN OR NUMBERED TAGS WHERE APPLICABLE (T = TREE, G = GROUP, H = HEDGE)
SPECIES:	COMMON NAME (LATIN NAMES AVAILABLE ON REQUEST)
AGE RANGE/LIFE STAGE:	Y = YOUNG, SM = SEMI MATURE, EM = EARLY MATURE, M = MATURE, PM = POST MATURE
HEIGHT:	ESTIMATED AND RECORDED IN METRES. APPROXIMATELY 1 IN 10 TREES ARE MEASURED USING A CLINOMETER AND THE REMAINDER ESTIMATED AGAINST THE MEASURED TREES
CROWN SPREAD:	MAXIMUM CROWN RADIUS MEASURED TO THE FOUR CARDINAL COMPASS POINTS FOR SINGLE SPECIMENS ONLY (MEASUREMENT FOR TREE GROUPS - MAXIMUM RADIUS OF THE GROUP)
CROWN CLEARANCE & DIRECTION OF GROWTH:	HEIGHT IN METERS OF CROWN CLEARANCE ABOVE ADJACENT GROUND LEVEL (TO INFORM ON GROUND CLEARANCE, CROWN/STEM RATIO AND SHADING)
STEM DIA/MULTI-STEM DIA:	STEM DIAMETER - MEASURED AT APPROXIMATELY 1.5 METRES ABOVE GROUND LEVEL OR A COMBINATION OF STEMS FOR MULTI-STEMMED TREES
VITALITY:	A MEASURE OF PHYSIOLOGICAL CONDITION. D = DEAD, MD = MORIBUND, P = POOR, M = MODERATE, G = GOOD
E.R.C. = ESTIMATED REMAINING CONTRIBUTION:	RELATIVE USEFUL LIFE EXPECTANCY (YEARS)
BS 5837CATEGORY & SUB-CATEGORY GRADING:	A = HIGH QUALITY AND VALUE, B = MODERATE QUALITY AND VALUE, C = LOW QUALITY AND VALUE, U = UNSUITABLE FOR RETENTION (SUB-CATEGORY REFERS TO ARBORICULTURAL., LANDSCAPE AND CULTURAL/CONSERVATION VALUES)
BS 5837 RADIUS & BS 5837 RPA:	PROTECTIVE DISTANCE - RADIUS FROM THE CENTRE OF THE STEM TO THE LINE OF TREE PROTECTION (CONSTRUCTION EXCLUSION ZONE - CEZ) AND PROTECTIVE BARRIER ROOT PROTECTION AREA - BS 5837 (2012) ANNEX D (THE RECOMMENDATIONS STATE THAT THE RPA SHOULD BE CAPPED AT 707 M^2) NOTE – ALL CALCULATIONS ROUNDED TO NEAREST DECIMAL

TREE SURVEY SCHEDULE (BS5837: 2012) *TREE SOLUTIONS LTD*

SITE:	BRYN Y GROES, GESFORD, WREXHAM
CLIENT:	SG ESTATES
BRIEF:	TREE SURVEY FOR TREE PROTECTION PLAN FOR NEW SITE ACCESS

SURVEYOR:	A. HENDERSON
ASSESSMENT DATE:	07 MAY 2014
VIEWING CONDITIONS:	GOOD
JOB REFERENCE:	14/AIA/WXM/144

TREE NO. T - Tree G - Group H- Hedge	SPECIES (COMMON NAME)	AGE	HEIGHT (m) + CROWN CLEARANCE/ DIRECTION OF GROWTH (N.S.E.W)	RADIAL CROWN SPREAD (m) N	S	E	W	STEM/ MULTI-STEM* DIA.(mm)	VITALITY	COMMENTS	MANAGEMENT	CATEGORY & SUB-CATEGORY GRADING BS 5837	BS 5837 RADIUS (m) RPA (m^2)
T3	Sycamore	M	20 8E	4	5	5	5	740	G	• Ivy clad stem impeding inspection • Mass of scrub growth beneath crown • E.R.C.20+	• No works	A2	8.9 248m²
T4	Beech	M	20 5E	5	5	5	5	630	G	• Ivy clad stem impeding inspection • Prominent tree due to location on site frontage • E.R.C.20+	• No works	A2	7.6 180m²
T5	Elm	M	20 3W	5	5	5	4	810	M/P	• Tip dieback and deadwood in crown • Appears to be suffering decline due to Dutch Elm Disease • E.R.C. <10	• No works	C2	9.7 297m²
T6	Lime	M	16 1N	6	6	5	5	580	M	• Mass of epicormic growth around base of stem impeding inspection • Tree appears in good health and vigour • E.R.C. 20+	• No works	A2	7 152m²

Table 1 **Cascade chart for tree quality assessment**

Category and definition	Criteria (including subcategories where appropriate)			Identification on plan
Trees unsuitable for retention (see Note)				
Category U Those in such a condition that they cannot realistically be retained as living trees in the context of the current land use for longer than 10 years	• Trees that have a serious, irremediable, structural defect, such that their early loss is expected due to collapse, including those that will become unviable after removal of other category U trees (e.g. where, for whatever reason, the loss of companion shelter cannot be mitigated by pruning) • Trees that are dead or are showing signs of significant, immediate, and irreversible overall decline • Trees infected with pathogens of significance to the health and/or safety of other trees nearby, or very low quality trees suppressing adjacent trees of better quality *NOTE Category U trees can have existing or potential conservation value which it might be desirable to preserve; see **4.5.7**.*			See Table 2
	1 Mainly arboricultural qualities	**2 Mainly landscape qualities**	**3 Mainly cultural values, including conservation**	
Trees to be considered for retention				
Category A **Trees of high quality** with an estimated remaining life expectancy of at least 40 years	Trees that are particularly good examples of their species, especially if rare or unusual; or those that are essential components of groups or formal or semi-formal arboricultural features (e.g. the dominant and/or principal trees within an avenue)	Trees, groups or woodlands of particular visual importance as arboricultural and/or landscape features	Trees, groups or woodlands of significant conservation, historical, commemorative or other value (e.g. veteran trees or wood-pasture)	See Table 2
Category B **Trees of moderate quality** with an estimated remaining life expectancy of at least 20 years	Trees that might be included in category A, but are downgraded because of impaired condition (e.g. presence of significant though remediable defects, including unsympathetic past management and storm damage), such that they are unlikely to be suitable for retention for beyond 40 years; or trees lacking the special quality necessary to merit the category A designation	Trees present in numbers, usually growing as groups or woodlands, such that they attract a higher collective rating than they might as individuals; or trees occurring as collectives but situated so as to make little visual contribution to the wider locality	Trees with material conservation or other cultural value	See Table 2
Category C **Trees of low quality** with an estimated remaining life expectancy of at least 10 years, or young trees with a stem diameter below 150 mm	Unremarkable trees of very limited merit or such impaired condition that they do not qualify in higher categories	Trees present in groups or woodlands, but without this conferring on them significantly greater collective landscape value; and/or trees offering low or only temporary/transient landscape benefits	Trees with no material conservation or other cultural value	See Table 2

© The British Standards Institution 2012

© Tree Solutions Ltd 2014

Appendix Two

Tree Protection Plan

Figure 2 Default specification for protective barrier

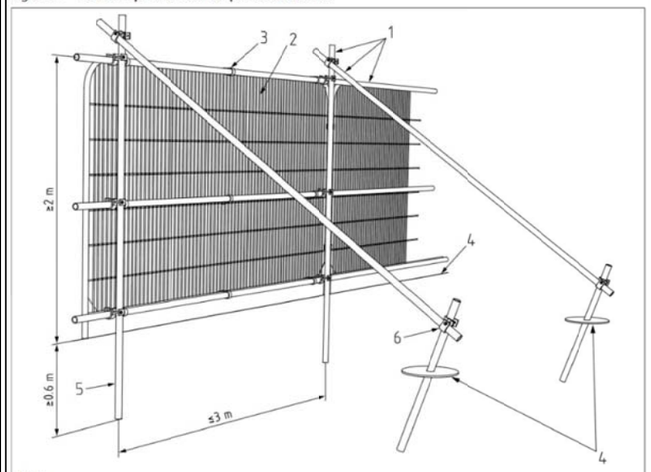

Key

1 Standard scaffold poles
2 Heavy gauge 2 m tall galvanized tube and welded mesh infill panels
3 Panels secured to uprights and cross-members with wire ties
4 Ground level
5 Uprights driven into the ground until secure (minimum depth 0.6 m)
6 Standard scaffold clamps

KEY

ADOPTED HIGHWAY BOUNDARY

SITE BOUNDARY

P/W fence 1mh

STN 30

TYPE C
PLOT59 PLOT
52.600

TYPE D
PLOT1
52.800

N
W
E
S

5m
10m

Legend

Root Protection Area Modified to Account for Site Features

Category
Crown Spread
Tree Number
Root Protection Area

Category A (High Quality)
Category B (Moderate Quality)
Category C (Low Quality)
Category U (Dead/Dying/In Decline)
Tree Protection Fencing

Client: SG Estates	
Project: Access Road - Bryn Y Groes, Gresford	
Title: Tree Protection Plan	
Scale: 1:250 @ A3	Date: May 2014
Drawn By: LI	Revision: -
Job Ref: 14/AMS/WXM/144	Drawing No: 01

Do not scale from this drawing all dimensions to be checked on site.

The copyright of this document resides with Tree Solutions unless assigned in writing by the company

Tree Solutions
E: info@tree-solutions.co.uk
W: www.tree-solutions.co.uk
T: 01244 389114
M: 07766 774508