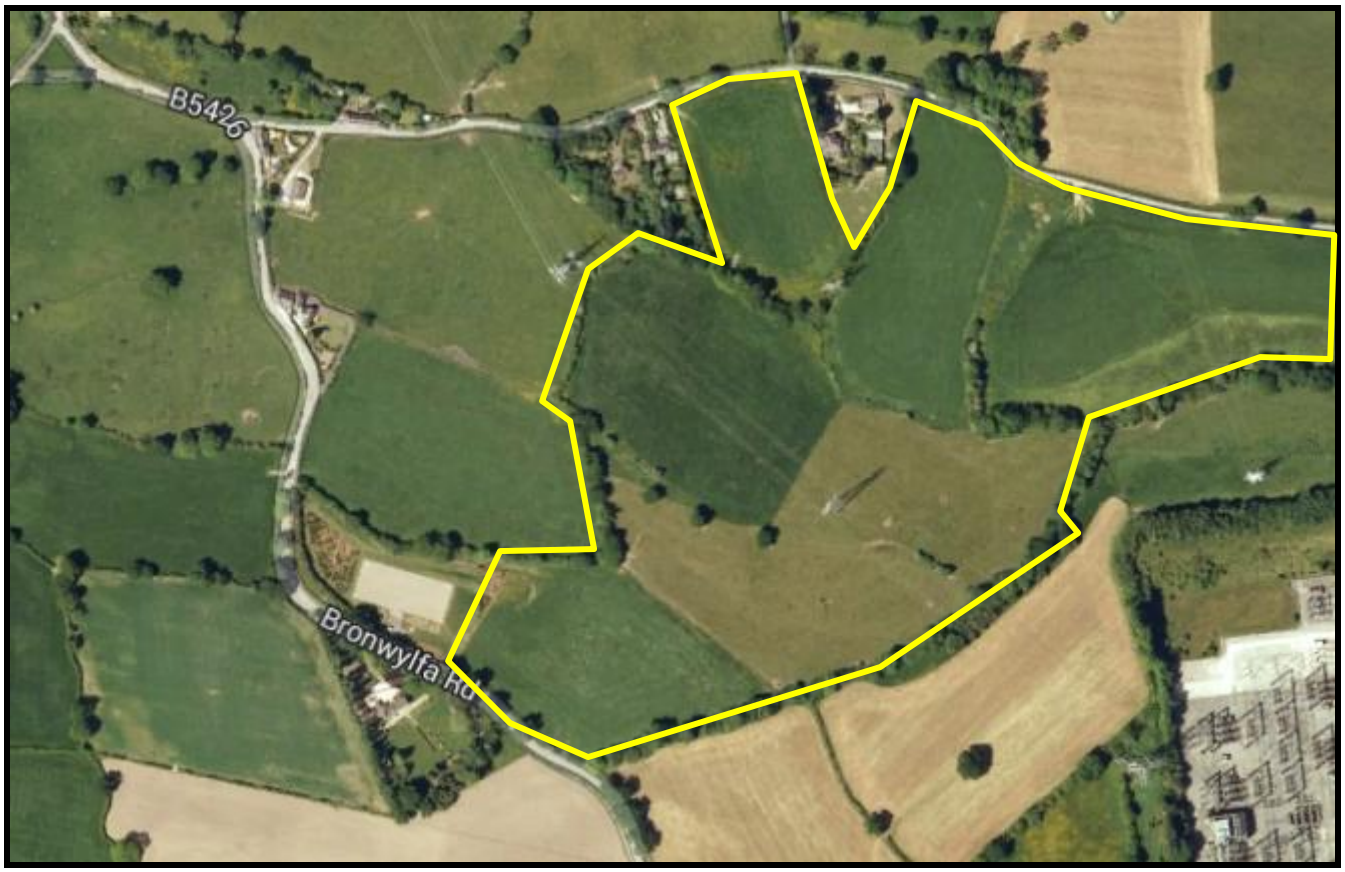

Arboricultural Impact Assessment

Proposed Solar Farm on land at Legacy, Bronwylfa Rd, near Wrexham, LL14 4HY

Prepared for:

WREXHAM COUNTY BOROUGH COUNCIL

Our Ref: 14/AIA/WXM/139

01 April 2014

Tree Solutions Ltd

T: 01244 389114
E: info@tree-solutions.co.uk
W: www.tree-solutions.co.uk

Contents:

1.0 Instruction
2.0 Statutory Controls & Planning Policy
3.0 The Site
4.0 Development Proposal
5.0 General Constraints Data – Construction Exclusion Zones
6.0 Survey Methodology
7.0 Juxtaposition of Trees & Structures
8.0 Demolition/Development Impact to Trees
9.0 Proposed Revisions
10.0 Conclusions
11.0 Limiting Conditions

Appendix 1 Tree Survey Schedule
Appendix 2 Preliminary Tree Constraints Plan
Appendix 3 Arboricultural Impact Plan
Appendix 4 Tree Protection Plan
Appendix 5 Tree Protection Measures/Method Statement

1.0 INSTRUCTIONS

1.1 We have been instructed by Wrexham County Borough Council to carry out an Arboricultural Impact Assessment (AIA) in order to assess the development proposal in relation to trees in accordance with the principles of British Standard 5837 'Trees in Relation to Design, Demolition & Construction - Recommendations' 2012.

1.2 We are instructed to prepare a report in order to provide information to assist all parties involved in the planning process to make balanced judgements with regard to arboricultural features in relation to the proposed Solar Farm on land at Legacy, Bronwylfa Rd, near Wrexham, LL14 4HY As such, all significant trees within influencing distance to the development proposal both on and adjoining the site have been surveyed and are listed within a Tree Survey Schedule (***Appendix 1***) and plotted on all accompanying plans.

1.3 The phase 1 tree survey was carried out on 23 March 2014 by Alistair Henderson, Principal Consultant to Tree Solutions Ltd. Our appraisal of the mechanical integrity of trees on the site is sufficient only to inform the current project. The assessment of trees is carried out from ground level without invasive investigation and the disclosure of hidden defects cannot therefore be expected. Whilst the survey is not specifically commissioned to report on matters of tree safety, we report obvious defects that are significant in relation to the existing and proposed land use. We do not carry out detailed safety inspections unless specifically instructed to do so in writing and have not carried out such inspections of trees on the proposal site.

1.4 Fifty seven individual trees (T1 – T57), six groups (G1-G6) were surveyed and mapped on a preliminary Tree Constraints Plan and an Impact Assessment Plan Ref: 14/AIA/WXM/139 Drawing Nos. 1 & 2 at ***Appendix 2/3***. All arboricultural information recorded during the survey is presented within a schedule at ***Appendix 1***.

1.5 The Arboricultural Impact Assessment is based on proposed site layout plan Ref: R3.0 dated 31/03/2014 provided by Novus Solar Development.

2.0 STATUTORY CONTROLS & PLANNING POLICY

2.1 In terms of impacts on trees, the planning application will be assessed against Policy EC4 of the Wrexham County Borough Council Unitary Development Plan (2005) and Local Planning Guidance Note 17 'Trees & Development' (2010).

2.1.2 All trees surveyed are subject to Wrexham Maelor Borough Council, Tree Preservation Order No 2 (1975)

2.2 Protected Species

2.2.1 Mature trees often contain cavities, crevices and hollows that offer potential habitat for species such as bats and barn owls. Both are afforded protection under the Schedule 5 of the Wildlife and Countryside Act 1981 (as amended), as well as The Conservation (Natural Habitats, &c) (Amendment) Regulations 2007.

2.3 Wildlife Habitats

2.3.1 Trees and hedgerows of most species provide valuable nesting sites for a wide range of birds and it is likely that nesting birds will be present on the site during the period March to September.

3.0 THE SITE

3.1 The site is agricultural land with mature trees located around the boundaries within established hedgerows.

 © Tree Solutions Ltd (2014)

4.0 DEVELOPMENT PROPOSAL

4.1 Solar Farm.

5.0 GENERAL CONSTRAINTS DATA - CONSTRUCTION EXCLUSION ZONES (CEZ's)

5.1 GENERAL

5.1.1 The three phases of an AIA were outlined in Section 1. In addition, during the development process for retention trees, there may be three and even four constraints to consider: Construction Exclusion Zone (CEZ's):

- CEZ 1: Root Protection Area (see 5.2)
- CEZ 2: Tree Crown Protection (see 5.3)
- CEZ 3: Tree Dominance (see 5.4)
- CEZ 4: New Tree Planting Zone (see 5.5)

CEZ's are explained below:

5.2 CEZ 1: ROOT PROTECTION AREA (RPA)

5.2.1 The RPA, calculated in m2, should be protected before and during any demolition/construction works. This ensures the effective retention of trees by safeguarding a reliable quantum of functioning tree roots. The RPA is based on a radial measure from the centre of the tree stem, which is calculated by multiplying the stem diameter by a factor of twelve or by the $\sqrt{(\text{mean stem diameter}^2)} \times \text{number of stems}$ for multi-stemmed trees. With the AIA 1, the RPA is only shown indicatively on the preliminary TCP, as its shape may be subject to amendment as the design progresses.

5.2.2 During the AIA 2, the derived radial measure is converted by the arboriculturalist into the actual area to be protected, having due regard to prevailing site conditions and how these may have affected the tree(s), particularly in relation to factors affecting their likely rooting disposition. The RPA for each tree should initially be plotted as a circle centred on the base of the stem. Where pre-existing site conditions or other factors indicate that rooting has occurred asymmetrically, a polygon of equivalent area should be produced. Modifications to the shape of the RPA should reflect a soundly based arboricultural assessment of likely root distribution.

5.2.3 The means of protecting the RPA will include the installation of tree protective fencing prior to the start of any demolition or construction work on site. The prohibition of various activities within the RPA must be adhered to (e.g. mechanical excavation, soil stripping, fire lighting, material storage, lowering levels and creating excessive sealed surfacing) and may include the use of temporary ground protection and/or special engineering solutions where construction is proposed near to retention trees or within the RPA.

5.3 CEZ 2: TREE CROWN PROTECTION ZONE

5.3.1 This is the area above ground occupied by the crown (branches) of the tree, along with allowances for working space (safe working area) and if appropriate, for future growth. The extent of CEZ 2 is determined by considering the existing and future crown spread of the tree(s), bearing in mind the possibility of this being modified by an acceptable quantum of pruning.

5.4 CEZ 3: TREE DOMINANCE ZONE

5.4.1 This is the area above ground dominated by the tree in relation to issues of shading, seasonal debris and safety apprehension. This area is calculated by considering the height and spread of the tree relative to the proposed buildings, cross referenced with intended end use. As such, what is assessed is the likely psychological effect of the tree on the end user.

 © Tree Solutions Ltd (2014)

5.4.2 The purpose of identifying CEZ 3 is to protect trees from post development pressure (resentment) by the site's end users, who may, if resentful of the trees, seek to procure excessive pruning treatments or even to have them removed. This is a common Planning Service concern, which has led on many occasions both to refusals of consent and to dismissed Appeals against those refusals.

5.4.3 The means of protecting CEZ 3 is likely to include optimising the site layout and room type (especially in relation to new residential dwellings), such that any adverse psychological impacts of the trees are reduced to an acceptable minimum. Key principles include ensuring adequate separation distances between trees and new buildings, in the context of the buildings' end use relative to the location of the tree(s) and avoiding excessive obstruction by trees of critical solar access.

5.5 CEZ 4: NEW PLANTING ZONE

5.5.1 In some cases, it may be appropriate to identify and protect areas intended for new landscape planting, which can fail to establish if the soil has been heavily compacted or contaminated during the demolition/construction process. The means of protecting CEZ 4 will either be by fencing it off prior to the start of works on site, or by soil remediation once construction has finished (and prior to the start of planting). Topsoil protection in areas destined for new planting is frequently an economy measure, saving on plant replacement and soil structure remediation.

6.0 SURVEY METHODOLOGY

6.1 The method used in the preparation of this report is based on the principles of BS 5837: 2012.

1. Tree heights were surveyed to the nearest 1m.

2. Trunk diameters were measured by use of forestry girth tape

3. The category assessment (Table 1) on which the trees is based include current and long-term arboricultural, landscape, cultural and conservation values (BS5837: 2012). This table can be found at ***Appendix 1***

4. For clarity, the grading system is summarised from ***Table 2*** of the BS as follows:

   U grade – trees for removal, effective for less than 10 years

   A grade – trees of high quality and value, effective for more than 40 years

   B grade – trees of moderate quality and value, effective for more than 20 years

   C grade – trees of low quality and value, effective for 10 years

   Note: We have indicated colour coding on the drawing and therefore a monochrome copy should not be relied on.

6.2 SOIL ASSESSMENT

6.2.1 A soil assessment should be undertaken by a competent person to inform decisions relating to:

- the root protection area (RPA)
- tree protection
- new planting design; and
- foundation design to take account of retained, removed and new trees (potential soil subsidence/heave)

Tree Solutions do not undertake soil assessments and the client is advised to seek specialist advice in this respect.

 © Tree Solutions Ltd (2014)

7.0 JUXTAPOSITION OF TREES AND DEVELOPMENT

7.1 Below ground constraints

7.1.1 The below ground constraints are generally summarised as the root protection area (RPA). The shape of the RPA and its exact location will depend upon arboricultural considerations including likely tolerance of the tree to root disturbance; morphology and disposition of the roots when known influenced by past or existing site conditions; soil type and structure; and topography and drainage.

7.1.2 The purpose of the RPA is to prevent physical damage to tree roots and to prevent damage to the soil structure. Tree roots are damaged by soil compaction, changes in soil levels or soil contamination which could reduce tree health and/or stability.

7.1.3 Root patterns are affected by topography and characteristics of the soil or substrate. Where trees are located within close proximity to existing hard standing or underground physical barriers they are unlikely to have an even distribution of lateral roots due to restrictions in root growth created by compacted sub-grades beneath. The RPA of tree numbers 38-40 have been modified due to their proximity to Bronwylfa Road to their west as roots are unlikely to be present within the heavily compacted sub-grade beneath. As such they have been plotted running 1.5m within the road and extending further within the site to the east where a more favourable rooting environment exists. All other RPA's have been plotted unmodified.

7.2 Underground Services

7.2.1 We have considered the broad implications of the provision of underground services but the locations of existing and proposed were not identified on the plans supplied by the Project Architect and in this regard, our advice is of a general nature.

7.2.2 Drainage and service runs may need to be constructed within the rooting areas of retained trees. If this is a requirement of the development it will be necessary to retain significant roots and methods of excavation, such as thrust boring or hand digging, may need to be adopted to ensure that these impacts are acceptable.

7.2.3 As with foundation design, low impact construction methods for services installation are now well established. For more information regarding underground services, reference should be made to the National Joint Utilities Group (NJUG) Publication No. 10. Volume 4 *'Guidelines for the Planning, Installation and Maintenance of Utility Services in Proximity to Trees' 2007*

8.0 DEVELOPMENT IMPACT TO TREES

8.1 In order to accommodate the proposed development no trees require to be removed and all infrastructure has been positioned at an appropriate separation distance from retained trees such that no future conflicts will arise.

8.2 As requested by WCBC Tree Officer a daylight shading profile has been plotted on the Impact Assessment Plan at ***Appendix 3***. The mature tree heights/spreads of all trees were increased by 2m in order to allow for the potential increased growth during the lifetime of the project circa 35 years. As most tree surveyed are mature/fully mature, these increased heights are unlikely to be exceeded. This information was recorded on the preliminary Tree Constraints Plan and issued to the Novus Solar Development prior to the final layout being agreed. As a result, the solar units have been located well outside any potential shade areas to allow for both summer and winter light conditions.

8.3 The proposed temporary site access and compound area have been located outside the RPA of all adjacent trees and well clear of their canopy in order to ensure no adverse impact during site deliveries and storage.

 © Tree Solutions Ltd (2014)

9.0 PROPOSED REVISIONS TO THE SCHEME

9.1 We advise that all proposed revisions having implications for trees should be referred to us for review.

10.0 CONCLUSIONS

10.1 BS 5837: 2012 contains clear and current recommendations for a best practice approach to the assessment, retention and protection of trees on development sites. The proposed development has followed this guidance by:

- Seeking arboricultural advice and undertaking a phase 1 preliminary tree survey in order to inform the layout and design of the proposed development
- Respecting the constraints posed to development of the site by high or moderate quality trees
- Acting upon arboricultural advice throughout the design process in order to obtain the best development proposal whilst considering the current and future tree requirements

11.0 LIMITING CONDITIONS

Unless stated otherwise:

Information contained in this report covers only those trees that were examined and reflects the condition of those trees at the time of the inspection.

The inspection is limited to visual examination of the subject trees from ground level only and without dissection, excavation, probing or coring. There is no warranty or guarantee, expressed or implied, that problems or deficiencies of the subject trees may not arise in the future.

This report has been prepared for the sole use and benefit of the client. Any liability of Tree Solutions shall not be extended to any third party.

No part of this report can be reproduced without the authorisation of *Tree Solutions Ltd*.

Appendix One

Tree Survey Schedule

© Tree Solutions Ltd (2014)

TREE SURVEY SCHEDULE (BS5837: 2012)

TREE SOLUTIONS LTD

SITE:	PROPOSED SOLAR FARM, LEGACY, BRONWYLFA ROAD, WREXHAM
CLIENT:	WREXHAM COUNTY BOROUGH COUNCIL
BRIEF:	ARBORICULTURAL IMPACT ASSESSMENT

SURVEYOR:	A. HENDERSON
ASSESSMENT DATE:	23 MARCH 2014
VIEWING CONDITIONS:	GOOD
JOB REFERENCE:	14/AIA/WXM/139

TREE NO. T - Tree G - Group H- Hedge	SPECIES (COMMON NAME)	AGE	HEIGHT (m) + CROWN CLEARANCE/ DIRECTION OF GROWTH (N.S.E.W)	RADIAL CROWN SPREAD (m) N	S	E	W	STEM/ MULTI-STEM* DIA.(mm)	VITALITY	COMMENTS	MANAGEMENT	CATEGORY & SUB-CATEGORY GRADING BS 5837	BS 5837 RADIUS (m) RPA (m^2)
T1	Ash	M	17 4N	5	5	5	5	610	G	• No significant defects • E.R.C. 20+	• N/A	B2	7.3 168m²
T2	Sycamore	M	16 3N	4	2	4.5	4	640	M	• Large diameter dead wood in crown • Decayed stem from 2m • E.R.C. 10	• N/A	B2	7.7 185m²
T3	Oak	M	15 1N	5	5	4	6	540	G	• Good quality tree • No significant defects • E.R.C. 40+	• N/A	A2	6.5 132m²
T4	Oak	M	16 4E	7	8	9	8	800	G	• No significant defects • Good quality prominent tree • E.R.C. 40+	• N/A	A2	9.6 290m²
T5	Sycamore	M	13 3S	4	4	4	4	540	G	• Root severance/damage at base • E.R.C. 10	• N/A	C2	6.5 132m²

HEADINGS & ABBREVIATIONS

TREE NO.	REFERENCE NUMBER. REFER TO PLAN OR NUMBERED TAGS WHERE APPLICABLE (T = TREE, G = GROUP, H = HEDGE)
SPECIES:	COMMON NAME (LATIN NAMES AVAILABLE ON REQUEST)
AGE RANGE/LIFE STAGE:	Y = YOUNG, SM = SEMI MATURE, EM = EARLY MATURE, M = MATURE, PM = POST MATURE
HEIGHT:	ESTIMATED AND RECORDED IN METRES. APPROXIMATELY 1 IN 10 TREES ARE MEASURED USING A CLINOMETER AND THE REMAINDER ESTIMATED AGAINST THE MEASURED TREES
CROWN SPREAD:	MAXIMUM CROWN RADIUS MEASURED TO THE FOUR CARDINAL COMPASS POINTS FOR SINGLE SPECIMENS ONLY (MEASUREMENT FOR TREE GROUPS - MAXIMUM RADIUS OF THE GROUP)
CROWN CLEARANCE & DIRECTION OF GROWTH:	HEIGHT IN METERS OF CROWN CLEARANCE ABOVE ADJACENT GROUND LEVEL (TO INFORM ON GROUND CLEARANCE, CROWN/STEM RATIO AND SHADING)
STEM DIA/MULTI-STEM DIA:	STEM DIAMETER - MEASURED AT APPROXIMATELY 1.5 METRES ABOVE GROUND LEVEL OR A COMBINATION OF STEMS FOR MULTI-STEMMED TREES
VITALITY:	A MEASURE OF PHYSIOLOGICAL CONDITION. D = DEAD, MD = MORIBUND, P = POOR, M = MODERATE, G = GOOD
E.R.C. = ESTIMATED REMAINING CONTRIBUTION:	RELATIVE USEFUL LIFE EXPECTANCY (YEARS)
BS 5837CATEGORY & SUB-CATEGORY GRADING:	A = HIGH QUALITY AND VALUE, B = MODERATE QUALITY AND VALUE, C = LOW QUALITY AND VALUE, U = UNSUITABLE FOR RETENTION (SUB-CATEGORY REFERS TO ARBORICULTURAL., LANDSCAPE AND CULTURAL/CONSERVATION VALUES)
BS 5837 RADIUS & BS 5837 RPA:	PROTECTIVE DISTANCE - RADIUS FROM THE CENTRE OF THE STEM TO THE LINE OF TREE PROTECTION (CONSTRUCTION EXCLUSION ZONE - CEZ) AND PROTECTIVE BARRIER ROOT PROTECTION AREA - BS 5837 (2012) ANNEX D (THE RECOMMENDATIONS STATE THAT THE RPA SHOULD BE CAPPED AT 707 M^2) NOTE – ALL CALCULATIONS ROUNDED TO NEAREST DECIMAL

TREE SURVEY SCHEDULE (BS5837: 2012)

TREE SOLUTIONS LTD

SITE:	PROPOSED SOLAR FARM, LEGACY, BRONWYLFA ROAD, WREXHAM
CLIENT:	WREXHAM COUNTY BOROUGH COUNCIL
BRIEF:	ARBORICULTURAL IMPACT ASSESSMENT

SURVEYOR:	A. HENDERSON
ASSESSMENT DATE:	23 MARCH 2014
VIEWING CONDITIONS:	GOOD
JOB REFERENCE:	14/AIA/WXM/139

TREE NO. T - Tree G - Group H- Hedge	SPECIES (COMMON NAME)	AGE	HEIGHT (m) + CROWN CLEARANCE/ DIRECTION OF GROWTH (N.S.E.W)	RADIAL CROWN SPREAD (m) N	S	E	W	STEM/ MULTI-STEM* DIA.(mm)	VITALITY	COMMENTS	MANAGEMENT	CATEGORY & SUB-CATEGORY GRADING BS 5837	BS 5837 RADIUS (m) RPA (m^2)
T6	Oak	M	11 2E	5	4	4.5	4.5	200 x 5 (447)	G	• 5 stems from past coppice - all recorded to give combined diameter • On embankment to stream • E.R.C.20+	• N/A	B2	5.4 90m²
T7	Alder	M	16 2N	5	5	5	5	580	G	• No significant defects • E.R.C. 20+	• N/A	B2	7 152m²
T8	Oak	FM	14 4W	4	3	5	6	810	M	• Top failed at 5m leaving stump with two side limbs - good biodiversity value • E.R.C. 20+	• N/A	B2	9.7 297m²
T9	Oak	FM	17 5S	8	8	7	7	820	G	• Good quality prominent tree • No significant defects • E.R.C. 20+	• N/A	A2	9.8 304m²
T10	Oak	M	15 5S	1	4	1	2	410	M	• Suppressed crown form • E.R.C. 20+	• N/A	B2	4.9 76m²
T11	Sycamore	M	16 4N	4	4	5	2	430	M	• No significant defects • E.R.C. 20	• N/A	B2	5.2 84m²
T12	Oak	M	16 4S	4	5	5	5	540	M	• Tip dieback in crown • E.R.C. 20	• N/A	B2	6.5 132m²

TREE SURVEY SCHEDULE (BS5837: 2012)

TREE SOLUTIONS LTD

SITE:	PROPOSED SOLAR FARM, LEGACY, BRONWYLFA ROAD, WREXHAM
CLIENT:	WREXHAM COUNTY BOROUGH COUNCIL
BRIEF:	ARBORICULTURAL IMPACT ASSESSMENT

SURVEYOR:	A. HENDERSON
ASSESSMENT DATE:	23 MARCH 2014
VIEWING CONDITIONS:	GOOD
JOB REFERENCE:	14/AIA/WXM/139

TREE NO. T - Tree G - Group H- Hedge	SPECIES (COMMON NAME)	AGE	HEIGHT (m) + CROWN CLEARANCE/ DIRECTION OF GROWTH (N.S.E.W)	RADIAL CROWN SPREAD (m) N	S	E	W	STEM/ MULTI-STEM* DIA.(mm)	VITALITY	COMMENTS	MANAGEMENT	CATEGORY & SUB-CATEGORY GRADING BS 5837	BS 5837 RADIUS (m) RPA (m^2)
T13	Oak	M	16 1S	5	4	3	3.5	560	G	• Root decay & damage to east as a result of bridge construction • E.R.C. 20	• N/A	B2	6.7 142m²
T14	Oak	M	16 1N	6	4	5	4	540	G	• Dieback at top of crown (stag headed) • E.R.C. 20	• N/A	B2	6.5 132m²
T15	Oak	M	16 2W	5	5	5	5	620	G	• No significant defects • E.R.C. 40	• N/A	A2	6.4 174m²
T16	Oak	M	16 8S	5	3	3	1	410	G	• No significant defects • E.R.C. 20+	• N/A	B2	4.9 76m²
T17	Oak	M	17 3S	6	6	5	5	520	G	• No significant defects • E.R.C. 20+	• N/A	B2	6.2 122m²
T18	Oak	M	16 4N	7	6	5	4	600	G	• No significant defects • E.R.C. 20+	• N/A	B2	7.2 163m²
T19	Ash	FM	16 7W	5	6	7	7	700	P	• Significant stem decay • In decline - • E.R.C. <10	• Pollard & retain for biodiversity	C2	8.4 222m²
T20	Beech	EM	12 1W	2	3	3	3	310	M	• Small tree with no defects • E.R.C. 20+	• N/A	B2	3.7 43m²

TREE SURVEY SCHEDULE (BS5837: 2012)

TREE SOLUTIONS LTD

SITE:	PROPOSED SOLAR FARM, LEGACY, BRONWYLFA ROAD, WREXHAM
CLIENT:	WREXHAM COUNTY BOROUGH COUNCIL
BRIEF:	ARBORICULTURAL IMPACT ASSESSMENT

SURVEYOR:	A. HENDERSON
ASSESSMENT DATE:	23 MARCH 2014
VIEWING CONDITIONS:	GOOD
JOB REFERENCE:	14/AIA/WXM/139

TREE NO. T - Tree G - Group H- Hedge	SPECIES (COMMON NAME)	AGE	HEIGHT (m) + CROWN CLEARANCE/ DIRECTION OF GROWTH (N.S.E.W)	RADIAL CROWN SPREAD (m) N	S	E	W	STEM/ MULTI-STEM* DIA.(mm)	VITALITY	COMMENTS	MANAGEMENT	CATEGORY & SUB-CATEGORY GRADING BS 5837	BS 5837 RADIUS (m) RPA (m^2)
T21	Oak	M	8 1W	3	2	3	5	460	P	• Large diameter dead wood in crown • Low stunted form - in decline • E.R.C. 10	• N/A	C2	5.5 96m²
T22	Oak	M	14 1W	5	7	5	7	640	G	• No significant defects • E.R.C. 20+	• N/A	B2	7.7 185m²
T23	Oak	M	15 2N	6	3	5	7	600	G	• No significant defects • E.R.C. 40	• N/A	A2	7.2 163m²
T24	Oak	M	17 1S	4	5	6	6	510	G	• No significant defects • E.R.C. 40	• N/A	A2	6.1 118m²
T25	Oak	M	15 3E	4	5	5	6	590	G	• No significant defects • E.R.C. 40	• N/A	A2	7.1 157m²
T26	Oak	M	15 2W	5	5	4	6	420	G	• No significant defects • E.R.C. 40	• N/A	A2	5 80m²
T27	Oak									• In advanced decline • E.R.C. 0	• Prune to leave at 10m monolith pole	U	N/A

TREE SURVEY SCHEDULE (BS5837: 2012)

TREE SOLUTIONS LTD

SITE:	PROPOSED SOLAR FARM, LEGACY, BRONWYLFA ROAD, WREXHAM
CLIENT:	WREXHAM COUNTY BOROUGH COUNCIL
BRIEF:	ARBORICULTURAL IMPACT ASSESSMENT

SURVEYOR:	A. HENDERSON
ASSESSMENT DATE:	23 MARCH 2014
VIEWING CONDITIONS:	GOOD
JOB REFERENCE:	14/AIA/WXM/139

TREE NO. T - Tree G - Group H- Hedge	SPECIES (COMMON NAME)	AGE	HEIGHT (m) + CROWN CLEARANCE/ DIRECTION OF GROWTH (N.S.E.W)	RADIAL CROWN SPREAD (m) N	S	E	W	STEM/ MULTI-STEM* DIA.(mm)	VITALITY	COMMENTS	MANAGEMENT	CATEGORY & SUB-CATEGORY GRADING BS 5837	BS 5837 RADIUS (m) RPA (m^2)
T28	Oak	M	17 3E	5	6	5	6	620	G	• No significant defects • E.R.C. 40	• N/A	A2	7.4 174m²
T29	Oak	M	15 1S	7	6	6	6	640	G	• No significant defects • E.R.C. 40	• N/A	A2	7.7 185m²
T30	Oak	M	16 1N	5	5	5	5	600	G	• No significant defects • E.R.C. 40	• N/A	A2	7.2 163m²
T31	Oak	M	16 1S	4	4	4	4	580	G	• No significant defects • E.R.C. 40	• N/A	A2	7 152m²
T32	Oak	M	14 1E	5	5	5	5	590	G	• No significant defects • E.R.C. 40	• N/A	A2	7.1 157m²
T33	Oak	M	9 1N	5	5	5	5	600	G	• No significant defects • E.R.C. 40	• N/A	A2	7.2 163m²
T34	Sycamore	M	16 1N	5	4	5	4	570	M	• Co-dominant stems from base - included union • E.R.C. 20	• N/A	B2	6.8 147m²

TREE SURVEY SCHEDULE (BS5837: 2012)

TREE SOLUTIONS LTD

SITE:	PROPOSED SOLAR FARM, LEGACY, BRONWYLFA ROAD, WREXHAM
CLIENT:	WREXHAM COUNTY BOROUGH COUNCIL
BRIEF:	ARBORICULTURAL IMPACT ASSESSMENT

SURVEYOR:	A. HENDERSON
ASSESSMENT DATE:	23 MARCH 2014
VIEWING CONDITIONS:	GOOD
JOB REFERENCE:	14/AIA/WXM/139

TREE NO. T - Tree G - Group H- Hedge	SPECIES (COMMON NAME)	AGE	HEIGHT (m) + CROWN CLEARANCE/ DIRECTION OF GROWTH (N.S.E.W)	RADIAL CROWN SPREAD (m) N	S	E	W	STEM/ MULTI-STEM* DIA.(mm)	VITALITY	COMMENTS	MANAGEMENT	CATEGORY & SUB-CATEGORY GRADING BS 5837	BS 5837 RADIUS (m) RPA (m^2)
T35	Oak	FM	17 1S	6	7	8	7	900	G	• Good quality prominent tree • No visual defects • E.R.C. 40+	• N/A	A2	11 366m²
T36	Oak	FM	18 2S	7	6	7	6	820	G	• Epicormic growth in inner crown • Tip dieback • E.R.C. 20+	• N/A	A2	9.4 304m²
T37	Oak	FM	16 2S	5	6	6	6	680	G	• Good quality prominent tree • No visual defects • E.R.C. 40+	• N/A	A2	8.2 209m²
T38	Oak	FM	19 2E	6	6	5	7	700	G	• Ivy clad stem impeding inspection • Road to west - RPA modified to reflect • E.R.C. 40	• N/A	A2	8.4 222m²
T39	Oak	FM	19 4E	5	5	6	6	600	G	• As T38	• N/A	A2	7.2 163m²
T40	Oak	FM	18 1W	6	6	5	9	700	G	• As T38	• N/A	A2	8.4 222m²
T41	Ash	M	17 3N	5	6	5	5	600	G	• Edge tree to group • E.R.C. 20+	• N/A	A2	7.2 222m²

TREE SURVEY SCHEDULE (BS5837: 2012)

TREE SOLUTIONS LTD

SITE:	PROPOSED SOLAR FARM, LEGACY, BRONWYLFA ROAD, WREXHAM
CLIENT:	WREXHAM COUNTY BOROUGH COUNCIL
BRIEF:	ARBORICULTURAL IMPACT ASSESSMENT

SURVEYOR:	A. HENDERSON
ASSESSMENT DATE:	23 MARCH 2014
VIEWING CONDITIONS:	GOOD
JOB REFERENCE:	14/AIA/WXM/139

TREE NO. T - Tree G - Group H- Hedge	SPECIES (COMMON NAME)	AGE	HEIGHT (m) + CROWN CLEARANCE/ DIRECTION OF GROWTH (N.S.E.W)	RADIAL CROWN SPREAD (m) N	S	E	W	STEM/ MULTI-STEM* DIA.(mm)	VITALITY	COMMENTS	MANAGEMENT	CATEGORY & SUB-CATEGORY GRADING BS 5837	BS 5837 RADIUS (m) RPA (m^2)
T42	Oak	FM	13 4N	4	4	5	5	600	G	• No visual defects • E.R.C. 40+	• N/A	A2	7.2 222m²
T43	Ash	EM	16 4N	3	4	5	5	440	G	• Pruned to north to clear adjacent power line • E.R.C. 20+	• N/A	B2	5.3 88m²
T44	Oak	M	17 2N	5	5	5	5	500	G	• Recent storm damage to lower crown north • Good quality tree • E.R.C. 40+	• N/A	A2	6 113m²
T45	Ash	M	10 2N	4	5	4	4	400	G	• No visual defects • E.R.C. 20	• N/A	B2	4.8 72m²
T46	Ash	EM	12 1N	4	4	3	3	380	M	• No visual defects • E.R.C. 20	• N/A	B2	4.6 65m²
T47	Oak	M	16 3N	5	5	5	5	460	G	• No visual defects • E.R.C. 40	• N/A	A2	5.5 96m²
T48	Oak	EM	15 5S	4	4.5	4	4	380	G	• No visual defects • E.R.C. 40	• N/A	B2	4.6 65m²
T49	Oak	M	17 5E	5	5	7	3	580	G	• No visual defects • Ivy clad • E.R.C. 40	• N/A	A2	7 152m²

TREE SURVEY SCHEDULE (BS5837: 2012)

TREE SOLUTIONS LTD

SITE:	PROPOSED SOLAR FARM, LEGACY, BRONWYLFA ROAD, WREXHAM
CLIENT:	WREXHAM COUNTY BOROUGH COUNCIL
BRIEF:	ARBORICULTURAL IMPACT ASSESSMENT

SURVEYOR:	A. HENDERSON
ASSESSMENT DATE:	23 MARCH 2014
VIEWING CONDITIONS:	GOOD
JOB REFERENCE:	14/AIA/WXM/139

TREE NO. T - Tree G - Group H- Hedge	SPECIES (COMMON NAME)	AGE	HEIGHT (m) + CROWN CLEARANCE/ DIRECTION OF GROWTH (N.S.E.W)	RADIAL CROWN SPREAD (m) N	S	E	W	STEM/ MULTI-STEM* DIA.(mm)	VITALITY	COMMENTS	MANAGEMENT	CATEGORY & SUB-CATEGORY GRADING BS 5837	BS 5837 RADIUS (m) RPA (m^2)
T50	Oak	M	16 4S	6	6	4	6	550	G	• No visual defects • E.R.C. 40+	• N/A	A2	6.6 137m²
T51	Oak	M	16 4S	5	5	4	4	580	G	• Dead wood & past crown failure • E.R.C. 40+	• N/A	A2	7 152m²
T52	Oak	M	17 2N	5	6	5	5	560	G	• No visual defects • E.R.C. 40	• N/A	A2	6.7 142m²
T53	Sycamore	EM	14 1W	3	4	3	4	360	G	• No visual defects • E.R.C. 40	• N/A	B2	4.3 59m²
T54	Oak	EM	15 5W	2	4	4	4	400	G	• No visual defects • E.R.C. 20	• N/A	B2	4.8 72m²
T55	Sycamore	EM	14 2W	4	5	5	4	380	G	• No visual defects • E.R.C. 40	• N/A	B2	4.6 65m²
T56	Oak	FM	17 3S	4	5	5	5	670	G	• No visual defects • E.R.C. 40	• N/A	A2	8 203m²
T57	Oak	FM	17 1N	4	7	5	5	600	G	• No visual defects • E.R.C. 40	• N/A	A2	7.2 163m²

TREE SURVEY SCHEDULE (BS5837: 2012)

TREE SOLUTIONS LTD

SITE:	PROPOSED SOLAR FARM, LEGACY, BRONWYLFA ROAD, WREXHAM
CLIENT:	WREXHAM COUNTY BOROUGH COUNCIL
BRIEF:	ARBORICULTURAL IMPACT ASSESSMENT

SURVEYOR:	A. HENDERSON
ASSESSMENT DATE:	23 MARCH 2014
VIEWING CONDITIONS:	GOOD
JOB REFERENCE:	14/AIA/WXM/139

TREE NO. T - Tree G - Group H- Hedge	SPECIES (COMMON NAME)	AGE	HEIGHT (m) + CROWN CLEARANCE/ DIRECTION OF GROWTH (N.S.E.W)	RADIAL CROWN SPREAD (m) N	S	E	W	STEM/ MULTI-STEM* DIA.(mm)	VITALITY	COMMENTS	MANAGEMENT	CATEGORY & SUB-CATEGORY GRADING BS 5837	BS 5837 RADIUS (m) RPA (m^2)
G1	Cherry	EM /M	≤15 1N	7	5	4	4	≤400	G	• Small group of insignificant trees • E.R.C. 20+	• N/A	B2	4.8 72m²
G2	Birch Mountain Ash	Y	≤8					≤100	G	• Recently planted group of trees on southern embankment to reservoir • E.R.C. 20+	• N/A	B2	1.2 5m²
G3	Willow Hazel Holly Oak	EM /M	≤10					≤220	G	• Hedgerow along boundary fence interspersed with Oak natural regeneration • Willow located to north on embankment to stream • E.R.C. 20+	• N/A	B2	2.6 22m²
G4	Ash Oak Holly Sycamore Alder	M	≤17 4N					≤580	M/G	• Linear wooded strip on either side of watercourse • Prominent landscape feature • E.R.C. 20+	• N/A	A2	7 152m²
G5	Hawthorn Alder	M	≤10					≤300	G	• Overgrown unmanaged hedgerow • E.R.C. 20+	• N/A	B2	3.6 41m²
G6	Holly Hawthorn	M	≤6					≤200	G	• Overgrown unmanaged hedgerow • E.R.C. 20+	• N/A	B2	2.4 18m²

Table 1 **Cascade chart for tree quality assessment**

Category and definition	Criteria (including subcategories where appropriate)			Identification on plan
Trees unsuitable for retention (see Note)				
Category U Those in such a condition that they cannot realistically be retained as living trees in the context of the current land use for longer than 10 years	• Trees that have a serious, irremediable, structural defect, such that their early loss is expected due to collapse, including those that will become unviable after removal of other category U trees (e.g. where, for whatever reason, the loss of companion shelter cannot be mitigated by pruning) • Trees that are dead or are showing signs of significant, immediate, and irreversible overall decline • Trees infected with pathogens of significance to the health and/or safety of other trees nearby, or very low quality trees suppressing adjacent trees of better quality *NOTE Category U trees can have existing or potential conservation value which it might be desirable to preserve; see **4.5.7**.*			See Table 2
	1 Mainly arboricultural qualities	**2 Mainly landscape qualities**	**3 Mainly cultural values, including conservation**	
Trees to be considered for retention				
Category A **Trees of high quality** with an estimated remaining life expectancy of at least 40 years	Trees that are particularly good examples of their species, especially if rare or unusual; or those that are essential components of groups or formal or semi-formal arboricultural features (e.g. the dominant and/or principal trees within an avenue)	Trees, groups or woodlands of particular visual importance as arboricultural and/or landscape features	Trees, groups or woodlands of significant conservation, historical, commemorative or other value (e.g. veteran trees or wood-pasture)	See Table 2
Category B **Trees of moderate quality** with an estimated remaining life expectancy of at least 20 years	Trees that might be included in category A, but are downgraded because of impaired condition (e.g. presence of significant though remediable defects, including unsympathetic past management and storm damage), such that they are unlikely to be suitable for retention for beyond 40 years; or trees lacking the special quality necessary to merit the category A designation	Trees present in numbers, usually growing as groups or woodlands, such that they attract a higher collective rating than they might as individuals; or trees occurring as collectives but situated so as to make little visual contribution to the wider locality	Trees with material conservation or other cultural value	See Table 2
Category C **Trees of low quality** with an estimated remaining life expectancy of at least 10 years, or young trees with a stem diameter below 150 mm	Unremarkable trees of very limited merit or such impaired condition that they do not qualify in higher categories	Trees present in groups or woodlands, but without this conferring on them significantly greater collective landscape value; and/or trees offering low or only temporary/transient landscape benefits	Trees with no material conservation or other cultural value	See Table 2

© The British Standards Institution 2012

Appendix Two

Preliminary Tree Constraints Plan

© Tree Solutions Ltd (2014)

Legend

Root Protection Area Modified to Account for Site Features

Category
Crown Spread
Tree Number
Root Protection Area

Tree Position Approximate (not shown on original survey)

Category A (High Quality)
Category B (Moderate Quality)
Category C (Low Quality)
Category U (Dead/Dying/In Decline)

AM PM Approximate sweep of shade cast by trees in midsummer (based on potential new crown heights in 35 years)

Client:
Wrexham County Borough Council

Project:
Proposed Solar Farm on land at Legacy, Broowylfa Rd, near Wrexham, LL14 4HY

Title:
Preliminary Tree Constraints plan

Scale:	Date:
1:500 @ A0	March 2014
Drawn By:	Revision:
LI & AM	-
Job Ref:	Drawing No:
14/AIA/WXM/139	01

Do not scale from this drawing all dimensions to be checked on site.

The copyright of this document resides with Tree Solutions unless assigned in writing by the company

Tree Solutions
E: info@tree-solutions.co.uk
W: www.tree-solutions.co.uk
T: 01244 389114
M: 07766 774508

Legend

Root Protection Area Modified to Account for Site Features

Category — Crown Spread

Root Protection Area — Tree Number

Tree Position Approximate (not shown on original survey)

Category A (High Quality)

Category C (Low Quality)

Category B (Moderate Quality)

Category U (Dead/Dying/In Decline)

AM / PM — Approximate sweep of shade cast by trees in midsummer (based on potential new crown heights in 35 years)

Client:
Wrexham County Borough Council

Project:
Proposed Solar Farm on land at Legacy, Bronwylfa Rd, near Wrexham, LL14 4HY

Title:
Preliminary Tree Constraints plan

Scale:	Date:
1:500 @ A0	March 2014
Drawn By:	Revision:
LI & AM	-
Job Ref:	Drawing No:
14/AIA/WXM/139	01

Do not scale from this drawing all dimensions to be checked on site.

The copyright of this document resides with Tree Solutions unless assigned in writing by the company

Tree Solutions
E: info@tree-solutions.co.uk
W: www.tree-solutions.co.uk
T: 01244 389114
M: 07766 774508

Appendix Three

Impact Assessment Plan
(including Shade diagram)

© Tree Solutions Ltd (2014)

169.8m
160.9m
155.1m
Beechwood Farm
Avon Lea
Windy Ridge
Nantwood
Area B
Area C
Area D
Inv/Tr
Path (um)
3 No Small Holly - H4m, DBH 170mm
Sm Oak - H5m, DBH 120mm
Sm Hawthorn
G6 Position approximate
Dead Oak
Top of Canopy
Top of Pylon
Legend
Root Protection Area Modified to Account for Site Features
Category
Crown Spread
Tree Number
Root Protection Area
Tree Position Approximate (not shown on original survey)
Category A (High Quality)
Category B (Moderate Quality)
Category C (Low Quality)
Category U (Dead/Dying/In Decline)
AM
PM
Approximate sweep of shade cast by trees in midsummer (based on potential new crown heights in 35 years)
Client:
Wrexham County Borough Council
Project:
Proposed Solar Farm on land at Legacy, Bronwylfa Rd, near Wrexham, LL14 4HY
Title:
Arboricultural Impact Assessment
Scale:
1:500 @ A0
Date:
April 2014
Drawn By:
LI & AM
Revision:
-
Job Ref:
14/AIA/WXM/139
Drawing No:
02
Do not scale from this drawing all dimensions to be checked on site.
The copyright of this document resides with Tree Solutions unless assigned in writing by the company
Drawing sheets
01
02
N
5m
10m
20m
Tree Solutions
E: info@tree-solutions.co.uk
W: www.tree-solutions.co.uk
T: 01244 389114
M: 07766 774508

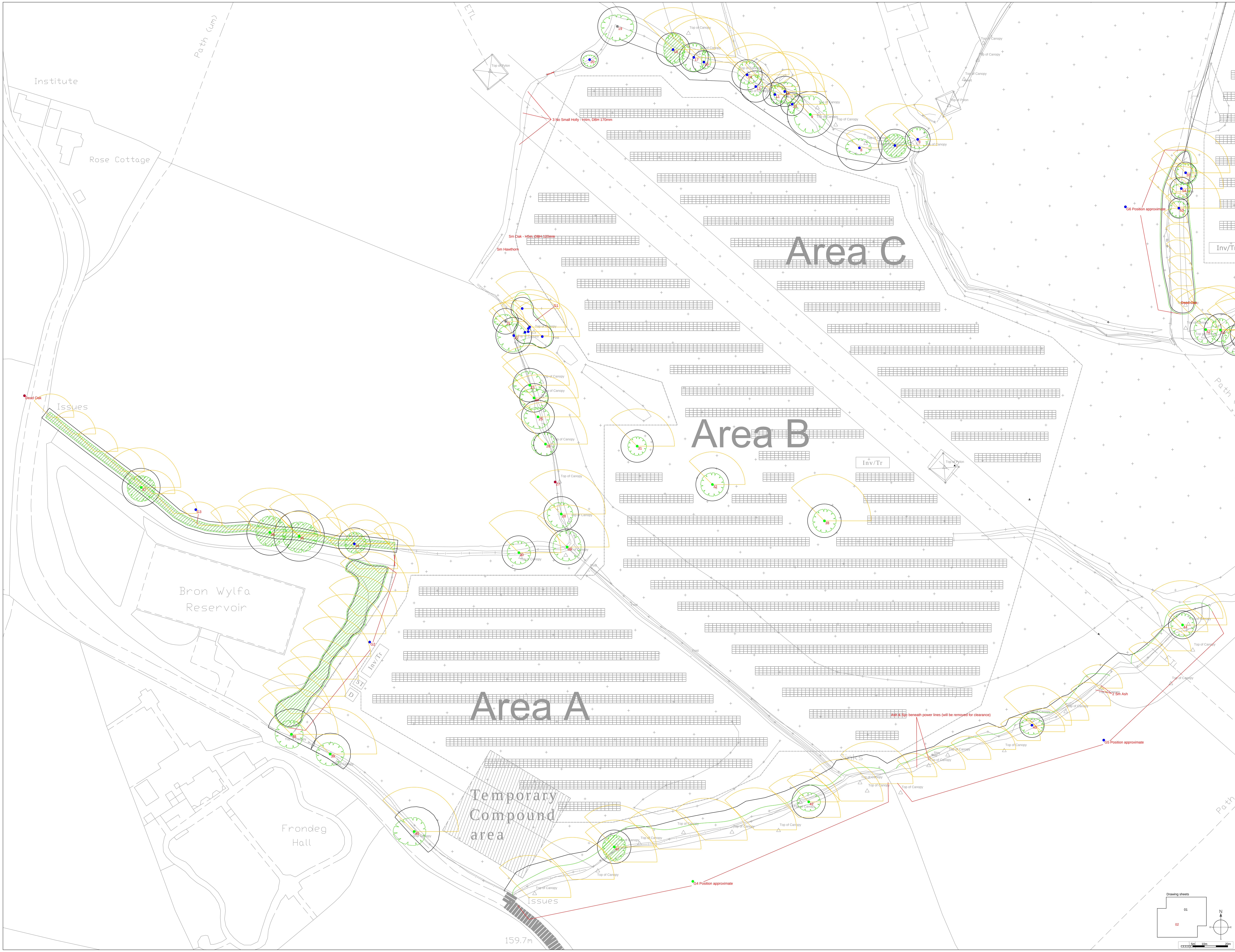

Legend

Root Protection Area Modified to Account for Site Features

Category — Crown Spread — Tree Number — Root Protection Area

Tree Position Approximate (not shown on original survey)

Category A (High Quality)

Category B (Moderate Quality)

Category C (Low Quality)

Category U (Dead/Dying/In Decline)

AM PM — Approximate sweep of shade cast by trees in midsummer (based on potential new crown heights in 35 years)

Client: Wrexham County Borough Council	
Project: Proposed Solar Farm on land at Legacy, Bronwylfa Rd, near Wrexham, LL14 4HY	
Title: Arboricultural Impact Assessment	
Scale: 1:500 @ A0	Date: April 2014
Drawn By: LI & AM	Revision: -
Job Ref: 14/AIA/WXM/139	Drawing No: 02

Do not scale from this drawing all dimensions to be checked on site.

The copyright of this document resides with Tree Solutions unless assigned in writing by the company

Tree Solutions
E: info@tree-solutions.co.uk
W: www.tree-solutions.co.uk
T: 01244 389114
M: 07766 774508

Appendix Four

Tree Protection Plan

© Tree Solutions Ltd (2014)

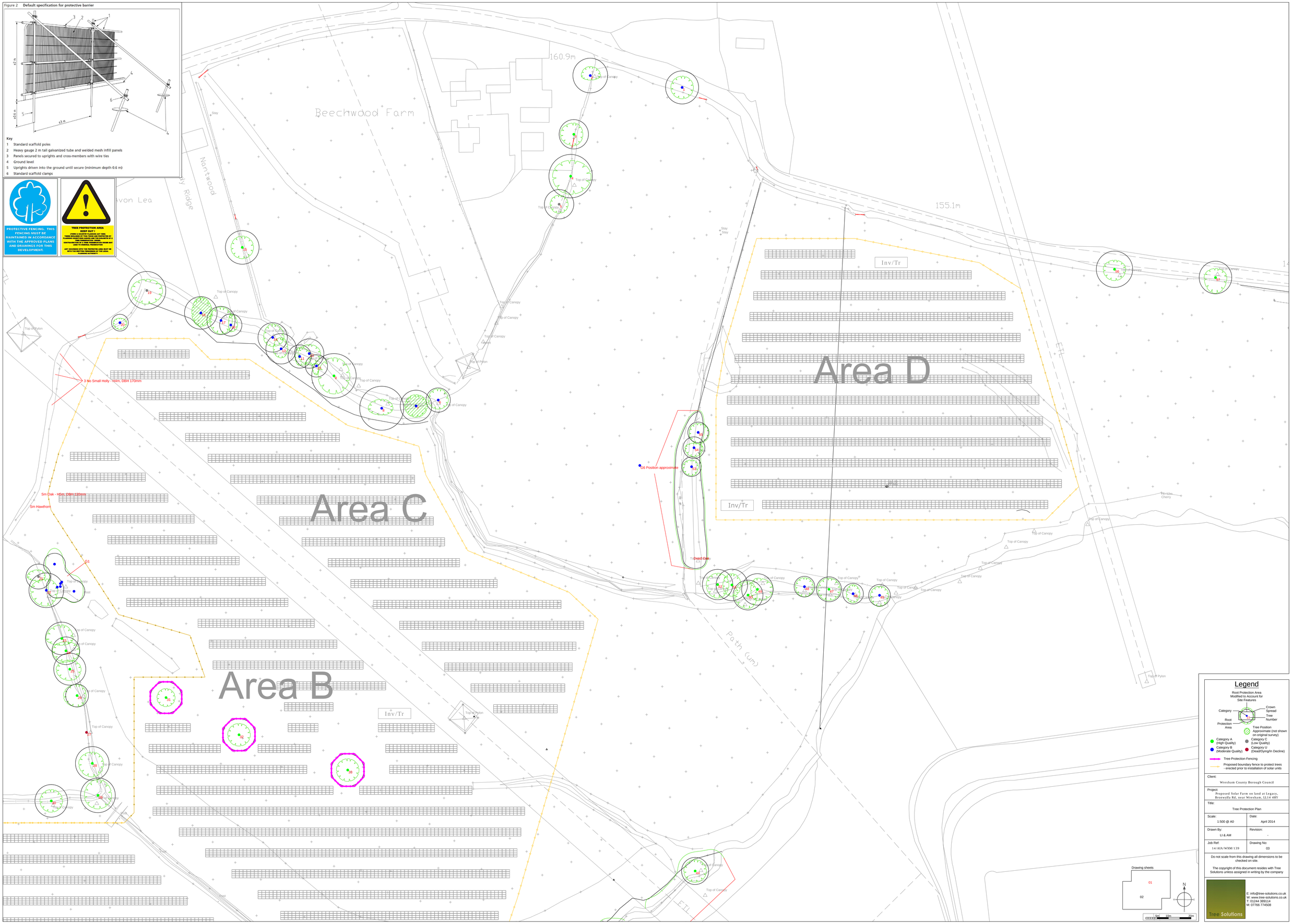

Figure 2 Default specification for protective barrier

Key
1 Standard scaffold poles
2 Heavy gauge 2 m tall galvanized tube and welded mesh infill panels
3 Panels secured to uprights and cross-members with wire ties
4 Ground level
5 Uprights driven into the ground until secure (minimum depth 0.6 m)
6 Standard scaffold clamps

PROTECTIVE FENCING. THIS FENCING MUST BE MAINTAINED IN ACCORDANCE WITH THE APPROVED PLANS AND DRAWINGS FOR THIS DEVELOPMENT.

TREE PROTECTION AREA
KEEP OUT !
(TREES & SHRUBS PLANTED ARE NOT THIS TREES DISPLAYED BY THIS FENCE AND PROTECTED BY PLANNING CONDITIONS AND THE SUBJECTS OF A TREE PRESERVATION ORDER.
CONTRAVENTION OF A TREE PRESERVATION ORDER MAY LEAD TO CRIMINAL PROSECUTION
ANY ACCESS WITH THE PROTECTION AREA MUST BE WITH THE WRITTEN PERMISSION OF THE LOCAL PLANNING AUTHORITY.

Figure 2 **Default specification for protective barrier**

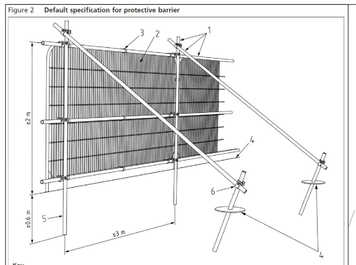

Key

1 Standard scaffold poles
2 Heavy gauge 2 m tall galvanized tube and welded mesh infill panels
3 Panels secured to uprights and cross-members with wire ties
4 Ground level
5 Uprights driven into the ground until secure (minimum depth 0.6 m)
6 Standard scaffold clamps

Area A

Area B

Area C

Temporary Compound area

Temporary site access located outside the RPA of all trees

3 No Small Holly - H4m, DBH 170mm

Sm Oak - H5m, DBH 130mm

Sm Hawthorn

Dead Oak

G1

G2 Position approximate

G3 Position approximate

G4 Position approximate

G5 Position approximate

2 Sm Ash

Ash & Sycamore beneath power lines (will be removed for clearance)

Bron Wylfa Reservoir

Frondeg Hall

Path (um)

ETL

Inv/Tr

Top of Pylon

Top of Canopy

Issues

159.7m

Legend

Root Protection Area Modified to Account for Site Features

Category — Crown Spread — Root Protection Area — Tree Number

Tree Position Approximate (not shown on original survey)

Category A (High Quality)
Category B (Moderate Quality)
Category C (Low Quality)
Category U (Dead/Dying/In Decline)

Tree Protection Fencing

Proposed boundary fence to protect trees - erected prior to installation of solar units

Client: Wrexham County Borough Council

Project: Proposed Solar Farm on land at Legacy, Bronwylfa Rd, near Wrexham, LL14 4HY

Title: Tree Protection Plan

Scale:	Date:
1:500 @ A0	April 2014
Drawn By: LI & AM	Revision: -
Job Ref: 14/AIA/WKM/139	Drawing No: 03

Do not scale from this drawing all dimensions to be checked on site.

The copyright of this document resides with Tree Solutions unless assigned in writing by the company

Drawing sheets: 01, 02

N

1:500 10m 20m

Tree Solutions
E: info@tree-solutions.co.uk
W: www.tree-solutions.co.uk
T: 01244 389114
M: 07766 774508

Appendix Five

Tree Protective Measures/Method Statement

© Tree Solutions Ltd (2014)

SEQUENCE OF OPERATIONS

From commencement of the above development, the following methodology shall be implemented in the manner and sequence described:

1. Erect temporary protective fencing
2. Main construction phase
3. Removal of temporary fencing
4. Landscaping within RPA's
5. Site supervision

1. Temporary Tree Protective Fencing Erection

1. Prior to commencement of any site works, construction, or material deliveries the main contractor shall erect the temporary protective fencing as detailed in the 'Tree Protection Specification' and in the location indicated on the Tree Protection Plan.

2. Prior to installation of the solar units, the site boundary fencing shall be erected leaving gaps for vehicular access in the locations identified on the Tree Protection Plan.

2. Main Construction Phase

1. There shall be no storage of construction material, site parking, site accommodation or equipment in any area designated as the Root Protection Area (RPA) and Construction Exclusion Zone (CEZ) and enclosed by Temporary Protective Fencing
2. No materials that are likely to have an adverse effect on tree health such as oil, bitumen or cement will be stored or discharged within 10 metres of the trunk of a tree that is to be retained. No fires will be lit.
3. The site agent shall supervise deliveries by self-loading crane, with vehicles positioned in such a manner that retained trees are not at risk of damage.

Avoiding Damage to Stems and Branches

4. Care shall be taken when planning site operations in proximity to trees to ensure that wide or tall loads or plant with booms, jibs and counterweights can operate without coming into contact with retained trees. Such contact can result in serious injury resulting in safe retention impossible.

On Site Storage of Spoil and Building Materials

5. Prior to and during all site construction works no spoil will be stored within the crown spread on any tree on or adjacent to the site even if proposed site work is to be within the crown spread. Any encroachment within this protected area will only be with the prior agreement of the LPA Arboricultural Officer.

3. Remove all Temporary Tree Protective Fencing

1. Tree Protective fencing will only be removed upon completion of all construction work and once all machinery associated with the works has left site.

4. Landscaping within the RPA of trees

1. Landscaping works will be implemented in accordance with a scheme approved by the LPA
2. There shall be **no rotovation** of ground within any area designated as a Root Protection Area (RPA) and Construction Exclusion Zone (CEZ) and enclosed by Temporary Protective Fencing.
3. No hard landscaping works or excavation for cables or any other service should be installed within the Root Protection Area (RPA) and Construction Exclusion Zone (CEZ) without the written consent of the LPA.

 © Tree Solutions Ltd (2014)

5. ARBORICULTURAL SITE SUPERVISION

1 The erection of all tree protection measures outlined in this AMS and as indicated on the Tree Protection Plan will be inspected by the contract Arboricultural Consultant immediately after erection. Photographic evidence of the location and specification of all protective fencing will be forwarded to the LPA Tree Officer upon completion.
2 All proposed work within any designated RPA will be overseen by the contract Arboricultural Consultant with photographic records taken and signed inspection report emailed direct to the LPA for approval
3 The contract Arboricultural Consultant to make visits to site to inspect all tree protection measures during all key development work within close proximity to retained trees

TREE PROTECTION SPECIFICATION

The Root Protection Area (RPA) and Construction Exclusion Zone (CEZ) enclosed by temporary protective fencing shall:

1. Be erected prior to any demolition works, delivery of site accommodation or materials and shall remain for the duration of construction works.
2. Preclude all construction activity with the sole exception of specified arboricultural works and as such works as have been agreed by all parties and to be carried out under supervision.
3. Be protected by temporary protective fencing and other measures as specified.
4. Preclude the storage or tipping of all materials and substances, in addition, toxic substances such as fuels, oils, additives, cement, or other deleterious substances within 5.0 meters of an exclusion zone.
5. Clearly legible weatherproof signage, stating “Protected Trees – Exclusion Zone” shall be attached to the fencing 1.5m from the ground, facing out of the Tree Protection Zone located at regular intervals along the fence line. .
6. Other than works detailed within this method statement or approved in writing by the Local Planning Authority (LPA), no works including storage or dumping of materials shall take place within the exclusion zones defined by the protective fencing.
7. Any incursion into the Root Protection Area (RPA) and Construction Exclusion Zone CEZ) must be by prior arrangement, following consultation with the LPA

Protective Fencing Detail

1. Magenta

Figure 2 **Default specification for protective barrier**

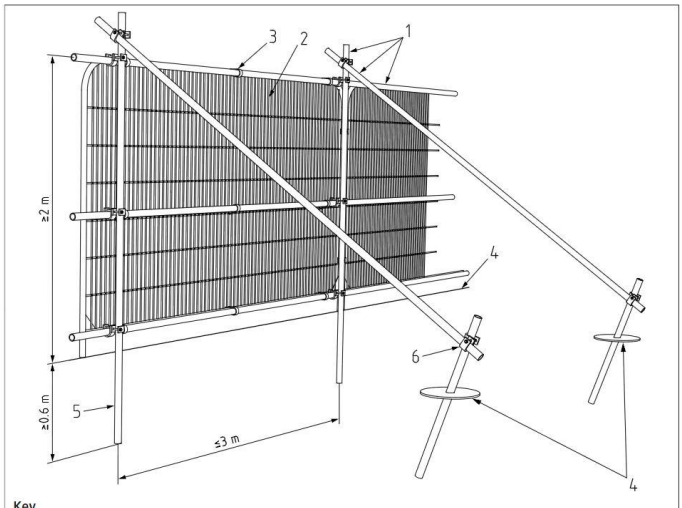

Key
1 Standard scaffold poles
2 Heavy gauge 2 m tall galvanized tube and welded mesh infill panels
3 Panels secured to uprights and cross-members with wire ties
4 Ground level
5 Uprights driven into the ground until secure (minimum depth 0.6 m)
6 Standard scaffold clamps

 © Tree Solutions Ltd (2014)

Useful Contacts

Arboricultural Consultant

Name: Alistair Henderson (Tree Solutions Ltd)
Tel: 01244 389114
Mobile: 07766 774508
Email: alistair@tree-solutions.co.uk

LPA Arboricultural Officer

Name: Moray Simpson
Tel: 01978 298763
Email: moray.simpson@wrexham.gov.uk

 © Tree Solutions Ltd (2014)