ENGINEERING MODIFICATIONS

ISSUE	ENGINEERING NOTES	SHEET No.	GRID	DATE	BY
B	Update to Top, Middle and Bottom Section – which includes fainge size increased and earth bolts + Top Section length increased to maintain 2500 clearance	2	##	02/12/09	KH
C	Changed screw length of item 3 from 40mm to 45mm (MR 1021)	2	##	14/02/12	DB
D	Updated incorrect Title, TGallows changed to Gallows	2	##	15/06/12	KH
E	Gusset Plates added to drop leg due to Eurocode calculations	2	3-5A	11/09/12	KH

SHEET No.	DESCRIPTION
1	ENGINEERING NOTES
2	ASSEMBLY
3	XXX
4	XXX
5	XXX
6	XXX
7	XXX
8	XXX
9	XXX
10	XXX
11	XXX
12	XXX

FABRICATION TOLERANCE
PLUS OR MINUS 1.0mm FOR THE FIRST 600mm, UPTO PLUS OR MINUS 2.00 MM

MACHINING TOLERANCE
STANDARD MACHINING TOLERANCE UNLESS OTHERWISE SPECIFIED, PLUS OR MINUS 0.1mm

CABLE TOLERANCE
≦100mm ± 5mm
≦1000mm ± 10mm
>1000mm ± 20mm

WELDING
ALL WELDS TO B.S. 5950-2 :2001

ALL DIMENSIONS IN mm

INFOTEC Ltd
The Maltings, Tamworth Road,
ASHBY-de-la-ZOUCH
Leics LE65 2PS
www.infotec.co.uk

3rd ANGLE PROJECTION

Desciption :- P5062
SIP-TOP/Gallows-TT2
TT2 (Double Sided Portrait display e.g. P1100, P1118)
Assembly

Drawing No :- 16236A-E

D No :- D_37
Drawn By :- KH
Date :- 20/02/08
Scale N/A

DO NOT SCALE
IF IN DOUBT ASK
Checked By :- SH
Date :- 26.03.08
Sheet 1/2

This print is the property of INFOTEC LTD. It is confidential and returnable on demand. It is not transferable and may not be copied without express permission.

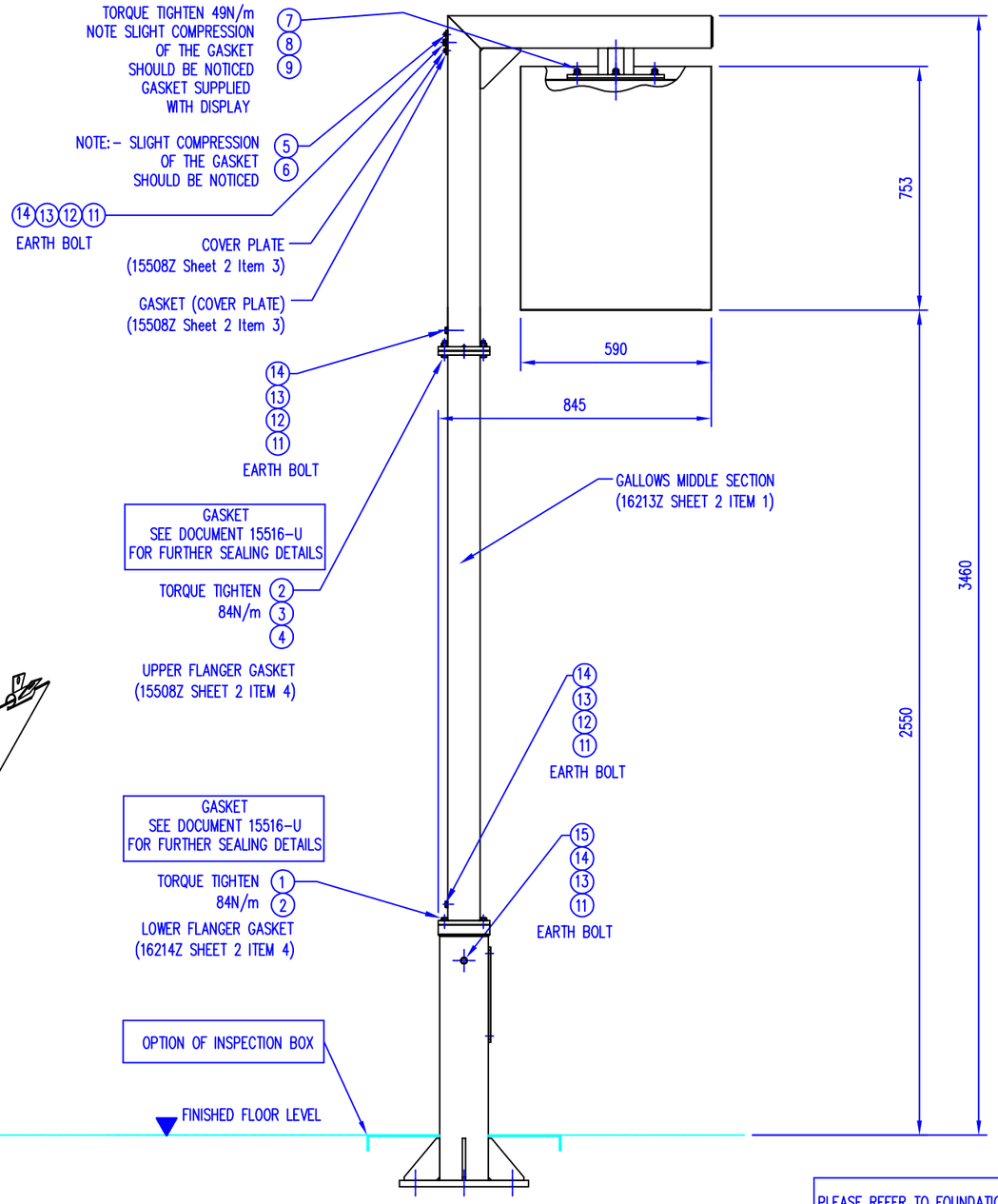

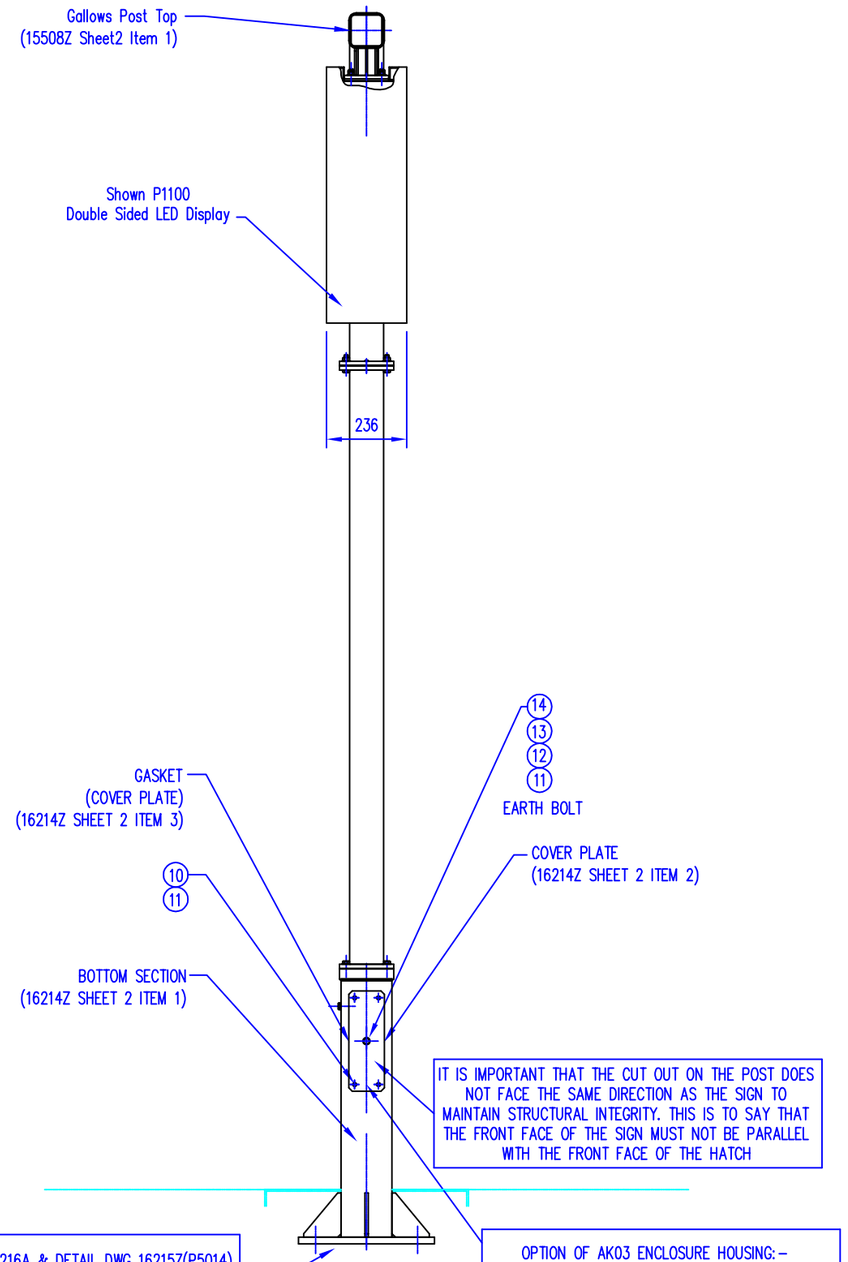

ITEM	DESCRIPTION	QUANTITY	ITEM	DESCRIPTION	QUANTITY
1	M12 x 35 HEX HEAD BOLT (GRADE 8.8) GALVANISED	4	8	M10 PLAIN WASHER (STAINLESS STEEL) A2-Supplied with display	6
2	M12 PLAIN WASHER (STEEL) - GALVANISED	8	9	M10 HEX NUT HALF (STAINLESS STEEL) A2-Supplied with display	6
3	M12 x 45 HEX HEAD BOLT (GRADE 8.8) GALVANISED	4	10	M10 X 25 HEX SOCKET HEAD CAP SCREW ISO 4762-GALVANISED	4
4	M12 HEX NUT (GRADE 8) GALVANISED	4	11	M10 WASHER DIN 125-1 A - 10.5 - GALVANISED	14
5	M6 x 16 HEX HEAD BOLT (GRADE 8.8) GALVANISED	4	12	M10 x 30 HEX HEAD SCREW (GRADE 8.8) GALVANISED	4
6	M6 PLAIN WASHER (STEEL) GALVAINSED	4	13	M10 WASHER EXTERNAL TOOTH SHAKEPROOF - STAINLESS STEEL	5
7	M10 HEX NUT FULL (STAINLESS STEEL) A2-Supplied with display	6	14	M10 HEX NUT NYLOC (GRADE 8.8) GALVANISED	5
			15	M10 x 50 HEX HEAD SCREW (GRADE 8.8) GALVANISED	1

FABRICATION TOLERANCE
PLUS OR MINUS 1.0mm FOR THE FIRST 600mm,
UPTO PLUS OR MINUS 2.00 MM

MACHINING TOLERANCE
STANDARD MACHINING TOLERANCE UNLESS
OTHERWISE SPECIFIED, PLUS OR MINUS 0.1mm

CABLE TOLERANCE
≦100mm ± 5mm
≦1000mm ± 10mm
>1000mm ± 20mm

WELDING
ALL WELDS TO
B.S. 5950-2 :2001

ALL DIMENSIONS
IN mm

INFOTEC Ltd
The Maltings, Tamworth Road,
ASHBY-de-la-ZOUCH
Leics LE65 2PS
www.infotec.co.uk

3rd ANGLE PROJECTION

Description :- P5062
SIP-TOP/Gallows-TT2
TT2 (Double Sided Portrait display
e.g. P1100, P1118)
Assembly

Drawing No :- 16236A-E

D No :- D_37	DO NOT SCALE IF IN DOUBT ASK
Drawn By :- KH	Checked By :- SH
Date :- 20/02/08	Date :- 26.03.08
Scale N/A	Sheet 2/2

This print is the property of INFOTEC LTD. It is confidential and returnable on demand. It is not transferable and may not be copied without express permission.