RESIDENCENINE

Authentic Window Designs

Solutions for Planners and Homeowners in Conservation Areas

Visit us at **www.residence9.co.uk**

Follow us on Twitter
@residence9

Find us on Facebook
facebook.com/residence9

A44ppBrochure.indd 1 31/5/12 14:19:58

1.1 Conservation Areas

A conservation area is an area of specific architectural or historical interest, the character or appearance of which is desirable to preserve or enhance. Many of your towns, local street scapes rely on historic windows for much or their architectural impact and character. Inappropriate, poor quality replacement windows can easily erode traditional features on historic buildings.

1.2 Article 4

Article 4 is when a planning authority applies to restrict development rights in a conservation area. Replacement windows then need planning approval and conservation area consent. This is quite rightly done to preserve architectural merit. Some planning authorities precluded the use of modern materials because the window designs were inappropriate in size, shape and design. A more modern approach has been to approve the use of Residence 9 because of its consideration of the Article 4 directives. It has been specifically designed to replicate the documented historical window designs from the period.

"The use of modern material will be accepted provided that the window is of design, dimensions, detailing and opening mechanisms are similar to the original window"

1.3 Listed Buildings

Listed buildings are the most important buildings in the town and are protected nationally with specific control over alterations. It is generally more difficult to replace windows in these buildings and approval must be obtained via English Heritage or Historic Scotland. Whilst Residence 9 is an authentic looking window it is generally preferred to repair windows in listed buildings.

2.1 Preserve Kerbside Appearance

Residence 9 is a window system designed to authentically replicate... the kerbside appearance of traditional timber window frames. This is achieved by mirroring the sizes as historically documented and as listed in many article 4 planning guidelines. Furthermore, the system is flush sash and always dummy sash - just like the originals. Residence 9 replicates the putty line chamfer externally and decorative detailing internally.

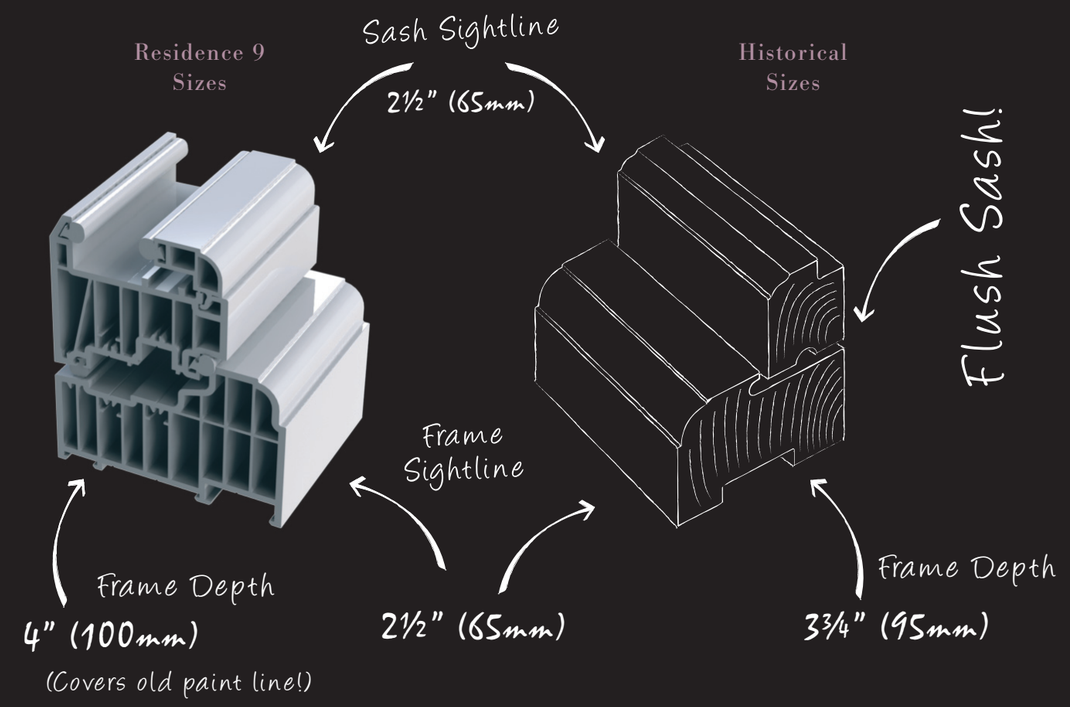

Sympathetic preservation of beautiful period homes... authentic sightlines, detailing and opening mechanisms.

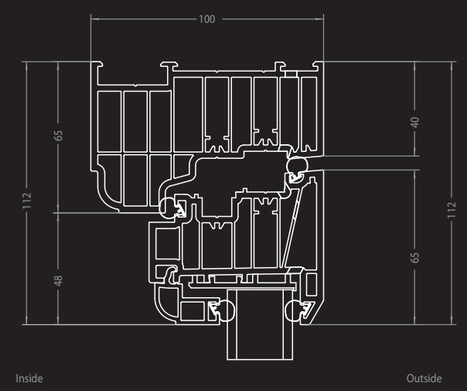

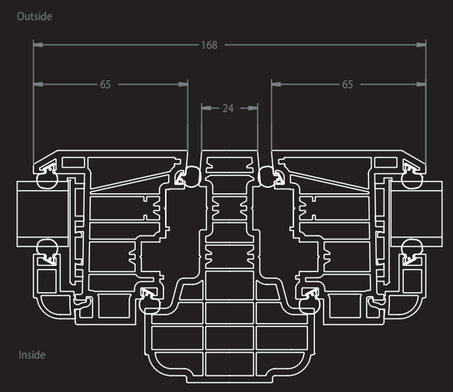

2.2 Preserve Authentic Details...

Residence 9 is designed to authentically replicate... Traditional methods of mechanically jointing window frames and sashes. Our details are authentic in appearance and are made by craftsmen. Residence 9 is only sold in authentic colours and finishes.

...& 2.3 Authentic Opening Mechanisms and Hardware

Residence 9 is designed to authentically replicate... Traditional opening mechanisms and hardware including butt hinges, monkey tails handles and peg stays.

3.0 Invest in traditional buildings...

Rotten windows can destroy the building envelope through damp etc.. Residence 9 will help restore weather tightness, keep heat in and moisture out preserving our period housing stock for the next generation. Specify Residence 9 – the authentic ' flush sash' window solution.

Eclectic SYSTEMS

Eclectic Systems LLP , Unit C
Quedgeley West Business Park
Bristol Road, Gloucester
GL2 4PA

T +44 (0) 1452 300912
F +44 (0) 1452 416654
E info@eclecticsystems.co.uk
W www.eclecticsystems.co.uk

R9

Eclectic Systems LLP is a Limited Liability Partnership registered in England & Wales with registration number No OC367592. A list of partners' names is available from the registered office: Crowe Clark Whitehill LLP, Carrick House, Lypiatt Road, Cheltenham, Gloucestershire, GL50 2QJ