Archaeologia Cambrensis 160 (2011), 51–113

Roman-British settlement at Plas Coch, Wrexham: excavations 1994–96

By NIGEL W. JONES[1]

with contributions by Denise Allen, Astrid E. Caseldine, Catherine J. Griffiths, J. L. Davies, Brenda M. Dickinson, Alex Gibson, Kay F. Hartley, William H. Manning, Wendy J. Owen, Mark Walters, Janet Webster, and Peter V. Webster

Rescue excavations were undertaken in three phases in 1994–96 during the construction of a new retail development on the western outskirts of Wrexham, in north-east Wales. Although a significant part of the site had already been lost, the excavations uncovered evidence to suggest the presence of a small villa, or perhaps a building connected with the Roman administrative system, which was initially of timber construction and later replaced in stone, or at least with stone foundations. Dating evidence suggests some earlier Roman activity, although the main occupation appeared to date from the later second century until the early fourth century. The partial plan of one building was identified, set within a ditched enclosure and surrounded by a system of regular fields. Bronze Age activity is indicated by a pit and soil layer containing pottery and lithics.

INTRODUCTION

Salvage excavations were undertaken in advance of a large retail development at Plas Coch, Wrexham (SJ 326517, Fig. 1) which uncovered part of a Romano-British settlement and some evidence for earlier, Bronze Age, activity. The development covered an area of 3.56 hectares, the most of which had already been machined to a level below which any archaeology survived by the time archaeologists were notified. It later became clear that metal detector finds had been recovered over a large part of the area some weeks prior to this.

Two phases of excavation were undertaken in 1994–95 by staff of the Clwyd-Powys Archaeological Trust (CPAT), under the supervision of the author, together with staff of the former Clwyd County Council (CCC), supervised by Stephen Grenter, and the former Wrexham Maelor Borough Council (WMBC), under the supervision of Bill Slater. The excavations were conducted with the full co-operation of the developers, Gallifords Northwest. The finds were initially processed by staff of WMBC, with subsequent post-excavation analysis by CPAT. The work undertaken by CPAT during the excavation and post-excavation phases, as well as the production of this report was funded by Cadw. A final phase of excavation was conducted by Gifford and Partners in 1996, under the supervision of Gerry Wait, with funding from Audley Developments.

This report presents a summary of the results from all three phases of excavations and draws on the interim reports produced for the initial rescue excavations in 1994–95 (Jones 1997) and the subsequent excavations in 1996 (Gifford and Partners 1998). The original intention was to produce a full synthesis of the all the excavations results, but unfortunately a significant part of the archive from the 1996 excavations was unavailable for study at the time this report was prepared. While this may not greatly affect the general interpretation of the site, the reports on finds have necessarily been largely confined to

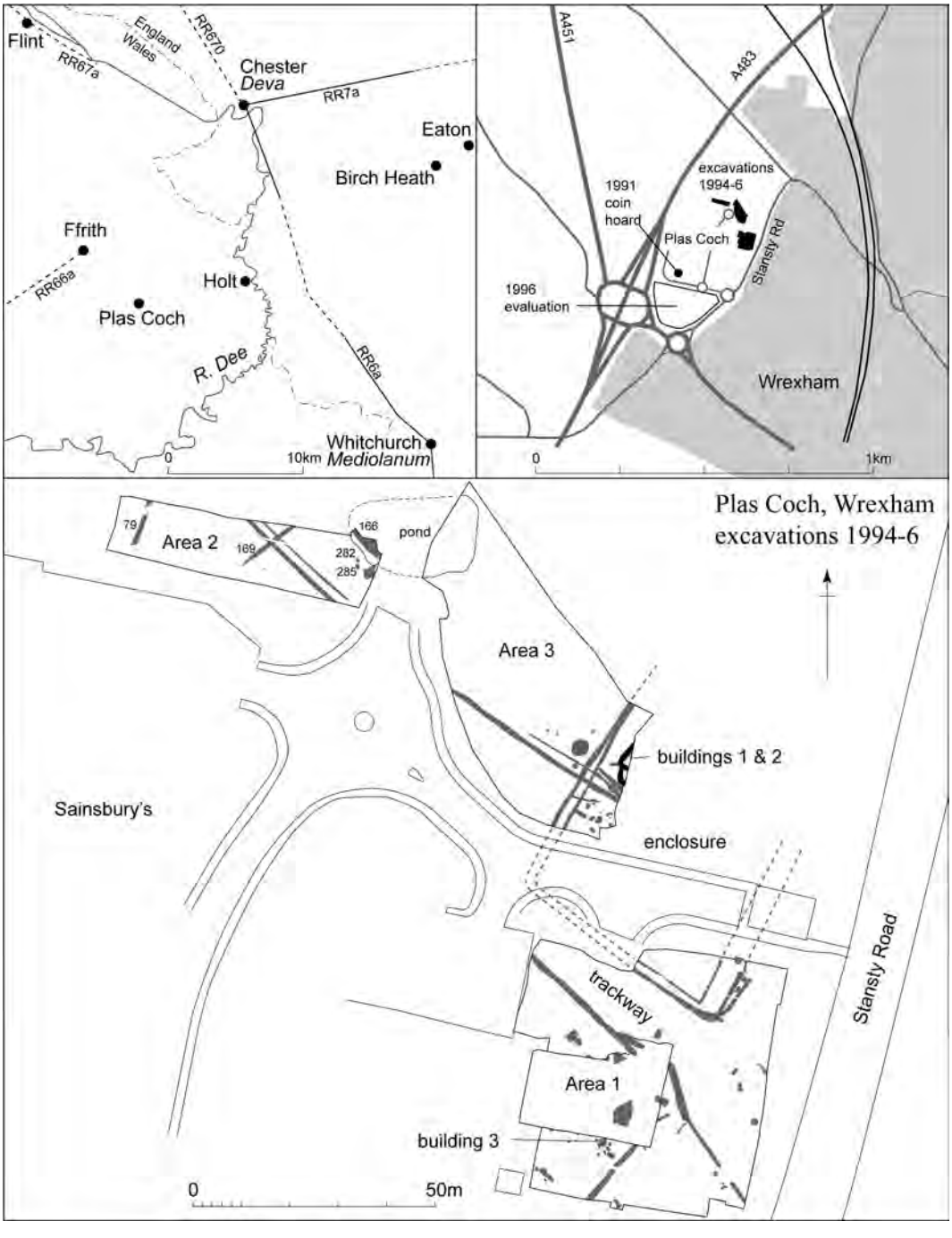

Fig. 1. Location of the 1994–96 excavations at Plas Coch.

the material recovered from the 1994–95 excavations. The finds from the excavations as a whole have been deposited with Wrexham Museum, together with the site archive for the 1996 excavations, while the site archive for the earlier excavations has been retained by CPAT in Welshpool. Copies of archive material used in the production of this report are housed within both archives.

BACKGROUND

The development of the retail park at Plas Coch commenced in 1991 and during the construction of a Sainsbury's supermarket there were reports that a coin hoard had been discovered by construction workers. Although these reports would appear to be genuine, the hoard was never fully catalogued and its precise contents remain unknown. The hoard provided the first clear indication of Romano-British settlement at Wrexham, although other finds were already known in the Wrexham area. The site lies 17 kilometres south-east of Chester, 8.5 kilometres south-west of the legionary tile works and barracks at Holt (Grimes 1930), and 6 kilometres south-east of Ffrith, where a fairly extensive late first to early second-century settlement has been postulated (Blockley 1989, 163–4).

The Sainsbury's site was the first to be occupied on the retail park. When construction work began on additional areas during 1994 rumours again began to circulate regarding finds of Roman date being uncovered on the site. It was not until August 1994, however, that Wrexham Museum Service and Clwyd Archaeology Service were alerted to the discoveries, which it transpired had been found by metal detectorists on the construction site. Many of the finds recovered at this time were

Fig. 2. General view of the 1994 excavations in Area 1 with work proceeding in the area of the corn-drying kiln.

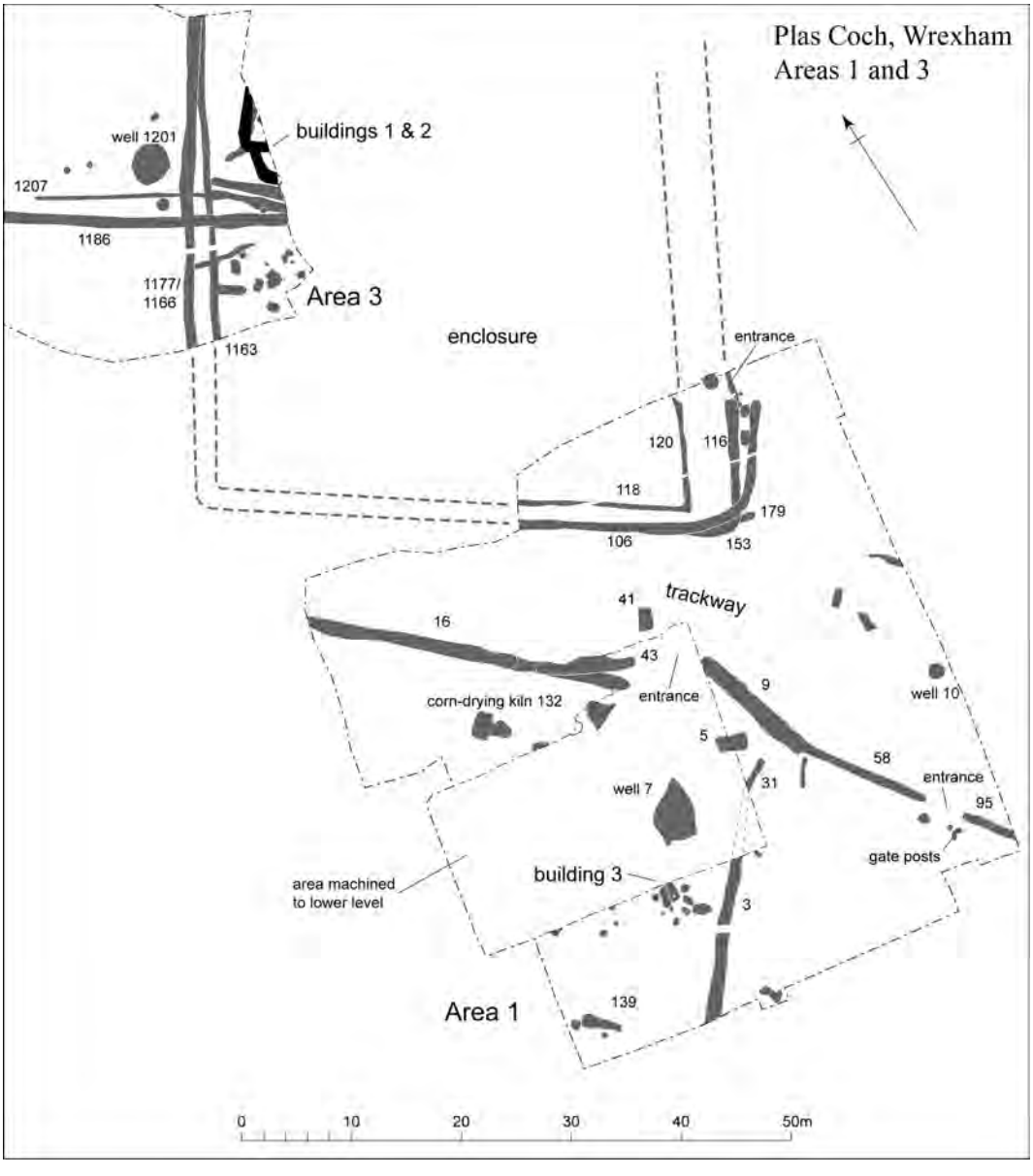

Fig. 3. Plan of Areas 1 and 3 showing the enclosure, field boundaries and the location of Buildings 1–3.

subsequently handed to Wrexham Museum Service and included coins (listed in the finds report below), as well as a number of brooches (of which no information is now available) and two bronze patera handles from the area of the primary school immediately to the north of Plas Coch (now held by Wrexham Museum).

During September and October 1994 an area of 1,685m^2 (Fig. 1, Area 1; Fig. 2) was stripped by machine down to the surface of archaeological deposits in an area previously unaffected by the

development, but surrounding a part of the site which had already been taken down to a lower level, substantially below the surface of the natural subsoil. The main evidence recovered consisted of a series of discontinuous, shallow ditches, which were presumably boundary markers, aligned mainly north-west to south-east, with others at right-angles to them (Fig. 3). A corn-drying kiln, two wells and a possible hearth were the only structural evidence for buildings, although a quantity of roofing tile was also recovered. In the northern part of the area a shallow recut ditch, roughly parallel to the boundary ditches, formed part of the south-west and south-east sides of an enclosure, with an entrance on the south-eastern side. Within the enclosure, a narrow linear slot ran parallel to the ditch, and was thought to be associated with a palisade (Burnham 1995; Grenter *et al.* 1994).

Further excavations were conducted during February 1995, concentrating on an area to the north-west of the earlier excavations (Fig. 1, Area 2). Several ditches had been revealed in section to the north of the Sainsbury's site, beyond which an area measuring *c.* 55m by 18m remained relatively undisturbed. The excavations revealed further boundary ditches and several postholes, although with no obvious indications of structures. Between this and the earlier site, features had previously been observed in section beneath a recent dump of hardcore (Fig. 1, Area 3). Only a limited area was available for excavation, but this revealed the stone foundations for the corner of a building with a possible apse, which it was thought might be related to the enclosure identified previously. The excavations uncovered a significant quantity of pottery, ranging in date from late first/early second-century to late third/fourth-century (Burnham 1996; Grenter *et al*. 1995).

A final phase of excavations was undertaken in relation to a new planning proposal, the work being undertaken by Gifford and Partners and funded by the developer. The work involved the complete excavation of features previously planned and sampled in Area 1 and the westward expansion of Area 3. The excavation was conducted during September 1996, uncovering the partial plan of the building previously identified in Area 3, together with a continuation of some ditches from Area 2 and a few additional features in Area 1 (Wait 1996; 1997).

In addition to excavations on the main site, a further area of the retail park was the subject of an archaeological evaluation in May 1996, also by Gifford and Partners. This investigated an area of around 15,000m^2 at the south-western corner of the development (Fig. 1). A geophysical survey was conducted by West Yorkshire Archaeology Service which identified what appeared to be the outline of a building (Webb 1996). This was later investigated by trial excavations which identified no features of archaeological significance within the area, concluding that the survey anomalies were responding to the underlying geology as well as a number of modern features (Rogers 1996).

EXCAVATIONS

The modern ploughsoil was mostly removed by machine directly onto the surface of the natural glacial deposits, which varied from gravels to fine silt and clay. The excavations were divided into three areas totalling 5,910m^2, with the 1994–95 investigations focusing on Areas 1 and 2, with only limited excavations in Area 3 owing to the presence of a soil dump. The 1996 excavations re-examined Area 1, completing the excavations in that area, as well as examining Area 3 in more detail.

The majority of features identified may be assigned to the Roman period, although there was also limited evidence for prehistoric activity as well as several post-medieval and modern features. Evidence of prehistoric activity was largely limited to a few sherds of pottery and several flints. In Area 2 two adjacent small, irregular pits (282 and 285), both had small cobbles packed into the top. Pit 285 produced 871g of probable Bronze Age pottery, much of which was extremely fragmented. Analysis of soil samples

revealed a quantity of hazelnut fragments and some spelt wheat from both pits. A further six sherds of Bronze Age pottery were recovered from the base of the modern ploughsoil (163). Although several finds of flint and chert were recovered, including a Neolithic or Bronze Age side and end scraper from Roman boundary ditch 3 and a utilized flake from post-medieval boundary ditch 82, they must all be considered residual finds. Sherds of possible prehistoric pottery were also recovered from pit 5, part of which had already been removed before the initial stages of excavation, although no further details of the finds were available.

The excavations produced evidence for several phases of Romano-British occupation which may be dated broadly to the second and third centuries AD. However, the lack of any stratagraphic sequence over the majority of the excavated areas has hampered the establishment of secure phasing for the site a whole. Although some features produced moderate assemblages of dateable material, for most there was insufficient evidence to provide any close dating. The only areas where any significant stratigraphic sequence remained was in relation to Buildings 1 and 2 in Area 3, and the surrounding enclosure ditches, where three main phases of activity could be identified.

The excavated features may be broadly divided into structural evidence, enclosures, boundaries, and miscellaneous features, each of which is described separately below.

During the initial phase of excavations an examination of exposed sections surrounding a further area of the development north of Area 1 revealed several features extending beneath a large dump of hardcore. These were examined by two small trial excavations during the second phase (Area 3), although the area available was severely limited. The excavations revealed the remains of cobbled foundations for a building the majority of which had already been lost to the development. The remaining area beneath the hardcore was subsequently excavated in 1996, revealing a rectangular building on stone cobble foundations with a later extension at the south-west end, together with an earlier timber phase.

There was some evidence for Roman activity pre-dating the earliest building, consisting of a shallow, curving gully (1291) and the remnants of what was interpreted as a ploughsoil (1269, 1273 and 1310, stippled on Fig. 4) which had been cut by Buildings 1 and 2 and survived only where sealed beneath demolition rubble. Sherds of Central Gaulish samian were recovered from gully 1291 which were of Hadrianic–Antonine date.

Building 1 (Fig. 4A)

The earliest structure was founded on earth-fast posts and may have incorporated some or all of the seven postholes which survived within the excavated area (1161, 1246, 1284, 1289, 1311, 1313 and 1315). The postholes were generally relatively small, with diameters of between 0.15m and 0.5m and a maximum depth of 0.32m. It seems probable that the north-western side of the building was formed by postholes 1315, 1246 and 1311, giving a length of at least 2.2m, perhaps with an intervening post having been removed by the foundation for Building 2. Only two of the postholes contained packing stones (1214 and 1313) and a further two (1161 and 1284) retained evidence for a post-pipe, while the remainder were thought to have been deliberately removed prior to the construction of the later stone building. The only dating evidence came from posthole 1161, consisting of sherds of Black-burnished ware and Dressel 20 amphora, dated to later than AD 200, although the feature is not definitely part of the building. However, two of the postholes (1246 and 1315) cut through gully 1291, which contained Hadrianic–Antonine pottery.

A curving slot (1317) extended south-eastwards from posthole 1311, although it was not clear whether this was a drainage feature, or perhaps a foundation slot related to a timber-built apse. The building was positioned within, and on the north-west side of a rectangular enclosure with evidence for three or four phases, defined by narrow ditches and a possible palisade slot (see below).

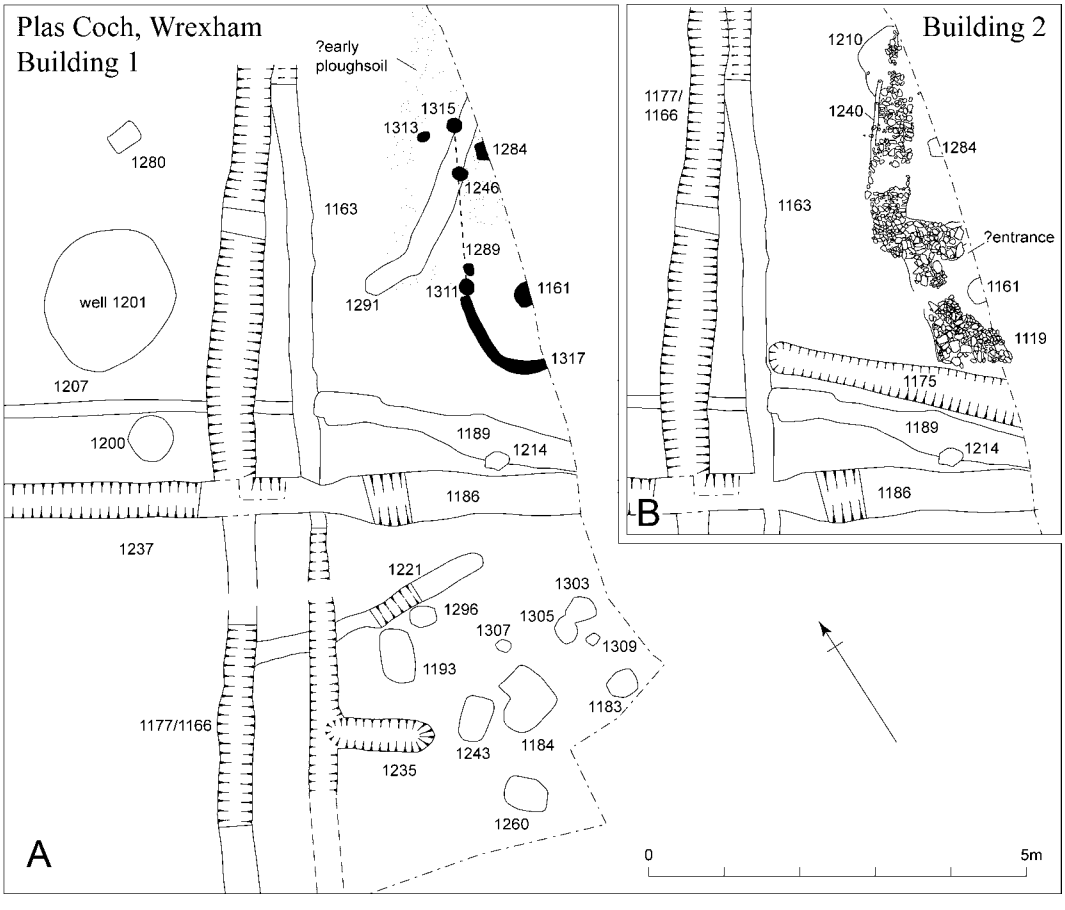

Fig. 4. Plan of Buildings 1 and 2 and adjacent features.

To the south-west of the building a slightly irregular gully (1189), up to 0.9m wide and 0.2m deep, was considered to be a possible beam slot, although it is not clear how this might have been associated with Building 1. The only other structural evidence in that area consisted of two postholes (1307 and 1309) and two shallow gullies (1221 and 1235) in amongst a group of pits. Both gullies had been cut by the north-western side of the enclosure (1163 and 1177), while gully 1221 produced sherds of greyware dated to later than AD 180, suggesting that they may be part of the earliest phase of Roman activity. Three of the pits (1243, 1260 and 1303) contained second-century pottery, while pit 1184 also contained sherds of third-century pottery, together with some ironwork and pit 1193 produced later third- to early fourth-century shell-tempered ware. It is likely that these features are not all contemporary and represent activity associated with Buildings 1 and 2, although it was not possible to determine their function.

Building 2 (Figs 4B, 5)

The post-built building was replaced and overlain by a more substantial structure the foundations for which consisted of a shallow, flat-bottomed trench (1210), around 1m wide and of variable depth, packed

Fig. 5. Fig. 5. Part of the foundations of the apsidal end of Building 2 as revealed in 1995. The majority of the building (in the foreground) had already been lost to development.

with rounded stones (298 and 303), on average around 0.25m across. The foundations truncated three of the postholes from the earlier structure. The building was aligned roughly north-east to south-west, parallel to enclosure ditches 1163 and 1166, although its full extent had already been lost to the development before the 1994–95 excavations. It is likely that the foundations were for a timber-framed or possibly cob-built building since no other structural stonework was recovered. The presence of stone roofing tiles within the fills of a number of surrounding features suggests that the building may have had a stone tile roof. A gully (1240) along the north-western side of the building was interpreted by the excavator as an original overcut of the foundation trench which was then not infilled with cobbles. A soil layer (1236, not shown on plan) was identified against the outside of the south-western wall which contained a number of large stones and some stone roofing tiles and was assumed to be a contemporary occupation deposit.

The presence of two larger, rounded stones, described by the excavator as ‘facing stones’ (shown on Fig. 4B) within the foundations suggest an opening at the south-western end of the building, leading into an apse, which was considered by the excavator to have been a later addition. The apse was around 3m in diameter and of similar construction to the main building with a foundation trench (1119) 0.45m wide and 0.3m deep infilled with rounded stones (1254) which butt against the outer edge of the earlier foundations (Fig. 5) and is again likely to have supported a timber or cob superstructure. If the apse was sited symmetrically it would suggest that Building 2 was originally about 4m wide. Sherds of third-century samian were recovered from the foundations, while mid to late third-century pottery was recovered from demolition rubble (1211 and 1217) within and around the building.

Dating evidence consisted of sherds of fourth-century Black-burnished ware as well as from a late third- to mid fourth-century imitation Black-burnished ware dish, recovered during the 1995 excavations, while the 1996 excavations produced some pottery of first/second-century date.

Immediately to the south-west of the apse a shallow, linear gully (1175) contained sherds of second- and third-century pottery, and may be associated with Building 2, possibly replacing gully 1189.

Building 3 (Fig. 6)

Towards the southern end of Area 1 a cluster of postholes (12, 18, 126, 128, 181, 183, 185, 187, 189, 192), some containing packers, surrounded a setting of stones (124) with evidence of burning, possibly indicating the presence of a hearth (Fig. 6). The postholes ranged in diameter from 0.28m to 0.78m, while only one (189) retained evidence for the size of the post, which in this case was rectangular, measuring 0.30m by 0.25m. Some limited stratigraphy survived, consisting of a layer of firm sandy silt (142) within a shallow scoop (152) with some patches showing possible burning (141 and 143), which may suggest a floor surface. An earlier scoop (191) also showed some signs of burning within the fill. The only find consisted of a sherd of undated Black-burnished ware from scoop 191. It was not possible to identify a pattern amongst the postholes, and assuming that the belong to a structure, they may therefore represent more than one phase of construction. These features extend over an area of at least 25m by 12m, and are

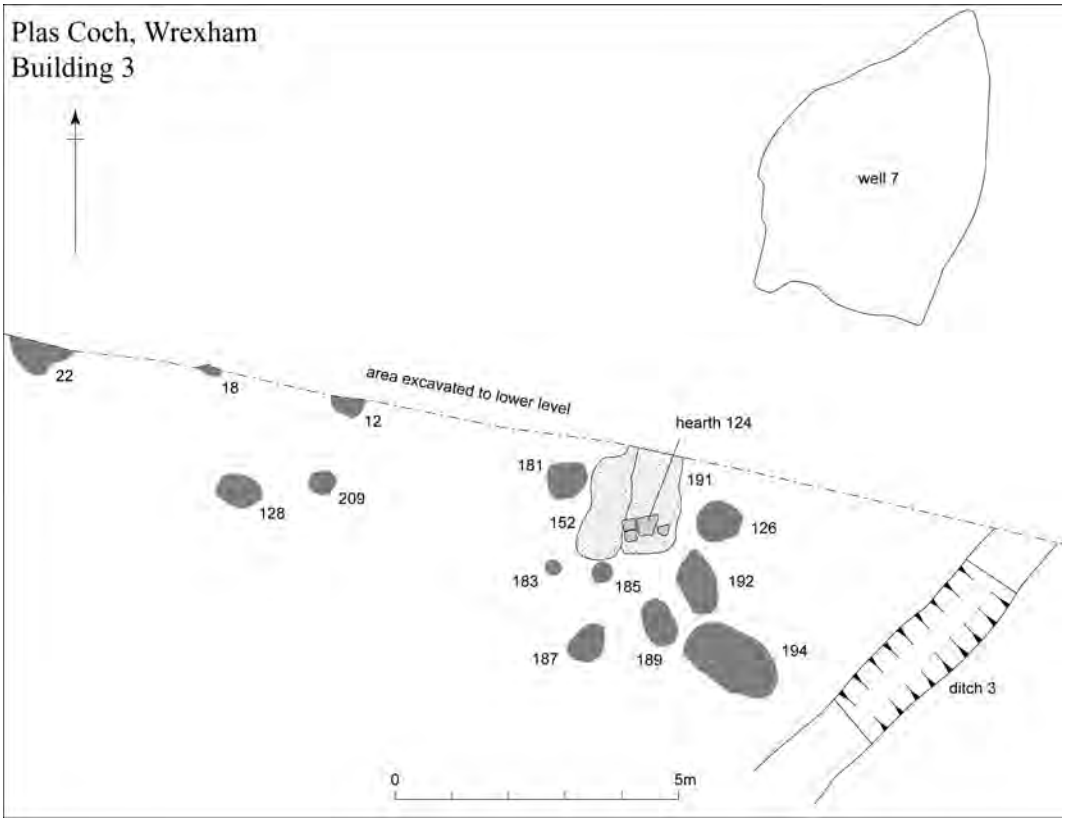

Fig. 6. Plan of the features comprising Building 3.

in close proximity to boundary ditch 3, suggesting a possible structure at right-angles to the ditch extending into the area already removed to a lower level.

A short distance to the south-west, in the corner of Area 1, a small gully (139) was revealed, measuring 4.1m by 1.4m by 0.60m, butt-ended at either end and filled by brown sandy silt. This produced sherds of a second-century greyware beaker (Fig. 13, 63), a first- to second-century redware bowl (Fig. 11, 36) and a first- to mid second-century triple vase (Fig. 10, 6). An adjacent posthole (149) with packing stones, and a small pit or posthole (161) may be associated.

Corn-drying kiln (Fig. 7)

The remains of a corn-drying kiln (132) were excavated in 1994 in Area 1, within the area of an enclosure formed by ditch 16 and aligned parallel to it, presumably being of contemporary date. The kiln only survived below the surface of the natural subsoil, with no trace of the superstructure. The drying chamber (45), which lay at the north-west end, measured 2.5m by 1.6m and was cut 0.4m into the natural clay. A short flue connected this to the stokehole (74), which retained some of the stone lining (215) for the fire-pit, although there was little evidence for burning. The only dating evidence consisted of sherds of samian from the second half of the second century within the fill of the stokehole. A significant quantity of plant remains were recovered from the stokehole, dominated by wheat chaff with smaller amounts of grain (wheat, barley, rye and oats) and weed seeds. It would seem likely that these plant remains largely represent waste material used as fuel, for which heather, or possibly peat, as well as wood were also used.

Fig. 7. Corn-drying kiln (132) viewed from the north-east.

Relatively little plant material was recovered from the drying chamber, although fragments of spelt wheat, rye and barley were all present.

Wells

To the north of Building 3 a large well (7) was partly excavated in 1994 and investigated further in 1996, lying within an area which had been machined before excavations began to a level up to 0.6m below the base of the subsoil. The well shaft was about 5.6m in diameter at the surface of the subsoil and was excavated to a depth of 3.5m without reaching either its base or waterlogged layers. The nature of the fills suggested that there may originally have been a timber lining around 0.8m in diameter, although only the surrounding packing material remained in situ. There was evidence for considerable slumping in the fills, which presumably included subsequent layers which had subsided into the feature, as well as some collapse of the sides. The upper fill (24) contained samian dated 160–200, a Cheshire Plain wide mouthed jar, probably of the second century (Fig. 10, 22) and late third- to fourth-century pottery (Fig. 10, 25) and a developed beaded and flanged bowl of later third- to mid fourth-century date. Lower fills contained a silver denarius struck in AD 79 (Find 1000), a late first- to mid second-century dish imitating a samian form (Fig. 13, 78), a mortarium dated AD 140–180 (Fig. 9, 12) and a range of other pottery of mid to late second-century to third-century date (Fig. 12, 53, 56 and Fig. 13, 65). Soil samples from various layers within the well produced evidence of cereal cultivation, consisting of emmer and spelt wheat, rye, barley and oats, as well as chaff and weed seeds.

A second large well (1201) was excavated in 1996 to the west of Buildings 1 and 2, and outside the ditched enclosure. Overall, the well shaft measured 3.8m by 2.8m and had been lined with clay. The well was excavated to a depth of 1.2m without reaching the base. Pottery recovered from the fills included Hadrianic–Antonine sherds, as well as sherds of more general second-century date, while the upper fill produced a later third- to mid fourth-century Black-burnished ware jar.

A roughly circular feature (110) *c.* 1.38m in diameter, close to the eastern edge of Area 1 may be a third well. The feature, which had vertical sides, was only excavated to a depth of 0.95m, at which point further work became impractical. Finds included samian dated AD 90–110.

Enclosures

A series of linear ditches, some intercutting, defined separate phases of a presumed rectangular enclosure with an entrance along the south-east side and Buildings 1 and 2 set close to the north-west side (Figs 3). The enclosure measured around 40m north-west to south-east by at least 50m, although the majority of it lay outside the excavated areas. Three main phases were evident and while it is tempting to equate these with the construction of Building 1 and the two phases of Building 2 the dating evidence was too limited for this to be confirmed.

The earliest phase was only evident at the southern corner where a short length of butt-ended ditch (179) survived for no more than 0.85m, having been removed elsewhere by later recuts. This was succeeded by a shallow round-bottomed ditch (116 and 153) which was 1.2m wide and survived to a depth of 0.28m, with a butt-end on the south-east side, presumably forming an entrance. Finds included a second-century dish or bowl, later second-century Black-burnished ware and Central Gaulish decorated samian dated to AD 160–190, as well as the head of an iron double-spiked loop (Find 1076). Along the south-west side evidence for the ditch had been removed by a later recut along the same line (106). The north-west side of the enclosure was formed by a narrower ditch (1177), around 0.6m wide and 0.3m deep.

The final phase involved a recutting of the ditch to a more V-shaped profile, following a slightly different course at the southern corner and set up to 2m further to the south-east towards the butt-ended entrance. The recut (106 and 116) was generally 1.3m wide and survived to a depth of 0.36m, filled by

a uniform brown sandy silt. Along the north-western side the recut (1166) followed more or less the same alignment as the original ditch (1177). It was not possible to determine with certainty the relationship between this ditch and ditch 1186. Dating evidence consisted of sherds of Antonine samian, second-century Black-burnished ware and late third- to fourth-century pottery including a Severn Valley Ware wide mouthed jar (Fig. 10, 26) and a Black-burnished ware jar (Fig. 12, 47), as well as fragments of tile and roofing stone, which was assumed to have been derived from Building 2 after it fell into disuse. There was no surviving evidence for a bank associated with any of the ditches.

Two postholes (133 and 135) with collapsed stone packing, including fragments of two querns (from 133), lay between ditches 106 and 116 on the south-west side of the entrance. Neither retained any indication of the size of the posts. Although there was no stratigraphic sequence, it would seem most likely that they are associated with the later ditch (106), presumably forming part of a gated structure to either side of the entrance, lying immediately inside the ditch. The entrance itself retained a remnant of a rough stone surface (145) beneath which lay several shallow scoops (201, 203, 205 and 207). A large roughly circular feature (137) lay just inside the entrance, but with no evidence for its relationship to the enclosure.

Within the enclosure a narrow, right-angled slot (118, 120 and 1163), 0.46m wide and 0.13m deep, lay parallel to enclosure ditches 116, 153 and 1177, at a spacing of 1.2m along the south-west side and 3.8m along the south-east side (Fig. 9). The slot became indistinct along part of the south-east side, possibly suggesting an entrance opposite that in the enclosure. Although the original interpretation, based on evidence from 1994–95, was that this may represent a foundation slot for a timber palisade set within the enclosure evidence from the later excavations demonstrated that the north-west side of the slot (1163) converges with enclosure ditch 1177, suggesting that they may not be contemporary. The only dating evidence came from the north-western side (1163), which produced second-century pottery.

Areas 2 and 3 also contained a similar arrangement of a narrow slot running parallel to a shallow ditch, aligned north-west to south-east. The linear slot (251 and 1207) measured up to 0.45m wide and 0.2m deep, and was filled by a grey-brown silty clay which contained a significant quantity of rounded stones up to 0.3m across. The ditch (85 and 1186) lay 1.3m to the south-west, measuring 0.8m across and up to 0.43m deep. Neither produced any dating evidence during the 1994–95 excavations, although ditch 85 did contain a small plain bronze brooch (Find 1098). However, the later excavations concluded that the feature was post-medieval in date on the basis some pottery recovered from the south-eastern end of the ditch, which also contained first- to second-century and third-century pottery. Although both the slot and the ditch clearly had a physical relationship with ditch 1166 and slot 1163, which formed the north-western side of the enclosure, the site archive contained no information with which to elucidate this.

Boundary ditches

A series of linear ditches were identified in Areas 1 and 2, representing at least two phases of presumed field boundaries, some of which clearly respected the alignment and position of the rectangular enclosure and suggest the presence of a trackway along the south-western side of the enclosure. The opposing side of the track was formed by a boundary a ditch (16), 1.2m wide and 0.4m deep, lying around 12.5m away from the enclosure and extending into an area already taken to a lower level by the developers. Ditch 43 presented a different alignment suggesting a splayed entrance formed by this and ditch 9. Although the south-eastern end of the ditch had been lost, the traces which still survived suggested two phases, one (43) on a slightly different alignment, and that both were butt-ended. The brown sandy silts filling both ditches were indistinguishable, making it impossible to determine the relationship between ditches 16 and 43, or the dimensions of the latter. The primary fill of ditch 16 contained an early to mid second-century mortarium rim, while the upper fill produced a coin of Commodus dated AD 180–192 (Find 1099), together with sherds of Antonine samian, mortaria dated AD 190–230 and AD 240–350 (Fig. 9, 7 and 9),

a first- or early second-century Cheshire Plain bowl (Fig. 11, 35), as well as second-century (Fig. 12, 52) and late third- to mid fourth-century Black-burnished ware (Fig. 13, 61). There was some evidence for the partial recutting of ditch 16 as two short, butt ended gullies (1106 and 1107), the fills of which produced sherds of early and mid to late third-century Black-burnished ware and an early third-century Nene Valley indented beaker. A small, rectangular pit (41) within the trackway and close to the entrance had no obvious function.

The boundary continued as ditch 9, which had a different form and was on a different alignment, forming an entrance with an outward splay, extending into the trackway. Finds included sherds of Antonine samian as well as mortaria dated AD 230–300 (Fig. 9, 8), a third-century Severn Valley Ware jar (Fig. 10, 10) and early to mid fourth-century Black-burnished ware, together with an iron stylus. At the south-eastern end of ditch 9, which was 12.4m long, 1.5m wide and 0.66m deep, the boundary reverted to a form and direction similar to ditch 16, continuing for a further 12.1m as ditch 58. Although a relationship clearly existed between ditches 58 and 9, careful excavation failed to reveal its nature.

At the south-east end of the boundary an entrance 3.8m wide was indicated by butt-ended ditches 58 and 95. Both ditches were *c.* 0.8m wide and 0.35m deep, filled largely by brown sandy silt and contained sherds of mid/late second-century samian and third/fourth-century pottery respectively, including jars (Fig. 10, 14, 18 and Fig. 13, 66). A group of postholes (1079, 1081, 1083, 1092) at either side of the entrance suggested a gate which may have been hung on the south-east side, as well as indicating the former presence of a bank along the south-west side of the boundary.

A second boundary (3) up to 1.3m wide and 0.5m deep, filled by dark brown sandy silt, lay at right-angles to the trackway, dividing the area to the south-west into two fields, each with its own entrance. The ditch contained a significant quantity of mortaria ranging in date between AD 180 and 230 (Fig. 9, 1–5) as well as sherds of samian dated AD 160–200, second-century Black-burnished ware (Fig. 13, 64) and other pottery of third/fourth-century date including a bowl (Fig. 11, 40), SVW jars (Fig. 10, 13 and 16–17) and Black burnished ware and similar (Fig. 12, 44–6, 58–9, Fig. 13, 62 and 70). The ditch had been partly destroyed prior to excavation, but the position of a shallow butt-ended gully (31) suggests a continuation of the ditch to within 2.2m of ditch 9, the gap indicating the presence of a bank.

Area 2 contained further ditches respecting the same general north-east to south-west alignment evident in Area 1 and presumed to represent a continuation of the system of field boundaries. The ditches in Area 2 follow two distinct alignments, but with no clear indication of their relationship. At the western end of the area ditch 79 followed a roughly north-south alignment. Three sections were excavated across the ditch, revealing a generally rounded profile up to 1.4m wide and 0.4m deep, filled with a dark brown sandy silt. Sherds of Antonine samian were recovered from the fill, together with a jar of Antonine to third-century date (Fig. 10, 9), and a late first/early-second-century bronze brooch (Find 1013).

Ditch 169 followed a more north-east to south-west alignment, similar to ditch 3 in Area 1, becoming less distinct towards the south-west, and cut by ditch 85 and slot 251. The ditch had a generally rounded profile up to 0.85m wide and 0.4m deep, filled by a yellow-brown sandy silt and containing sherds of samian dated AD 100–120.

In the north-east corner of Area 2 a third ditch (166), was aligned at right angles to ditch 169. The ditch was around 1.6m wide and 1.5m deep and had been cut through a large pit (256). Both features had been cut through the fill of what now appears to be the edge of a pond, although this was not apparent at the time. When the development began a small pond, just outside the excavated area, was filled and levelled, although its original extent was somewhat larger. Limited investigations were conducted in 1996 within Area 3, which identified post-medieval material in the upper fills.

The dating evidence for these features is rather similar, as well as varied, both containing earlier and later pottery. The earlier pit (256) contained samian dated to AD 170–200, a mortarium from the first half

of the second century (Fig. 9, 13), as well as early to mid fourth-century Black-burnished ware (Fig. 12, 55). The ditch (166) contained samian of similar date range, together with mortaria dated AD 240–350 (Fig. 9, 11), third/fourth-century Severn Valley Ware jars (Fig. 10, 11–12), late third/mid fourth-century pottery (Fig. 12, 50, 54 and Fig. 13, 72) a coin of Marcus Aurelius (Find 2020) dated AD 177–192. The ditch fills also contained a quantity of brick and tile, including two complete imbrexes. Given the distance of 65m from buildings 1 and 2 this may suggest the presence of another building in the immediate area, which could account for the significant quantity of late third- and fourth-century pottery. The pond (280) contained samian of Flavian date as well as some dated AD 170–200 and late third/early fourth-century Black-burnished ware (Fig. 12, 49).

A second broad ditch (162), similar to 166 and located immediately to the north-east, had been identified in an exposed section during the first phase of excavation. However, while its form and location suggested that it may have been parallel to 166 it lay beyond the limit of Area 2 and consequently this could not be confirmed.

Miscellaneous features

A number of features were excavated for which no interpretation has been possible. These included a number pits, one of which (56) produced a form 37 samian bowl, dated *c.* 155–175 AD (Fig. 8, 1), together with an adze hammer (Find 1017) and a fragment of an iron nailed binding (Find 1016). Adjacent to this was a second feature (14) mostly already destroyed by the developers, but with evidence for it having had edge-set stones as a lining around the base. Finds included sherds of mortaria dated AD 140–180. Pit 41 (2.05m by 1.08m by 0.4m) showed some evidence for insitu burning and its fill (76) contained a first/second-century mortar-like bowl (Fig. 11, 34). Pit 108 (1.78m by 0.8m by 0.65m) produced sherds of mortaria dated AD 240–350 (Fig. 9, 10).

FINDS

As noted above, the following finds reports largely focus on the material from the 1994–95 owing to the unavailability of information relating to the later excavations at the time this report was prepared.

PREHISTORIC POTTERY[2]

By Alex Gibson

Pit 285 (Area 2)

871g of pottery was submitted to the writer for analysis. The majority of the material comprised small featureless and undecorated sherds in a light grey-brown fabric with abundant large calcined rock inclusions reaching up to 6mm across. The angularity of these inclusions indicate that they were deliberately crushed and added to the fabric as opening agents. Where both surfaces survive, the fabric is in the region of 1mm thick. It is evenly and well-fired and has a slightly laminated texture resulting from the manufacturing process. Ring or coil-breaks are readily visible within the assemblage attesting the hand-building of the vessel. The rim sherds which survive within the assemblage are everted and thickened with a rounded profile. Once again, coil or ring-breaks are evident, particularly on the interior of the rim indicating that the rim itself has been formed from a single coil. The diameter of the rim is difficult to estimate given the unevenness of the surviving sherds, but it may well have been in excess of 300mm. The larger of the surviving body sherds suggest a bipartite vessel. Some sherds exhibit external

concavity indicative of a shallow, possibly elongated, neck. Other thickening sherds suggest a straight body profile towards the base. These indicators suggest a large jar-like vessel with an everted rim, concave neck and straight, trunconic body. Sherd evidence of this type without diagnostic decoration or formal features is notoriously difficult to date but nevertheless vessels of this shape and with similar fabric mixes may be paralleled in the middle and later Bronze Age assemblages of the Severn Valley and the Marches. Direct parallels may be found in the Breiddin material (Musson 1991) as well as amongst the local Middle Bronze Age material from Bromfield in Shropshire (Stanford 1982) and Four Crosses, Powys (Warrilow *et al.* 1986). Similar material has also been excavated from a house site at Glanfeinion, Powys (Britnell *et al.* 1997) providing radiocarbon dates of *c.* 1400–1200 cal. BC. Finer sherds with less coarse opening agents may well belong to a second vessel or else represent poor clay mixing in the same pot.

Soil layer 163 (base of modern ploughsoil, Area 2)
Six sherds (16g) in a fabric similar to the above, but finer and with redder outer surfaces. The sherds also contain large deliberately added opening materials and are similar in technological aspects to the material discussed above.

FLINTWORK
By Alex Gibson

A few pieces of worked flint and chert were recovered from the 1994–95 excavations and several more from 1996, although the latter are not described.

1. Side and end scraper in a grey mottled flint with dorsal cortex remaining. The bulb and striking platform are intact. The retouch is confined to the end and right hand side. It is steeply angled at the end and less so on the side. Both edges are badly damaged from use. The scraper is squat, measuring 29mm long and 28mm wide. Scrapers of this type are a long-lived tool type and consequently are difficult to date, having currency throughout the Neolithic and Bronze Age. Not illustrated. Fill of ditch 3 (4).
2. Utilised flake in black flint, triangular with traces of utilisation along one edge, although no retouch. Traces of the bulb are still visible on the pointed end. Not illustrated. Fill of ditch 82 (78).

A further six fragments of flint and 9 of chert were recovered, two of which show signs of possible working, while the remainder are probably natural.

COINS
By Mark Walters

Four coins were recovered from the 1994–95 excavations (nos 1–4). A further 36 coins (nos 5–40) were recovered from the general area of the site by detectorists prior to excavation.

1. Ar denarius, Nerva, struck AD 97. Obverse, laureate bust right, IMP NERVA CAES AVG PM TRP COS III PP. Reverse, Clasped hands, CONCORDIA EXERCITVVM. Very slightly worn/very slightly worn. Diam. (max.) 17.5mm, die axis 6. Ref. RIC 2, RSC 1. Find 1000, fill of well 7 (26).

2. As, Commodus, AD 180–192, possibly a contemporary forgery. Obverse, laureate head, illegible. Reverse, Genius standing left holding patera and cornucopia, small figure at feet in left field, S-C in fields. Diam. (max.) 26mm, die axis 6. Ref. RIC 518. Worn/worn. Find 1099, fill of boundary ditch 16 (17).
3. As, Marcus Aurelius, AD 177–192, commemorative issue struck under Commodus. Obverse bare-headed bust to right, DIVVS M AN[TONINVS] PIVS. Reverse funeral pyre surmounted by Aurelius in quadriga, [CONSE]C[RATIO], S-C in fields. Diam. (max.) 30mm, die axis 5. Ref. copy as RIC 1366 (Sestertius). Worn/very worn. Find 2020, fill of ditch 166 (168).
4. Unidentifiable contemporary bronze coin, probably a radiate copy AD 276–282, or copy of fourth century. Obverse, illegible legend and offstruck, part of crude head to right. Reverse, eagle on standard or 'hand of god' presenting wreath from sky (a fourth-century type), illegible legend. Diam. (max.) 11mm. Worn/worn for issue. Find 1023, fill of modern drain 104 (105).
5. Sestertius, Faustina Senior, struck under Antoninus Pius AD 141–161. Obverse [D]IVA FAUSTIN[A] her draped bust r. Reverse, draped figure standing l., r. hand outstretched, spear/sceptre in l. hand, possibly (IVNO S-C), Juno standing l. holding patera and sceptre. Diam. 33m, die axis 12. Ref. as RIC. 1143.
6. Ae as, ? first/second-century AD. Obverse and reverse illegible. Diam. 26mm.
7. Sestertius, Hadrian, AD 117–138. Obverse, his draped laureate head r., illegible legend. Reverse [AEQUITAS AVG] [S]-C in field, equity standing l. Diam. 29.5mm, die axis 6. Ref. as RIC. 743.
8. Ae as, Crispina, AD 177–180. Obverse, her draped head r., [CR]ISPI[NA] [AVGVSTA]. Reverse, figure standing l. holding sceptre, illegible legend, but probably [VENUS FELIX]. Diam. 29mm, die axis 12. Ref. as RIC. 686.
9. Ae as, Antoninus Pius, AD 138–161. Obverse, his laureate head r., (ANTININVS A)VG - PIVS [—-]. Reverse, draped female figure standing l., illegible legend. Diam. 23mm, die axis 11. Ref. as RIC. 1196.
10. Ae as, ? first/second-century AD. Obverse and reverse illegible. Diam. 26.5mm.
11. Irregular radiate copy, Tetricus I, AD 276–286. Obverse, bearded radiate head r., offstruck on small flan. Reverse, crude figure standing l., [—-]S before, offstruck on small flan. Diam. 12mm, die axis 2.
12. Sestertius, Hadrian, AD 117–138. Obverse, his draped laureate bust r., illegible legend. Reverse, illegible legend but either RESTITUTOR HISPANIAE or RESTITUTOR ORBIS TERRARUM S-C, Hadrian standing l. raising a kneeling figure. Diam. 29mm, die axis 5. Ref. as RIC. 954/594a.
13. Sestertius (irregular), Antoninus Pius, AD 138–161. Obverse, bearded draped head r., illegible legend. Reverse, female figure standing l. holding cornucopia with r. hand outstretched, S-C in field, crude legend and figure details. Diam. 28.5mm, die axis 10/11.
14. Sestertius, Trajan/Hadrian, AD 98–138. Obverse, head r. illegible legend. Reverse, fortune standing l. holding cornucopia and leaning on rudder. Diam. 32mm, die axis 6.
15. Dupondius, Faustina Junior, struck under Marcus Aurelius AD 161–180. Obverse, her draped bust r., [F]AUSTINA AVGVSTA. Reverse, Faustina standing l. amongst four children at her feet and holding two more in her arms, [TEMPOR] - FELIC. S-C in field. Diam. 26mm, die axis 6. Ref. as RIC. 1675.
16. Ar denarius, Mark Antony, 44–28 BC. Obverse illegible. Reverse galley to r., illegible legend. Ref. as RSC.1. Mark Antony 26–65. Diam. 18mm.
17. Ae as, Domitian, AD 81–96. Obverse, his laureate draped, bust r., illegible legend. Reverse, victory adv. l. brandishing spear and leaning on shield, [——] [-]PQ[-] COS III [—-], [S]-C in fields. Diam. 24mm, die axis 5.
18. Ae as, Flavian. Obverse, head to r. [——] AVG [-] TR[P] [C]OS VI [—-]. Reverse, figure standing l. leaning on shield, illegible legend, [S]-C in field. Diam. 22mm, die axis 6.

19. Ar denarius, Trajan, struck AD 112–117. Obverse, his laureate head r. [IMP TRA]IANO AVG GER DAC [PM TR P COS VI]. Reverse, draped figure l. holding cornucopia, r. hand outstretched, COS VI [——-]. Diam. 19.5mm, die axis 7. Ref. as RSC.2.109.
20. Ae as, Faustina Junior, struck under Marcus Aurelius AD 161–180. Obverse, her draped head r., [FAUSTINA] AVG [——]. Reverse, figure standing l., illegible legend. Diam. 24.5mm, die axis 6. Ref. as RIC. 1398.
21. Sestertius, Trajan, AD 98–117. Obverse, his laureate draped bust r., illegible legend. Reverse, Ceres (?) standing l. modius at feet, [SPQR] OPTIMO PRINC[IPI], S-C in field. Diam. 35mm, die axis 7. Ref. as RIC. 479
22. Ae dupondius, first/second-century AD. Obverse and reverse illegible. Diam. 26mm.
23. Ae dupondius/as, first/second-century AD. Obverse and reverse illegible. Diam. 23.5mm.
24. Sestertius, first/second-century AD. Obverse and reverse illegible. Diam. 32mm.
25. Dupondius/as, ? first/second-century AD. Obverse and reverse illegible. Diam. 26mm.
26. Dupondius/as, ? first/second-century AD. Obverse and reverse illegible. Diam. 28mm.
27. Dupondius, Faustina Senior, struck under Antoninus Pius AD 141–161. Obverse her draped bust r., [DIVA] FAV[STINA]. Reverse illegible. Diam. 28mm.
28. Core of Ar plated denarius. Obverse and reverse illegible. Diam. 20mm.
29. Sestertius/dupondius, ?AD 138–161. Obverse, bearded head r. (probably Antoninus Pius), illegible legend. Reverse illegible. Diam. 28mm.
30. Ar denarius. Obverse and reverse illegible. Diam. 19mm.
31. Dupondius, Domitian, AD 81–96. Obverse, his draped laureate bust r., illegible legend. Reverse illegible. Diam. 31.5mm.
32. Sestertius, ? first/second-century century AD. Obverse and reverse illegible. Diam. 33mm.
33. Ae as, Flavian, AD 79–96. obverse, head r., illegible legend. Reverse illegible. Diam. 26mm.
34. Sestertius/dupondius, ?AD 138–161. Obverse, bearded head r. (probably Antoninus Pius), illegible legend. Reverse illegible. Diam. 28mm.
35. Sestertius, Commodus, ?AD 177–192. Obverse, bearded head r., illegible legend. Reverse, female figure standing l., illegible legend. Diam. 30.2mm, die axis 6.
36. Dupondius/as, ? first/second-century AD. Obverse and reverse illegible. Diam. 26mm.
37. Dupondius/as, ? first/second-century AD. Obverse and reverse illegible. Diam. 26mm.
38. Dupondius/as, ? first/second-century AD. Obverse and reverse illegible. Diam. 22.8mm.
39. Dupondius/as, ? first/second-century AD. Obverse and reverse illegible. Diam. 26.5mm.
40. Ae as, ? first/second-century AD. Obverse, possibly female head to r., illegible legend. Reverse illegible. Diam. 24mm.

SAMIAN

By Peter V. Webster

A complete catalogue of the samian is included in the site archive. In view of the relatively small number of sherds and the often poor quality of the samian recovered (reflecting adverse soil conditions) the collection is only considered in summary form here.[3] The identifiable forms and sources are summarised in Table 1. This shows a relatively small number of sherds (16%) of South Gaulish importation from the period (*c.* AD 75–110), while the majority (73%) are of Central Gaulish (mainly Lezoux) manufacture, ranging in date from Hadrianic to the end of the second century.

Table 1. Samian forms and sources (no. of sherds)

Form	South Gaul	Les Matres	Central Gaul	East Gaul	Total	Approx. date range
18	2	–	–	–	2	75–95
18/31	5	2	–	–	7	90–120
18/31R	3	–	–	–	3	90–110
31	–	–	18	13	31	mid 2nd-mid 3rd
31R	–	–	9	–	9	160–200
33	–	–	13	1	14	150–200
36	1	–	3	–	4	
37	10	–	–	–	10	Flavian–110
37	–	1	–	–	1	100–120
37	–	–	35	–	35	Hadrian–190
38	–	–	8	–	8	Antonine
38	–	–	–	1	1	150–200
45	–	–	11	–	11	170–200
Bowl	1	–	2	–	3	
Curle 23	–	–	2	–	2	2nd century
Mortarium	–	–	2	–	2	170–200
Total	22	3	103	15	143	

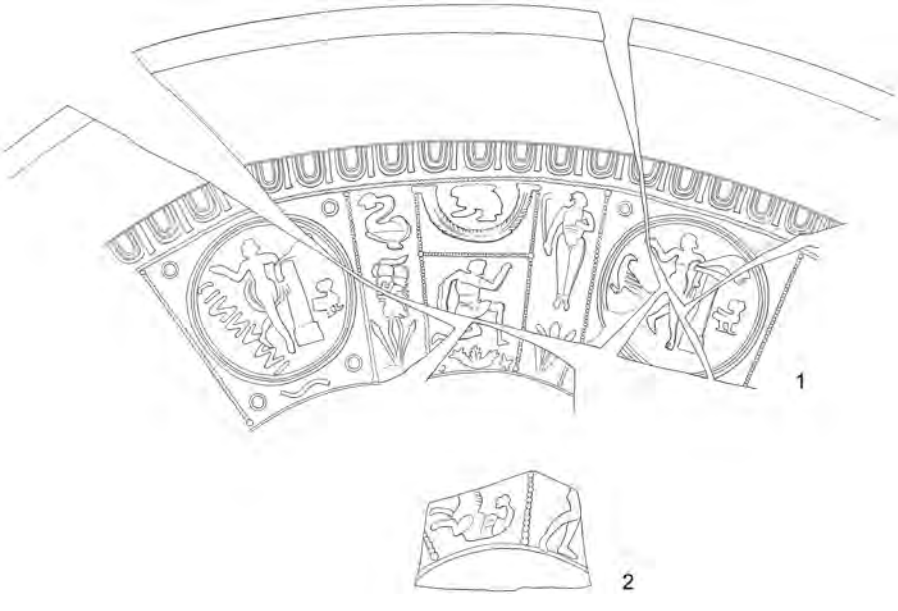

Fig. 8. Decorated samian form 37 bowl. Scale 1:3.

The 1994–95 excavations produced several sherds from decorated vessels, of which the following are of particular note (Fig. 8).

1. Form 37, Central Gaul. Nearly complete but somewhat abraded bowl stamped by Cinnamus (Fig. 8; see Stamp 1 below). The ovolo is Rogers B145 (Rogers 1974; Cinnamus ovolo 4 of S&S). The decoration is in the form of panels separated by beaded borders as follows: (a) large double-bordered medallion contains the stamp CINNAMI retrograde (cf. S&S, pl. 169, first column, centre), Venus, O.322 and owl, O.2331. The corners of the panel contain small circles with the bottom centre occupied by the small snake-like ornament, S&S, fig. 47, 19 (Rogers U248); (b) dolphin (possibly O.2382) placed vertically over the mask, O.1214, itself over a stylised triple leaf (perhaps a finer imprint of S&S, fig. 47, 32); (c) wreathed festoon, Rogers F40, is pendant from poorly defined astragali (possibly part of the poinçon) and contains a hare, probably O.2116. The whole panel is over: (d) kneeling man, O.204, over triple acanthus leaves, probably Rogers K12; (e) Pan, O.711a, over a poorly defined, stylised triple leaf of the same general type as that used in (b) above; (f) as (a), except that the name stamp is replaced by a bird, O.2297. The panels are positioned a-b-c-d-e, followed by f-b-c-d-e repeated three times.

   S&S illustrate similar work by Cinnamus without showing this exact design. The large medallion is closely similar to that in S&S pl. 162, 59; the Pan appears similarly placed in a narrow panel S&S, pl. 158, 21; and the hare appears in S&S pl. 157, 7. Hartley (1972, 49) suggests that ovolo 4 of Cinnamus came into use at approximately the same time as ovolo 1, an event he dates to *c.* AD 155. This would allow us to date the manufacture of the Plas Coch bowl to *c.* AD 155–175. Fill of pit 56 (103).
2. Form 37, Central Gaul. A fragment from the lower part of a panel decorated bowl, divided by a neat but solid bead row. The panel to the left shows part of a sea horse, a smaller version of O.33, while that to the right has the lower part of a human figure, probably O.638 (Fig. 8). Both figures appear in the work of Casurius and could even be from the same mould as the fragment illustrated in S&S 1958, pl. 133, 20. The sea horse is illustrated by Stanfield (1935, pl. IX, 37). Fill of modern drain 104 (105), *c.* AD 160–195.
3. Form 37, burnt and worn but probably Central Gaul. The very abraded design comes from the bottom of the decoration and shows a portion of a winding scroll, the lower lobe of which contains a double medallion placed above a running dog (?). The style is similar to that of S&S, pl. 167, 61, but this is not the Cinnamus dog used there. Antonine. Fill of boundary ditch 9 (10). Not illustrated.
4. Form 37 Central Gaul. An abraded piece showing panel decoration divided by wavy line borders. The squarish ovolo with diagonally slashed tongue is not dissimilar to one used by Iullinus, but he does not use this type of border. The only panel with discernible decoration contains a fragment of a figure which may be O.571. Antonine. Fill of boundary ditch 16 (30). Not illustrated.
5. Form 37, Central Gaul. Fragment of a small bowl showing an ovolo, possibly Cinnamus ovolo 5 (S&S, fig. 47), over a border of large beads. Antonine. Fill of enclosure ditch 106 (107). Not illustrated.
6. Form 37, Les Martres-de-Veyre. Small fragment with fragmentary wreathed festoon, below a wavy line border with 9- or 10-petal rosette with disc centre masking a probable border junction. The Potter of the Rosette would be a possible maker. *c.* AD 100–120. Fill of boundary ditch 169 (170). Not illustrated.

SAMIAN POTTERS' STAMPS
By Brenda M. Dickinson

Two samian potters' stamps were recovered from the 1994–95 excavations.[4]

1. Form 37, Central Gaul. Stamped CINNAMI retr. Cinnamus ii of Lezoux, Die 5b (Walke 1965, taf. 39, 11). This common label stamp of Cinnamus occurs frequently both in Antonine Scotland and at forts on Hadrian's Wall, but is slightly more common in Scotland. This suggests a date of AD 155–175. Fill of pit 56 (103).
2. Form 31, East Gaul, stamped VICToRINVSF, with IN ligatured. Victorinus ii of Rheinzabern, Die 4q (Ludowici 1927, 233, a). Victorinus ii's plainware stamps occur at Niederbieber, a site founded in the late second century, and his decorated ware is amongst the latest to have been made at Rheinzabern. Early/mid third-century. Fill of boundary ditch 16 (28).

MORTARIA (Fig. 9)
By Kay F. Hartley

The assemblage of 97 sherds (5,383g) from the 1994–95 excavations is a considerable total to result from limited excavation on a minor settlement.[5]

The substantial size of the sherds is notable, as is the amount surviving of individual mortaria (e.g. six mortaria with 15% of rim surviving, one with 42% and another with 66%). If only rim sherds are considered, they represent a minimum of twenty vessels, fifteen of which are attributable to the Mancetter-Hartshill potteries. One vessel is possibly from Chester, and four are from other sources in North Wales, the Cheshire Plain (including Wilderspool) and perhaps even Wroxeter (vessels from these other sources include two 'Raetian'-type mortaria, probably from Chester or Wilderspool). This small number from other sources can be increased to eight if vessels represented only by body or base sherds are counted. Probably two such mortaria are attributable to the legionary pottery at Holt. There are body and base sherds, too, in the Mancetter-Hartshill fabric which are not from the vessels represented by rim sherds, but it would be difficult to give an exact number.

All the mortaria which are not from Mancetter are second-century in date. This is not surprising since all the available evidence suggests that production of mortaria had ceased in all the workshops in North Wales and the Cheshire Plain by the end of the second century. Mancetter-Hartshill mortaria only became common in north Wales and at Chester in the late second to early third centuries, and all fifteen vessels represented by the rim sherds are forms which were made after the practice of stamping ceased. One or two could possibly be very late second century, but it is more likely that the earliest are of third-century date. At least five of the vesssels form a group, probably contemporary; all have a mixture of trituration grit which is so unusual for these potteries after the mid second century that this is the first time when I have seen it in mortaria of a much later date (refer to fabric RO10v for details of grit). Three of the mortaria are triple-reeded and two are four-reeded; these are linked together by similarities in the style of reeding. None of the variant rim profiles present are likely to be earlier than AD 190, and if taken as a near contemporary group, it would have to be third-century, not earlier than AD 220–230. Crude versions of these forms were made after *c.* AD 180, but they were most commonly made in the early third century. Of the remaining ten Mancetter-Hartshill mortaria, only one (a tiny hammerhead, not illustrated) can safely be attributed to the fourth century, and seven could be either third- or fourth-century. A detailed catalogue of the mortaria is housed with the site archive.

Mortaria fabrics/sources

Each sherd has been assigned to a fabric type according to the Clwyd-Powys Archaeological Trust's Roman Pottery Fabric Type Series, from which the following fabrics have been identified.

RO1 Holt, Denbighshire. A fine-textured orange fabric, normally fairly hard, powdery only after deterioration. Inclusions: rare to moderate well-sorted quartz and rare black or dark brown material. Trituration grit: white quartz, frequent and vari-sized. Self coloured. (Example not illustrated.)

RO10 Mancetter-Hartshill, a usually fine-textured, cream fabric, varying from softish to very hard, sometimes with pink core. Inclusions usually moderate, smallish, transparent and translucent white and pinkish quartz with sparse opaque orange-brown fragments and sometimes white clay pellets (re-fired pottery?). The range in fabric is, in fact, quite wide, from that with scarcely any inclusions to fabrics with a fair quantity and fabrics with hard, ill-sorted black inclusions. The trituration grit after the mid second century consisted of hard red-brown and/or hard blackish, re-fired pottery fragments (D. P. S. Peacock and D. F. Williams pers. comm.) with only rare quartz and sandstone fragments. Earlier mortaria usually have a mixed trituration grit in which quartz and sandstone are normal components and some early second-century mortaria probably have entirely quartz trituration grit.

RO10v. This variant is covered in a sense by RO10; its unusual feature is that trituration grit which would be normal enough in early second-century mortaria, has been used in mortaria dated to the early third century when trituration grit used in these potteries was always composed of hard red-brown and/or blackish argillaceous material. The trituration grit in RO10v is composed mainly of various sandstones (including quartz sandstone) with fairly uncommon quartz, rare black and flint.

RO12 North Wales or Cheshire Plain. Orange-brown, often with a grey core; extreme examples may shade from a brownish-pink to soft grey or have a sandwich effect of brownish-grey with an inner core of orange-brown. Extreme examples of the fabric can be friable and ashy in texture. Although the fabric can have a powdery surface, there is usually enough sand in the clay to give a slightly abrasive quality. Inclusions: fairly frequent to moderate ill-sorted quartz, mostly sub-rounded, with rare red-brown sandstone and black material. Trituration grit: mainly angular, ill-sorted quartz often with a hackly fracture, occasional flecks of gold mica both alone and contained within the quartz; rare grits of hard black material. All known mortaria have traces of a cream slip. (Example not illustrated.)

RO13 Wroxeter or perhaps the Cheshire Plain. Softish fine orange-brown to brownish-pink fabric with paler surface. Inclusions: moderate ill-sorted quartz, a little black material and rare red-brown material. Trituration grit: included quartz, red-brown sandstone and black material. Self-coloured or with a brown slip. (Example not illustrated.)

RO16 Probably Cheshire Plain or Wales. Moderately hard, fine, red-brown micaceous fabric. Inclusions: ill-sorted and sub-rounded quartz and rare red-brown material. Trituration grit: included quartz. Self-coloured. (Example not illustrated.)

RO26 North Wales or the Cheshire Plain. Moderately hard, abrasive, bright orange fabric. Inclusions: fairly frequent and well sorted small quartz as well as grey and black inclusions and gold mica. Trituration grit: mostly quartz with rare red-brown soft siltstone (?) and black material. Cream slip. Perhaps sometimes self-coloured. (Example not illustrated.)

RO29 Wilderspool. Hard orange-brown fabric with grey core. Slightly abrasive surface. Inclusions: abundant quartz. Trituration grit: mixed quartz and sandstone. This example had matt self-coloured slip in place of the red slip normal on a 'Raetian' form.

RO31 Probably from Chester. Orange-brown fabric with sufficient backround sand content to make it slightly abrasive. No slip survives on example but would have been either 'Raetian' red slip or self-coloured. Inclusions: fairly frequent, tiny to small, but ill-sorted, subrounded quartz, opaque black material (probably iron slag). Inclusions barely visible without magnification. Trituration grit: quartz and pale brown sandstone survives on sherd.

RO32 North Wales, possibly Holt. Very fine-textured, dark red fabric with well-defined blackish core. Self-coloured slip on sherd. Inclusions: moderate, ill sorted, but tiny, quartz, red-brown and black (both probably slag). Trituration: white quartz. (Example not illustrated.)

1. Diam. 23cm (42% rim). Fabric RO10v. Mancetter-Hartshill potteries. About a third of this mortarium survives. Its triple-beaded upright rim is not far from being wall-sided; the finger-depression spout is slighter than in no. 2. The use of this form can be dated within the period AD 180–230 and it best fits a date in the early third century. The trituration grit (red-brown and pale brown sandstone, quartz and grey material) is exceptional for these potteries after the middle of the second century, but there is no question of an earlier date. Fill of boundary ditch 3 (4).
2. Diam. 34cm (66% rim). Fabric RO10. Mancetter-Hartshill potteries. The greater part of this mortarium survives; it was probably discarded not because of normal breakage but because it was so heavily worn that the centre of the base fell out. It is a hammerhead form with four large, fairly well-rounded beads and a well-formed, finger-depression spout. Four-beaded hammerheads were first made in the late second century, but the optimum date for this example is early third-century, perhaps AD 200–230. The fabric is softish and much of the red-brown painted decoration on the rim has disintegrated. Fill of boundary ditch 3 (4).
3. Diam. 28cm (13% rim). Fabric RO10v. Mancetter-Hartshill potteries. A four-reeded, near upright rim. Mortarium with four reeds were first made in these potteries in the late second century (AD 180–200), but they were very rare and the beads very convex and rounded until the third century. Although they probably continued to be made as long as the industry continued, they were, like the triple reed, never common. When multi-reeded mortaria began to be made sometime in the first half of the third century, probably *c*. AD 220, they rapidly overtook both triple- and four-reeded types in popularity, perhaps being easier to make. This example has exactly the same, unusual, trituration grit as no. 1 and may well be a contemporary product of the same potter. Fill of boundary ditch 3 (4).
4. Diam. 27cm (8% rim). Fabric RO10v? (no trituration grit survives). A four-reeded mortarium of very similar type to no. 3, but from a different vessel. The bold, deeply moulded, widely separated reeds and upright form, which both mortaria have, are not common among Mancetter products and this example can probably be attributed to the same date and the same potter. Fill of boundary ditch 3 (4).
5. Diam. 27cm (8% rim). Fabric RO10v. A triple-reeded, upright rim with the reeds moulded in the same way as nos 3 and 4 and probably made by the same potter or in the same workshop in the Mancetter-Hartshill potteries. *c*. AD 200–230. Fill of boundary ditch 3 (4).
6. Diam. 36cm (19% rim). Fabric RO10. Mancetter-Hartshill potteries. An irregularly reeded hammerhead mortarium with double chevron design in red-brown paint on the rim. Worn. A fragment of the lower part of a finger-depression spout from this vessel survives (not shown in illustration). Probably third-century, certainly later than AD 230. Fill of boundary ditch 16 (17).

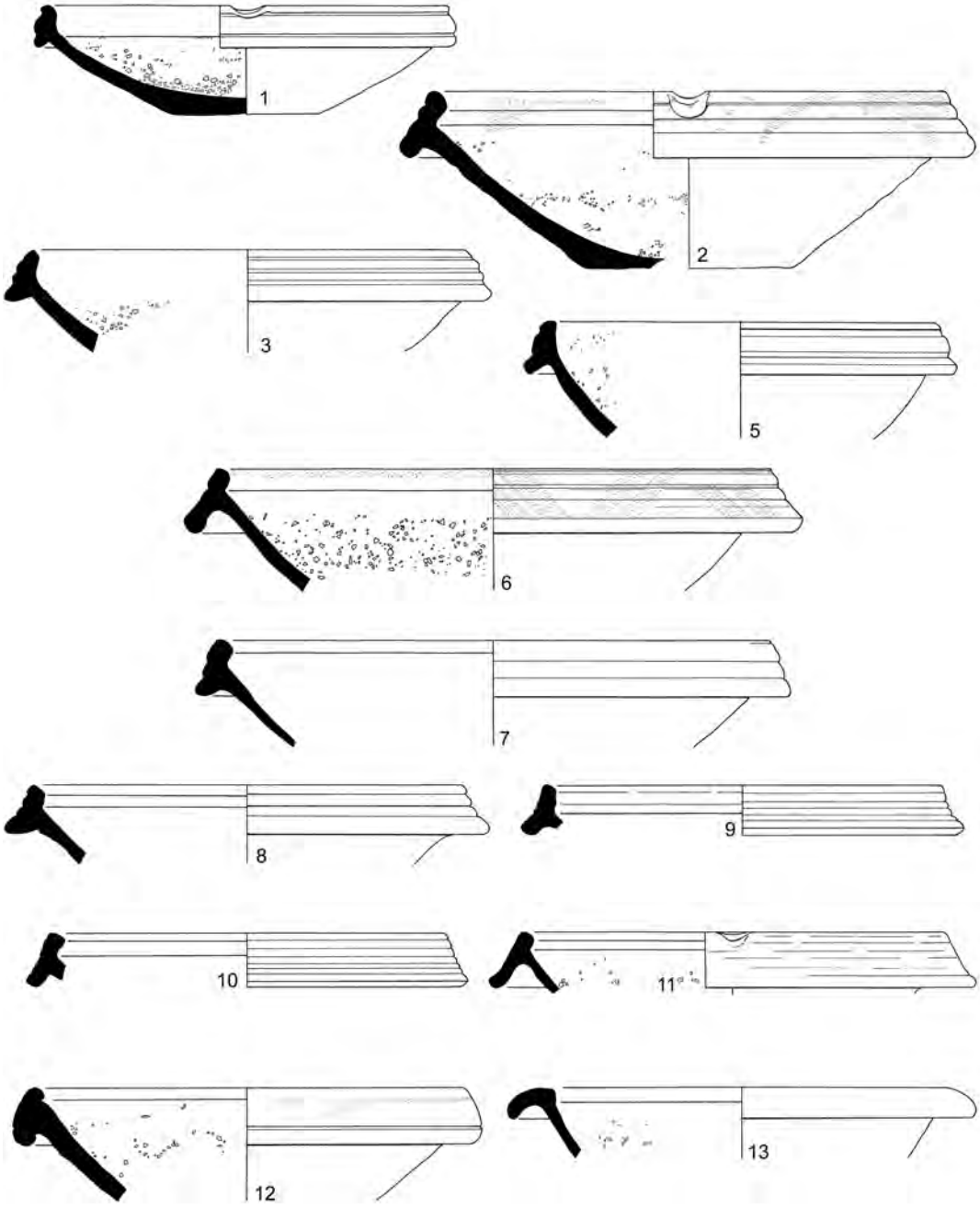

Fig. 9. Mortaria. Scale 1:4.

7. Diam. 32cm (19% rim). Fabric RO 10v. No trituration survives on the badly eroded inner surface, but the softish fabric is so reminiscent of nos 1, 3, 4 and 5, and the upright triple-beaded rim of that of 4, that this can be attributed to the same workshop in the Mancetter-Hartshill potteries. AD 190–230. Fill of boundary ditch 16 (28).
8. Diam. 28cm (18% rim). Fabric RO10? Mancetter-Hartshill potteries. Four-reeded hammerhead, with deep central groove. AD 230–300. The fabric is very similar to RO 10v, but in the absence of trituration there is nothing else to make any obvious link. Fill of boundary ditch 9 (10).
9. Diam. 26cm (13% rim). Fabric RO10. Mancetter-Hartshill potteries. Concave, multi-reeded hammerhead. AD 240–350. Fill of boundary ditch 16 (28).
10. Diam. 27cm (13.5% rim). Fabric RO10 (hard fired). Mancetter-Hartshill potteries. Multi-reeded hammerhead. AD 240–350. Fill of pit 108 (109).
11. Diam. 28cm (15% rim). Fabric RO10/10v. Mancetter-Hartshill potteries. Thin-walled mortarium with hammerhead rim lifted slightly outwards at the distal end, and slight finger-depression spout. The soft fabric is eroded but the multi-reeds were always lightly marked. Very little of the trituration material survives but what there is and the fabric could link this example to the mortaria in fabric RO10v, but this is certainly later. AD 240–350. Fill of ditch 166 (259).
12. Diam. 27cm (20% rim). Fabric RO29. A 'Raetian' mortarium with traces of brown slip surviving on the flange. The most likely source is Wilderspool. Probably AD 140–180. Burnt. Fill of pit 14 and well 7 (15 and 25).
13. Diam. 27cm (11% rim). Fabric RO31. This is a 'Raetian' type E rim with no slip surviving. Form, fabric and type would best fit manufacture at Chester in the first half of the second century, though the form continued to be produced in the Antonine period. Fill of pit 256 (257).
14. Diam. 17cm (10% rim). Fabric RO10. Mancetter-Hartshill potteries. Tiny smooth hammerhead form. AD 250/300–350. Unstratified. Not illustrated.

ROMAN COARSE POTTERY (Figs 10–16)[6]

By Wendy J. Owen and Peter V. Webster

Some 43.9kg (2,236 sherds) of Roman pottery was recovered from the 1994–95 excavations.[7] All the sherds were examined and fabrics were identified macroscopically, according to petrological inclusions, with the aid of a ×8 hand lens, and by comparing sherds with the Clwyd-Powys Archaeological Trust's Fabric Type Series. The coarse ware fabrics have been put into six main groupings, discussed below, but a more detailed quantification, by individual fabrics, is housed in the site archive. Pottery illustrations are presented by fabric group and vessel form and offer a representative selection of the vessel forms found.

The majority of the sherds were recovered from the fills of ditches and gullies, accounting for 74% of the assemblage. Of the remainder, 13% came from pits, postholes, wells and other features, with only 3.5% from soil layers and 9.5% either unstratified or from modern contexts. This distribution reflects the general nature of the archaeology on the site where virtually no stratigraphic sequences survived and the majority of excavated features were boundary or enclosure ditches and gullies. Many of these features contained Roman pottery of a wide range of dates.

Fabric types

The following fabric groups have been distinguished (Table 2 shows a summary of the quantities recovered of each group, as well as the samian ware and mortaria detailed in earlier sections).

Table 2. Quantification of the Roman pottery fabrics (percentages shown in brackets)

Fabric group	sherd count		weight (g)	
Samian	169	(8%)	3,126	(7%)
Mortaria	97	(4%)	5,383	(12.5%)
Red wares	972	(43%)	15,077	(34%)
Black-burnished ware	584	(26.5%)	7,055	(16%)
Grey wares	251	(11.5%)	2,334	(5.3%)
White wares	13	(0.5%)	114	(0.3%)
Colour-coated/Fine wares	35	(1.5%)	162	(0.4%)
Amphorae	115	(5%)	10,717	(24.5%)
Total	2,236		43,968	

Redwares[8]

Severn Valley Ware forms a very large proportion (62%) of all the redwares recovered. The fabrics vary a little in their hardness, sand content and other inclusions, and some sherds are vesicular. This would seem to suggest more than one source of supply, the slightly sandier fabrics perhaps coming from a source on the edge of the Severn Valley production area. Several vessels appear to be 'seconds', partially overfired, partially reduced, with warped, not completely circular rims. At least one (no. 13) has been slightly dented before firing and also shows dunting, appearing as small surface cracks caused when a vessel is cooled too quickly after firing. Jars dominate the vessel forms, many of these having 'double rims' (as Webster 1976, no. 9), though unusual 'triple rims' (as nos 17–19) are particularly common in this assemblage, and there are also some frilled rims. The base of just one tankard was identified. One hemispherical bowl copying samian form 37 is probably from the Severn valley area. Several body sherds from vessels of uncertain forms show evidence of having been mended with lead rivets, perhaps indicating that a supply of these pots was not always readily available. The vast majority of the vessels in the assemblage are dated to the third/fourth century. It is particularly notable that a very limited range of Severn Valley Ware forms (mostly jars as Webster 1976, nos 9 –10) appears to have been supplied in quite considerable quantity during a short period of the site's history. This might perhaps suggest more intense occupation or greater prosperity during that period, or just an easily available supply from one particular source.

A lesser, but still considerable quantity of pottery (26% of redwares) occurs in 'Cheshire Plain fabric' (cf. Webster 1982, 15), notable for the large amount of sandy filler it contains (probably a product of the local drift geology) and characteristic of sites on the Cheshire or Lancashire Plain. Most of the vessels are dated to the first or second century, and forms identified include jars (one lid-seated and one wide-mouthed example), carinated and flanged rim bowls, a bowl imitating samian form 37, small pots resembling unguent pots and triple vases. Wilderspool dull brown colour-coated roughcast beakers, are represented by just 3 sherds.

It was anticipated that in view of its proximity (*c.* 8.5 kilometres) Holt might have supplied a certain amount of the oxidised pottery in the earlier period of occupation of the Plas Coch site. Grimes (1930) reports that pottery at Holt was abundant in the second century and does seem to continue into the third century, but notes that Holt lacks any developed fourth-century cooking pot forms. However, a rapid examination of the Holt pottery at National Museum Wales, Cardiff, failed to confirm any of the oxidised

fabrics from Plas Coch as Holt products, although some of the vessel forms do have their closest parallels at Holt. These include a colander (no. 32) in a crumbly red fabric with frequent small soft creamy white inclusions and a micaceous surface closely resembling Grimes fig. 72, 209. A carinated bowl with grooves on the rim (no. 38), a phallic-shaped patera handle (no. 79) and a frilled tazza-shaped vessel on a pedestal base (no. 27) also bear resemblance to examples at Holt, but these are mainly more unusual items. Sources for the small remainder of the redware fabrics have not been identified. Only two fabrics stand out: a sparkly micaceous red fabric, generally fairly hard, with frequent soft pink-brown inclusions as well as some harder red-brown ones (possibly sandstone); another fairly hard orange-red fabric containing only a moderate amount of quartz and other occasional inclusions such as hard white (limestone?) and brown sandstone.

Flagons are not well represented in the assemblage: the very worn top of one flagon (no. 2) may possibly be late; one handle (no. 3) in the sandy Cheshire Plain fabric is presumed to be from a flagon but no flagon rims in this fabric have been identified with certainty, and cream slip typical of flagons survives on only one body sherd. A further three body sherds with white slip occur in a fabric not dissimilar to the Severn Valley Wares.

Black-burnished ware[9]

Black-burnished ware sherds (BB1) account for 26.5% of the total pottery recovered, and make up a very large proportion (70%) of all the sherds in reduced fabrics recovered. The date range of the vessels is from the mid/late second century into the mid fourth century, though it is notable that there are very many more vessels of mid third- and fourth-century date than there are earlier ones. This is true of cooking pots, dishes and bowls. Vessel forms present include cooking pots, flanged dishes and bowls, plain rim dishes (dog dishes), bead and flange rim bowls, and a jug (represented by the handle). Several cooking pot sherds show evidence of having been mended with lead rivets, perhaps indicating that a supply of these pots was not always readily available.

Greywares[10]

A strikingly small quantity of greyware sherds were recovered from the excavations, and of these a considerable number (around 65%) appear to be deliberate imitations of second-century Black-burnished ware forms, perhaps supplied by a more local source. It is a possibility that these imitations filled a gap in the market when supply of genuine Black-burnished may have been intermittent or difficult to obtain. Their dating does appear to coincide with a period in the second century when Black-burnished ware seems comparatively scarce on the site. Forms include flanged bowls and dishes, a bead and flanged rim bowl, jars, a jug and a handled beaker. Fabrics are mainly hard, fairly rough and sandy (though containing far less quartz than Black-burnished ware), grey-to-orange with darker grey burnished surfaces, but one fabric stands out (RG40), which is wheel-thrown, smoother-textured, mid-grey throughout with burnished exterior surface.

The remainder of the greywares occur mostly in sandier fabrics, some not dissimilar (except in colour) to the red Cheshire Plain fabric, above, and are presumed to be local. Vessel forms included jars, several with everted rim jars, a flanged and carinated bowl and two dishes. Dates range from late first/early second-century to second/third-century. A cordoned jar occurs in a very distinctive soft grey slightly vesicular fabric, containing inclusions of charcoal, presumably organic material charred during firing. Just one Malvernian vessel was recovered, a dish, probably of second-century date in grey-black, rough hard fabric with angular crushed rock inclusions. It has been suggested that vessels such as this may have been used as containers for transporting some commodity such as salt (Webster in Britnell 1989, 89), but the evidence so far is not conclusive.

Whitewares[11]
Whiteware sherds were very scarce and account for only 0.5% of the pottery. No rim sherds were present, but the base of one flagon survives, and it is assumed that most of the small and fragmentary body sherds present also belong to flagons. Some of the fabrics are smooth creamy white, some soft and powdery, but some more sandy fabrics also occur. No sources have been identified.

Shell-tempered wares
Shell-tempered sherds are represented in the 1996 assemblage.[12]

White-slipped flagon fabrics
White-slipped flagon fabrics are represented in the 1996 assemblage.[13]

Colour-coated fine wares
Colour-coated finewares accounted for about 1.5% of the assemblage, which included the following sources:[14] *Rhenish* beakers (one indented), the Trier/Moselle northern version, decorated with dark brown colour coat and rouletting, third-century; *Lezoux* colour coated sherds, probably beakers, including one sherd from a dimpled beaker with rouletted decoration; *Nene Valley* beakers (white fabric) with black, brown and orange-brown colour coats and a rouletted vessel, possibly a 'Castor box'; colour-coated sherds possibly from *Oxford* beakers, also the bottom parts of two beakers of uncertain source (possibly from Nene Valley or Oxford), both in a hard, fine, light orange fabric with no very obvious inclusions apart from occasional charcoal flecks, wheel thrown, with ochre-brown colour coats, one decorated with a horizontal band of honey colour, matching the interior colour coat.

Amphorae
A total of 115 amphorae sherds (10,717g) were recovered which represented 5% of the total assemblage by sherd count and 24.5% by weight.[15] Identified vessels include Dressel 20 South Spanish olive oil containers (76 sherds, represented a minimum of two vessels, no identifiable rims, but two basal spikes present); Gauloise 4 (Pélichet 47) South Gaulish wine amphorae (24 sherds); 5 sherds most likely from Dressel 2–4 Italian wine amphora, and 1 sherd probably from a fish sauce amphora, with long neck and long spike.

Discussion of the ceramic assemblage
A functional analysis of the coarse pottery assemblage by Jeremy Evans is included in the archive report on the 1996 assemblage (Evans 1998a, 79–80) which has a bearing upon the interpretation of the site as whole. This analysis suggests that the overall level of jars at 42.1% (constricted-necked jars are regarded as more likely liquid containers along with flagons), is fairly low and that of dishes and bowls quite high at 34.6%. Drinking vessels are modestly represented, although there is a surprising lack of tankards, owing to their poor representation amongst the Severn Valley wares. Flagons are reasonably represented, and constricted-necked jars well so, resulting in an unusually high level of possible liquid storage and serving vessels. These levels were considered to be much higher than those found in northern England (Evans 1993) and higher than those on most sites in the Midlands (Evans 1996). Evans suggested that the quantity of amphora sherds alone from this site suggested that it was more than simply a basic rural site (cf. Evans 1998a).

The chronological trend in the function figures at Plas Coch is interesting. Jar levels start off in the mid second century at 37.5%, fall to 32.1% in the late second to mid third centuries then rise sharply to 52.6% in the late third to mid fourth centuries. Dishes and bowls showing high levels of 40.3% in the mid

second century, with 42.7% in the late second to mid third centuries, and then falling to 25.9% in the late third to mid fourth centuries. The rim equivalent figures are slightly different with no fall in jar levels in the late second to mid third centuries, but show the same basic trend of a marked rise in jars and decline in tablewares in the later phase of the site. The standard pattern through time is of a fall in jar levels from fairly high early levels with time and a rise in tablewares (Evans 1993), but many northern towns show a different pattern of low initial tableware levels, which rise markedly in the fourth century. Plas Coch seems to be following the northern pattern. This is one shared by many northern towns and forts, a good example of which can be found at Segontium (Webster in Casey *et al.* 1993, 254). This author interprets this pattern as one indicating urban communities with strong immigrant and military connections where 'Roman' use of ceramics was already well known in the first and second centuries at their foundation (Evans 1993). The rise of jar levels in the fourth century is a pattern seen across the north of England and seems to indicate a growing trend of 'de-Romanisation' which affects all non-rural sites.

Some 21 sherds from the site show evidence of riveting, of which 16 sherds are of BB1, and 5 of samian ware. All the rivets holes are of the circular drilled type and all probably contained lead rivets, several of which remained *in situ*. None of the X-type rivets were used, although this is usually the commoner type for repairing samian, and there is no evidence of the use of iron rivets, found on several north Welsh sites. The riveting of coarsewares, as opposed to samian and mortaria, is fairly unusual on sites in lowland England although common on sites in north Wales where access to ceramics seems to have been limited.

1. Gauloise 4 amphora. Fabric more sandy than is normal. Abrasive cream-coloured fabric. First/third-century. Fill of boundary ditch 3 (4).
2. Flagon with small flange on neck in worn smooth buff-orange fabric with grey-brown core. Fill of boundary ditch 3 (4).
3. Handle in slightly sandy orange fabric, possibly from the Cheshire Plain. The form imitates a metal vessel with a thumb-stop. Imitation metal vessels are present at Holt, cf. Grimes 1930, no. 121. Fill of boundary ditch 16 (28).
4. Small jar in sandy orange fabric, probably from the Cheshire Plain. Fill of boundary ditch 16 (28).
5. Small jar in Cheshire Plain orange sandy fabric. Fill of modern ditch 51 (52).
6. Small jar in pale orange sandy Cheshire Plain fabric. Slight traces of thin white slip externally. The vessel has been conjoined to another, now missing. The most likely restoration is as an element of a triple vase of Kaye's type 1 (Kaye 1914), as in an example from Wilderspool (Hartley and Webster 1973, no. 70). Possibly from Wilderspool, late first/mid second-century. Fill of gully 139 (140).
7. Small jar resembling an unguent pot. Fabric is pale orange-brown, smooth, quite hard, but very flaky. Fill of boundary ditch 16 (28).
8. Severn Valley jar with big roll rim in smooth pale orange fabric. Fill of pit 256 (257).
9. Severn Valley jar decorated with cordon below neck and groove on shoulder. Smooth orange fabric with grey core. Cf. Webster 1977, no. 20, Antonine to third-century. Fill of boundary ditch 79 (80).
10. Severn Valley ware jar, burnished on the rim. Smooth orange fabric with grey core, slightly micaceous. Cf. Webster 1976, no. 8, third-century. Fill of boundary ditch 9 (10 and 62).
11. Severn Valley jar in smooth orange fabric with double rim decorated with slashes. Cf. Webster 1976, no. 13, third/fourth-century. Fill of ditch 166 (259).
12. Severn Valley Ware jar in smooth pale orange fabric with double rim, the surface worn and powdery. Similar to Webster 1976, no. 10, third/fourth-century. Fill of ditch 166 (259).
13. Severn Valley Ware jar with double rim. The vessel is warped and dented, probably a second. Decorated with wide cordon below neck. Burnished on the exterior surface and inside the mouth.

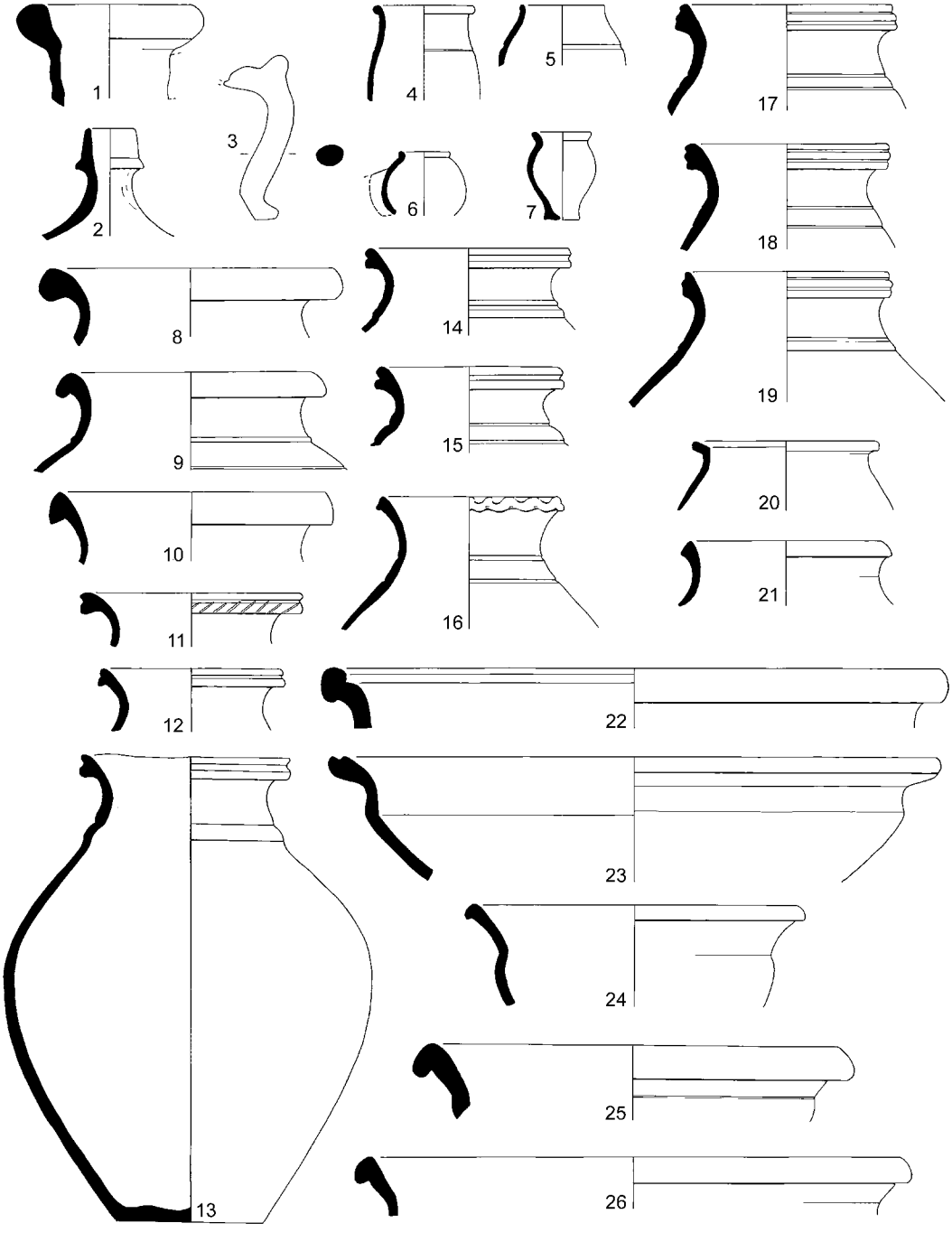

Fig. 10. Roman coarse pottery, nos 1–26. Scale 1:4.

Fairly hard, smooth orange fabric. Form similar to Atkinson 1942, fig. 46 C4 (late third-century) and Webster 1976, no. 9, late third/fourth-century. Fill of boundary ditch 3 (4).

14. Severn Valley Ware jar with double rim and double cordon decoration below neck. Worn soft orange fabric. Similar to Webster 1976, no. 9, third/fourth-century. Fill of boundary ditch 95 (96).
15. Jar with double rim in reduced Severn Valley Ware. Shoulder decorated with grooves and wide cordon. Burnished. The fabric is hard-fired red-brown with grey surfaces. Fill of boundary ditch 95 (96).
16. Jar with frilled rim, decorated with two grooves below neck in smooth orange fabric with paler surface. A late Severn Valley form, cf. Webster 1976, no. 13, third/fourth-century. Fill of boundary ditch 3 (4).
17. Severn Valley Ware jar with triple rim, decorated with grooves and cordon. Smooth pale orange fabric, third/fourth-century. Fill of boundary ditch 3 (4).
18. Severn Valley Ware jar with triple rim, decorated with grooves and a wide cordon. The fabric is over-fired hard smooth orange-red, with partially grey surfaces, third/fourth-century. Fill of boundary ditch 95 (96).
19. Jar with triple rim. The rim is not circular. Decorated with a vague cordon below neck. Hard-fired smooth orange fabric, the exterior surface is partially grey. Fill of boundary ditch 3 (4).
20. Jar in light orange sandy Cheshire Plain fabric, worn and powdery surface. Fill of pit 306 (260).
21. Jar in red-brown slightly sandy fabric, source unknown. Fill of pit 256 (257).
22. Wide mouthed jar in Cheshire Plain orange sandy fabric. Cf. Hinchcliffe *et al*. 1992, no. 639, probably second century. Fill of well 7 (24).
23. Wide mouthed jar, originally burnished, in Cheshire Plain light orange sandy fabric. Fill of pit 137 (138).
24. Jar in pinkish brown fabric with grey core, smooth and micaceous. Much of the surface has flaked off, but burnishing evident on the rim. Although probably from a different source, the form is similar to Webster 1976, no. 22, second/third-century. Unstratified and fill of boundary ditch 9 (1 and 10).
25. Severn Valley wide mouthed jar in smooth orange fabric with grey core. A chunkier version of Webster 1976, no. 27, possibly late third/fourth-century. Fill of well 7 (24).
26. Severn Valley wide mouthed jar in smooth orange fabric. Cf. Webster 1976, no. 27, late third/fourth-century. Fill of enclosure ditch 106 (107).
27. Bowl/tazza, the top incomplete, in Cheshire Plain orange sandy fabric. Similarly frilled types of vessel at Holt. Fills of well 7 (26 and 27).
28. Hemispherical bowl in slightly sandy orange fabric, probably from the Cheshire Plain. Fill of boundary ditch 16 (28).
29. Bowl in slightly vesicular pale orange fabric with grey core, probably from the Severn Valley. Fill of gully 139 (140).
30. Bowl possibly from the Severn Valley decorated with double grooves. Smooth light orange fabric. Fill of boundary ditch 79 (273).
31. Hemispherical bowl copying the samian form 37 or 30, probably from the Severn Valley area. Pale orange smooth fabric. Unstratified, fills of well 7 and boundary ditches 16 and 43 (1, 17, 25 and 44).
32. Colander with burnished exterior surface, in smooth, hard, pink-brown fabric containing very noticeable and frequent soft creamy inclusions. Similar to Grimes 1930, fig. 72, no. 209. Fill of boundary ditch 9 (68).
33 Flanged bowl in micaceous pink-brown fabric with grey core. Fill of well 7 (26).
34. Mortar-like bowl with worn surface, in smooth orange fabric with grey core, first/second-century. Fill of pit 41 (76).

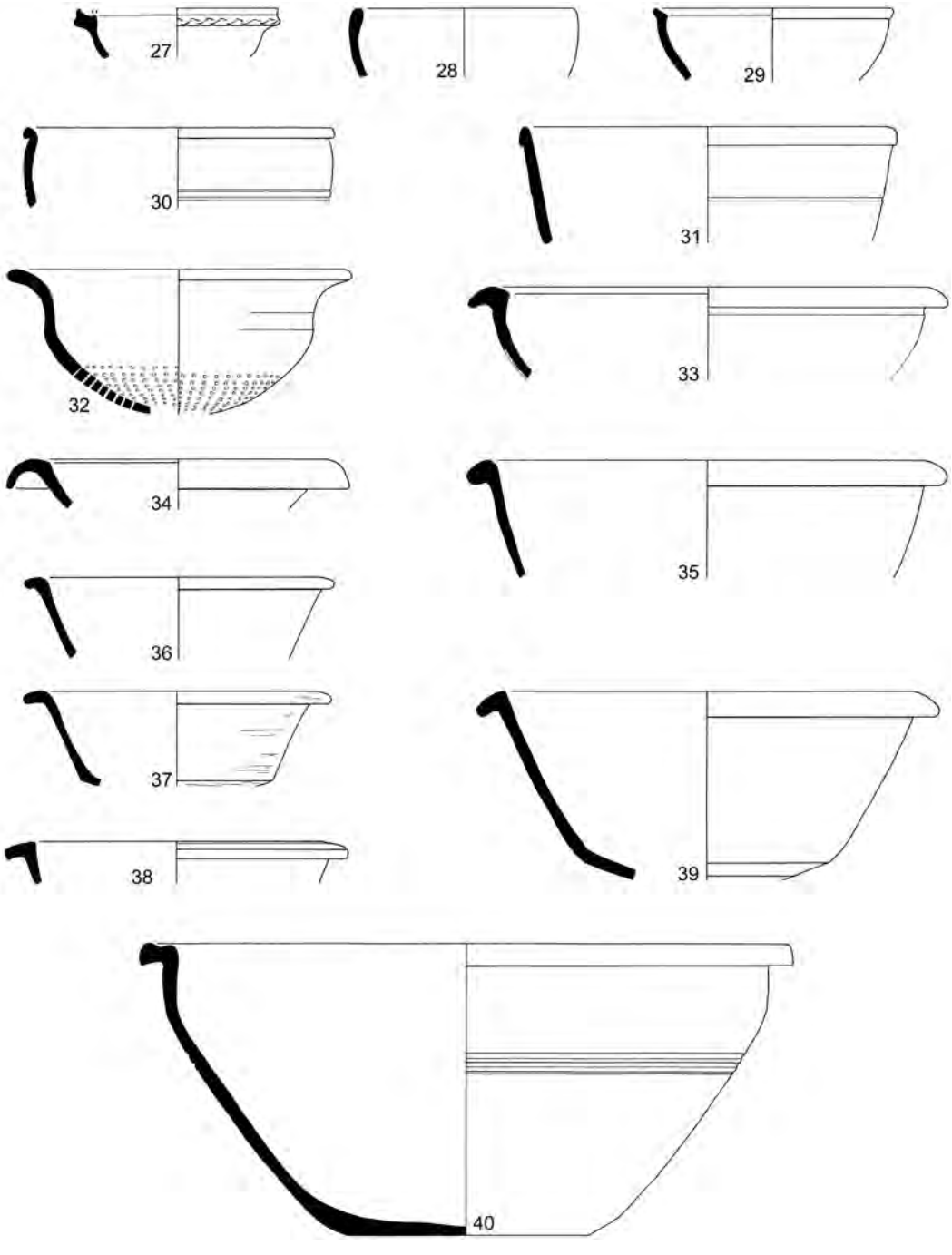

Fig. 11. Roman coarse pottery, nos 27–40. Scale 1:4.

35. Flanged and carinated bowl in orange sandy Cheshire Plain fabric, first/second-century. Fill of boundary ditch 16 (28).
36. Bowl in sandy buff-orange fabric from Cheshire Plain, possibly imitating a Black-burnished ware form of the first or second century. Fill of gully 139 (140).
37. Flanged and carinated bowl with burnishing on both interior and exterior surfaces. Grey-brown sandy fabric. Possibly Trajanic–Hadrianic. Unstratified (123).
38. Carinated bowl with grooves on the rim. Worn orange sandy fabric. Cf. Grimes 1930, 217. Soil layer 163, Area 2.
39. Flanged bowl. Very sandy orange Cheshire Plain fabric. Fill of boundary ditch 16 (28).
40. Bowl decorated with double grooves. The rim looks as if it was intended for a lid. Very smooth pinkish-orange fabric, the surface quite worn. Possibly an edge-of-Severn-Valley hybrid of third/fourth century, not dissimilar to some Wroxeter vessels; also Grimes 1930, fig. 65, no. 88. Fill of boundary ditch 3 (4).
41. Jar, Black-burnished ware. Fill of ditch 82 (78).
42. Jar, Black-burnished ware. Neck decorated with angled slashes. Cf. Gillam 1976, no. 2, mid second-century. Fill of boundary ditch 16 (28).
43. Jar, Black-burnished ware. Cf. Gillam 1976, nos 5–7, late second/mid third-century. Fill of boundary ditch 3 (4).
44. Jar, Black-burnished ware. Incised cross on underside of base. Cf. Gillam 1976, no. 7, early/mid third-century. Fill of boundary ditch 3 (4).
45. Jar, Black-burnished ware. Neck decorated with angled slashes. Cf. Gillam 1976, no. 7. Fill of boundary ditch 3 (4).
46. Jar, Black-burnished ware. Cf. Gillam 1976, nos 11–12, late third/early fourth-century. Fill of boundary ditch 3 (4).
47. Jar, Black-burnished ware. Cf. Gillam 1976, no. 10, late third-century. Fill of enclosure ditch 106 (107).
48. Smaller jar, Black-burnished ware. Cf. Gillam 1976, no. 12, early fourth-century. Fill of boundary ditch 3 (4).
49. Jar, Black-burnished ware. Cf. Manning 1993 fig. 126, 21.5, early/mid fourth-century. Fills of pond 280 (253) and ditch 166 (259).
50. Jar, Black-burnished ware. Rivet hole on shoulder. Cf. Gillam 1976, nos 13–14, early/mid fourth-century. Fill of recut of ditch 166 (167).
51. Jar, Black-burnished ware. Cf. Gillam 1976, no. 13, early/mid fourth century. Fill of boundary ditch 16 (17).
52. Bowl, Black-burnished ware with intersecting arc decoration. Cf. Gillam 1976, nos 40–41, mid/late second-century. Fill of boundary ditch 16 (28).
53. Bowl, Black-burnished ware with very faint intersecting arc decoration. Cf. Gillam 1976, nos 35–41, mid/late second-century. Fill of well 7 (26).
54. Bead and flange bowl, Black-burnished ware with intersecting arc decoration. Cf. Gillam 1976, no. 49, early/mid fourth-century. Fill of ditch 166 (168).
55. Bead and flange bowl, Black-burnished ware with intersecting arc decoration. Cf. Gillam 1976, nos 48–49, early/mid fourth-century. Fill of pit 254 (257).
56. Plain rim dish with very faint decoration, probably intersecting arcs, Black-burnished ware. Cf. Gillam 1976, no. 74, possibly third century. Fill of well 7 (26).
57. Plain rim dish with intersecting arc decoration, Black-burnished ware. Fill of well 110 (111).
58. Very shallow plain rim dish with intersecting arc decoration, Black-burnished ware. Cf. Gillam 1976, no. 80, mid/late third-century. Fill of boundary ditch 3 (4).

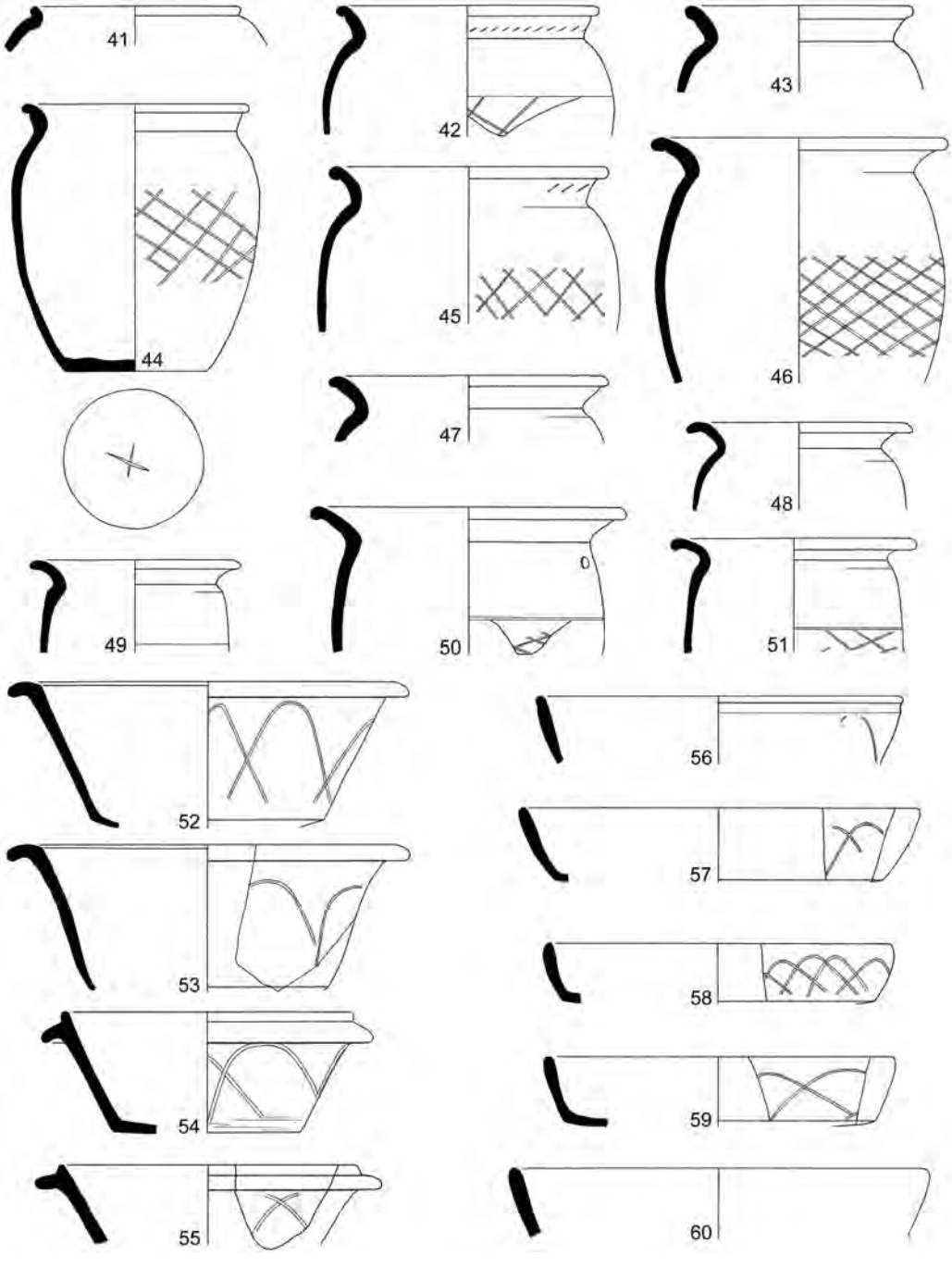

Fig. 12. Roman coarse pottery, nos 41–60. Scale 1:4.

59. Plain rim dish with intersecting arc decoration, Black-burnished ware. Cf. Gillam 1976, no. 80, mid/late third-century. Fill of boundary ditch 3 (4).
60. Plain rim dish, Black-burnished ware. Possibly of the same date as the fourth-century cooking pot from this context. Fill of recut of ditch 166 (167).
61. Plain rim dish with rather pointed intersecting arc decoration, and also decoration on the underside of the base, Black-burnished ware. Cf. Gillam 1976, no. 81, late third-century although decoration is closer to no. 83, mid fourth-century. Fill of boundary ditch 16 (28).
62. Plain rim dish with intersecting arc decoration, and also decoration on the underside of the base, Black-burnished ware. Cf. Gillam 1976, no. 79, third/fourth-century. Fill of boundary ditch 3 (4).
63. Handled beaker imitating Black-burnished ware. Surface worn but possibly originally burnished. Hard, dark grey sandy fabric. Second-century. Fill of gully 139 (140).
64. Handled beaker with burnished surfaces, probably imitating Black-burnished ware form. Fabric is slightly sandy pink-brown, with dark grey surfaces. Similar in form to Gillam 1976, no. 75, second-century. Fill of boundary ditch 3 (4).
65. Jar with burnishing and very faint, apparently very wide, lattice decoration imitating Black-burnished ware. Grey, very sandy abrasive fabric, possibly wheel-thrown. Second/third-century. Fill of well 7 (99).
66. Jar with burnishing and panel of obtuse angle lattice decoration imitating Black-burnished ware. Fabric is pink-brown, slightly sandy, with burnished black surfaces. Similar to Gillam 1976, no. 9, mid/late third-century. Fill of boundary ditch 95 (96).
67. Jar, burnished except for panel of wide lattice decoration. Wheel thrown. Slightly sandy mid-grey fabric. Similar to Black-burnished ware jars of mid/late third-century. Fills of boundary ditch 16 and modern ditch 51 (28, 30 and 52).
68. Jar in light grey sandy fabric, with faint traces of burnishing on the surface. Possibly influenced by Black-burnished ware. Third-century. Fill of boundary ditch 9 (67).
69. Flanged bowl, wheel thrown, imitating a second-century Black-burnished ware form. Black, burnished surfaces, but sandy brown fabric with grey core. Second half of second century. Fill of enclosure ditch 153 (154).
70. Flanged bowl, with burnished black surfaces imitating Black-burnished ware. Fabric is pink-brown, slightly sandy. Third-century. Fill of boundary ditch 3 (4).
71. Flanged dish with wedge-shaped rim and lattice decoration Black-burnished ware imitation. Orange brown sandy fabric with grey surfaces. Possibly second-century. Fill of boundary ditch 79 (80).
72. Bead and flange rim dish with intersecting arc decoration imitating Black-burnished ware. Underside of base decorated with swirly loops. Hard grey sandy fabric with brown surfaces. Late third/mid fourth-century. Fill of recut of ditch 166 (258).
73. Jar in sandy pale grey fabric. Second/third-century. Fill of modern ditch 51 (52).
74. Jar decorated with cordon below the neck. Fabric is pale grey, soft and vesicular, with some charred material as inclusions. Soil layer 163, Area 2.
75. Everted rim jar in sandy grey fabric with brown core. Late first/early second-century. Fill of foundation trench 297 for building in Area 3 (89).
76. Flattened everted rim jar in sandy grey fabric. First/second-century. Unstratified (123).
77. Malvern dish with external burnishing in very hard dark grey-brown granular fabric. Cf. Peacock 1967, fig. 1, no. 16. Unstratified (123).
78. Shallow bead rim dish imitating samian form 18/31. Worn, grey sandy fabric, possibly originally burnished. Late first/mid second-century. Fill of well 7 (24 and 25).

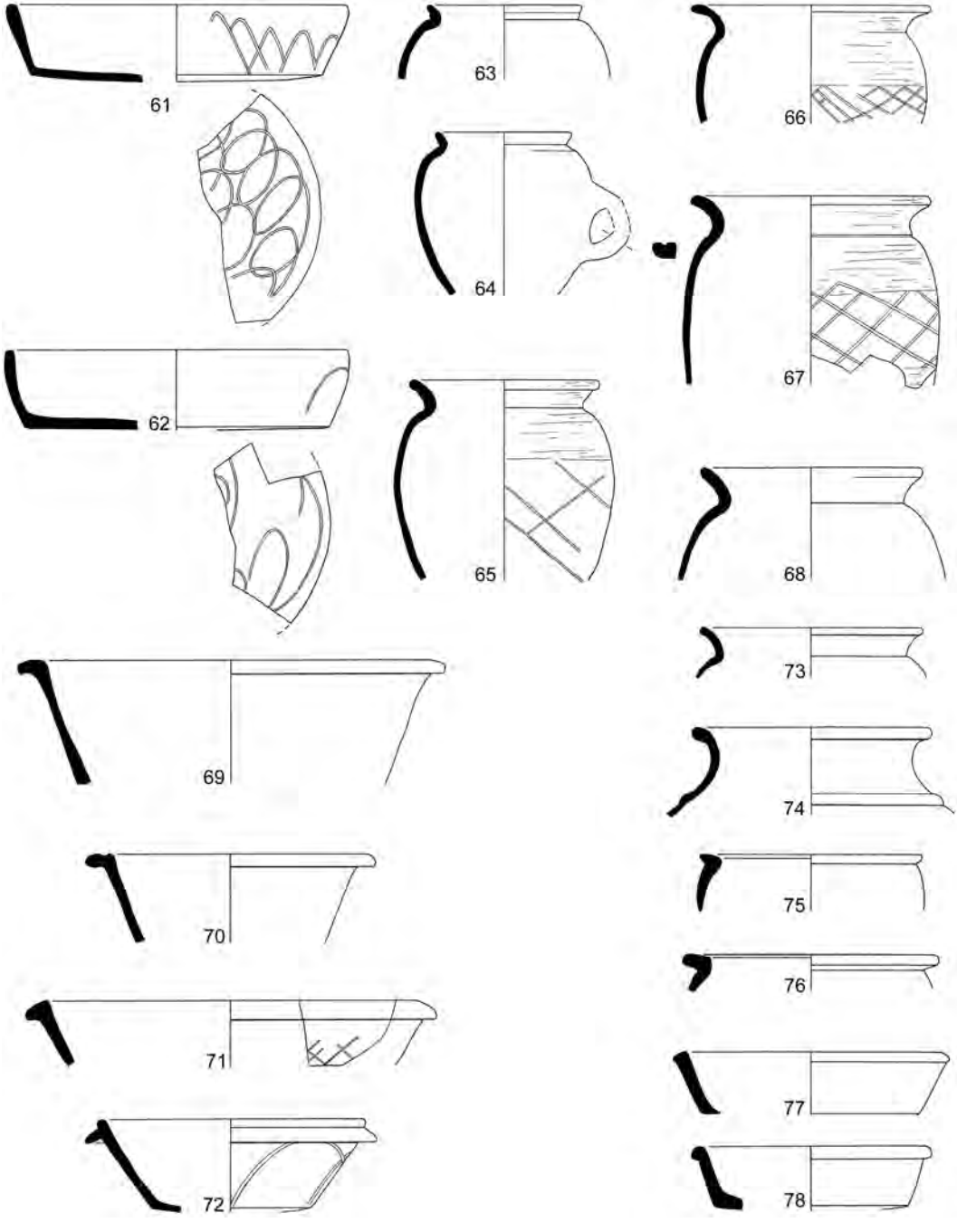

Fig. 13. Roman coarse pottery, nos 61– 78. Scale 1:4.

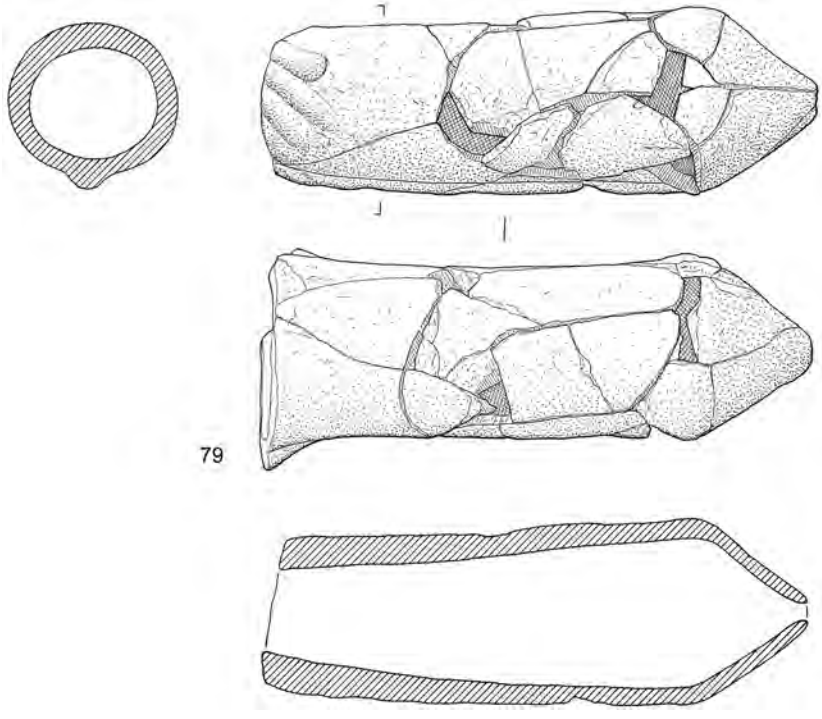

Fig. 14. Phallic patera handle. Scale 1:2.

79. Phallic handle from a patera in smooth light orange fabric with a grey core of the form which in bronze normally has a ram's head (Catherine Johns, British Museum, pers. comm.). Examples of pottery ram's head handles were found at Holt (Grimes 1930, 174 and fig. 60, no. 4), although these were cast in two sections whereas this example has been thrown and modelled in one piece (Fig. 14). Fill of boundary ditch 3 (4).
80. Pottery mould/stamp impression in red fabric with few inclusions. Possibly a dolphin, although no close parallels have been found (Fig. 15). Fill of well 7 (97).
81. The rather worn head and shoulders of a female figure in a smooth orange fabric, perhaps originally ornamenting a jug as at Holt (Grimes 1930, fig. 57, nos 1–3). The figure appears to have been formed by pressing the clay into a mould (Fig. 16). Fill of boundary ditch 95 (96).

GLASS

By Denise Allen

Six fragments of Roman vessel glass were recovered from the 1994–95 excavations, together with one melon bead and a further four fragments of post-medieval or modern date. Three, or possibly four, of the Roman fragments are from common first- to second-century bottles, while two joining rim fragments from a colourless beaker or jar show that other vessel forms were present, but they cannot be identified with certainty. None of the fragments are illustrated.

Fig. 15. Pottery mould or stamp, possibly representing a dolphin. Scale 1:1.

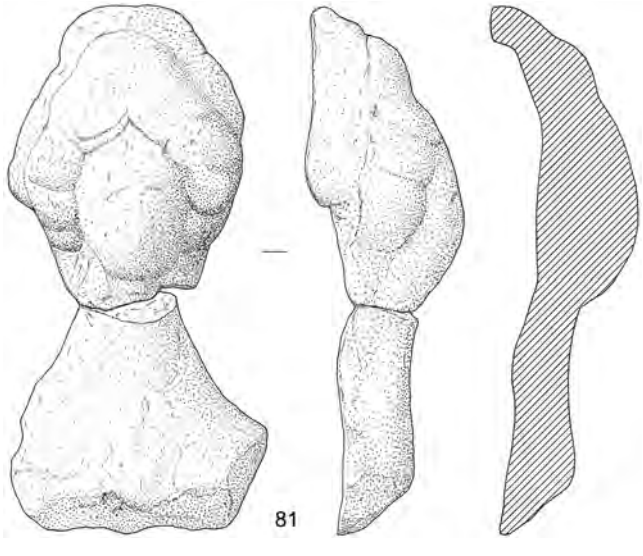

Fig. 16. Head and shoulders of a female figure, possibly originally decorating a jug. Scale 1:1.

1. Prismatic bottle fragment in blue-green glass with large impurity. First/second-century. Fill of well 7 (24).
2. Bottle handle fragment in blue-green glass. First/second-century. Fill of ditch 9 (10).
3. Prismatic bottle base fragment in blue-green glass. First/second-century. Fill of corn dryer stokehole (100).
4. Indeterminate fragment of blue-green bottle glass. Soil layer 78, Area 2.
5. Neck fragment of a bottle, jug or flask in blue-green glass. Possibly first/second-century. Topsoil (277), Area 3.
6. Two joining rim fragments of a beaker or jar in colourless glass. Rim outflared and folded downwards and inwards, diam. *c.* 6cm. First/third-century. Fill of ditch 9 (10).
7. Melon bead fragment in turquoise glass paste. First/early second-century. Topsoil (277), Area 3.

BRONZEWORK (Fig. 17)

By Janet Webster

1. A small plain brooch in the Polden Hill with Dolphin Profile series. The type is defined and discussed in the Usk report (Manning, Price and Webster 1995, 74 in connection with nos 34–6). The Wrexham brooch has the characteristic humped head and straight profile of the type. Its surface is badly abraded but the semi-circular mouldings to either side of the head of the bow are evident and the bow is otherwise plain. It tapers, but the foot and part of the catchplate are lost. The short, almost semi-cylindrical side-wings had pierced terminals for the axis bar of the spring which was also secured by means of a rearward hook at the head to hold the external chord. From the rear the head of the bow, between the side-wings, is deeply hollowed.

   The type as a whole has a widespread distribution in southern and midland Britain with characteristic regional variants, of which this is one, evidenced in Wales and the west Midlands. The brooch is closely similar to an example from Caerwent, now in Newport Museum (Acc. No. D2.164). A brooch from the extra-mural settlement in Caerleon may also be cited (Boon n.d., 24). Two further examples from the same location are very similar but perhaps slightly more slender at the head (Boon n.d. nos 23, 25) as is an example from Whitton (Jarrett and Wrathmell 1981, 169, no. 11, fig. 69).

   The type is not closely dated, occurring in Flavian deposits at Caerleon (Boon n.d., no. 25) and continuing in use in the early second century. Find 1098, fill of ditch 85 (86).
2. Trumpet brooch in poor condition, damaged and badly abraded, but originally a fine example with enamelled ornament. The brooch had a spring mechanism for the pin: part of the pierced lug to support the axis bar of the spring and secure the internal chord remains at the rear of the head. The bow is not of a continuous curve in profile but is heavily arched at the head and thereafter straight. The upper bow carries evidence of enamel ornament but the design scheme is not wholly recoverable. There appear to be two large circular motifs, perhaps with subsidiary scrolls, defined by bronze walls and presumably inlaid with enamel of a colour not now discernible, each set in a field of dark blue enamel to either side of the median line of the upper bow. Further decorative detail is lost.

   The waist mouldings are carried round the back of the bow where they are less pronounced. The button appears to have been clasped between acanthus mouldings although these are largely worn away. The leg had a pronounced central rib, perhaps originally flanked by raised triangles of bronze to give the effect of a row of lozenges down the centre of the leg, with hollowing, perhaps for enamel insets, to either side. The brooch appears to have had a large foot knob, recurving to the front, but it is lost and the mouldings which link it to the lower leg are badly abraded. There is a narrow, elongated catchplate with the return lost.

Trumpet brooches are thought to have evolved by the middle of the first century AD (Boon and Savory 1975, 50–7; Hattatt 1985, 105; Manning, Price and Webster 1995, 85) and continued in use until late in the second century.

The enamel decoration of this brooch, in so far as it can be discerned, seems to be derived from the oxhead motif as has been suggested for a series of non-inlaid relief scroll ornament trumpet brooches (Wheeler and Wheeler 1932, 76–7, no. 17, fig. 12) and for the opposed-crescent enamelled trumpet series (Hattatt 1987,125). If anything, the decoration of the Wrexham brooch seems closer to the non-inlaid relief scroll series (cf. an example from Whitton: Jarrett and Wrathmell 1981, 174, no. 21, fig. 70) than to the opposed crescent enamelled types (cf. an example from Usk: Manning, Price and Webster 1995, 86–7, no. 56, fig. 26). Unstratified, Area 2.

3. The brooch would seem to be a curious variant within the distinctive series variously known as Hull's Wroxeter Type, his Type 151 (Hull 1961, 46–7, fig. 3b), and Snape's Severn Type (Snape 1987, AA.5 XV, 309–12; 1993, 14, 2.4), with further discussion by Hattatt (1985, 111, no. 422, fig. 46; 1987, 145–7; 1989, 96–7).

The type is characterised by the U-shaped plate at the head, often equipped with a cast head-loop, by the lengthwise panel of enamelled ornament running down the upper bow and by the ornament at the waist, which may take various forms. In profile the brooches either have a smooth, pronounced curve throughout, or are P-shaped in profile with a marked recurve to the lower leg. The type is generally sprung with the spring held between twin lugs to the rear of the head or supported on a single central rearward lug, but hinged examples with the pivot bar housed in a cylindrical moulding at the rear of the head, also occur, particularly among Snape's northern sub-group. Fine examples of the type may be cited from Caerleon (Evans and Metcalf 1992, 109–10, no. 8) and Caerwent (Snape 1987, fig. 1c; Webster, Newport Museum brooch catalogue, in prep.).

The Wrexham brooch has a narrow U-shaped plate at the head, no wider than the upper bow. A transverse groove embellished with a wavy line rib crosses the top of the U-shaped plate close to its upper edge. Beyond, a narrower extension carries a similar band of ornament and the stumps of the cast head-loop are visible above. To the sides of the U-shaped plate, twin pierced lugs project to support the iron axis bar of the tiny bronze spring with internal chord which is housed in a recess in the rear of the plate. In profile a pair of incised lines defines two narrow margins on the side edges of the U-shaped plate where it meets the bow.

The upper bow has a central rib running from the head to the pronounced knob at the waist. The rib is defined by incised lines and is flanked on each side by a narrow, similarly defined margin. To the outer side of each of these margins is a series of single deeply-indented scrolls which decorate the sides of the bow, running towards the foot. There is some trace of a median rib down the lower part of the leg. The indented scrolls have traces of a black inlay, the identity of which has not been established.

There is an associated fragment of bronze comprising a knob, similar to but smaller than that at the waist of the brooch, with attached mouldings. This fragment may represent the foot knob of the brooch, but if so it is not now possible to see how it joined the damaged leg. It is possible that it may be a fragment of the waist of another brooch, perhaps making an almost matching pair, especially given the presence, too, of a fragmentary piece of catchplate which does not appear to have belonged to the main brooch.

There can be little doubt from the overall form of the piece that the brooch belongs to the Wroxeter/Severn series. The P-shaped profile with a recurved foot is an established variation within the series cf. Snape's Vindolanda type (Snape 1987, fig. 1b) and Hattatt's example from Eye, Suffolk (Hattatt 1989, 96–7, no. 1538, fig. 47). The U-shaped plate at the head and its transverse ornament

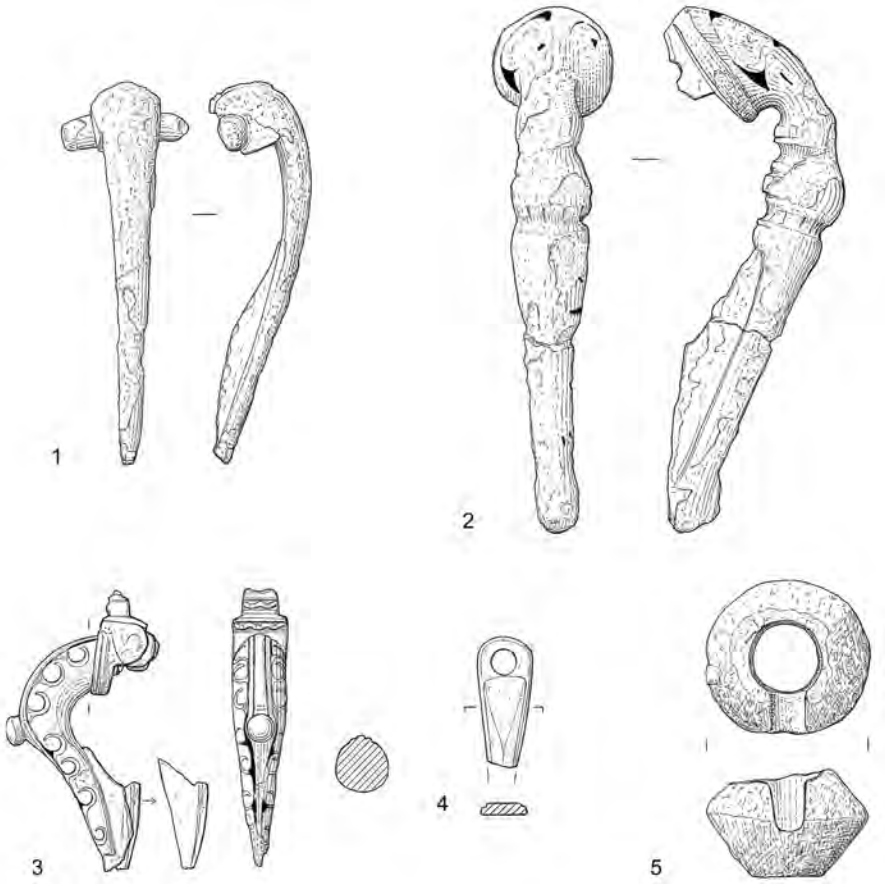

Fig. 17. Objects of bronze (nos 1–4) and lead (no. 5). Scale 1:1.

are typical, as is the spring arrangement, and several brooches within the series feature the same sort of knob ornament at the waist cf. Wilderspool (Thompson 1965, 82–3, no. 3, fig. 20) and Corbridge (Snape 1993, 35, no. 103, fig. 5).

The Wrexham brooch diverges from the main series in that it lacks the flat faced panel to the upper bow normally decorated with lengthwise cells of enamel inlay and has instead scroll ornament which runs down each side of the bow. Scroll ornament, albeit in a different form, also replaces the lengthwise panel of ornament on the upper panel of a large, silvered, somewhat atypical Wroxeter/Severn brooch from the Antonine Wall (Snape 1987, 311; Robertson 1970, 218, fig. 10 no. 7 and p. 233) although even here the front face of the upper bow is a flat panel, unlike the Wrexham brooch, the upper bow of which is of peaked ovoid cross-section.

When Hull defined the type in his discussion of the Hucclecote brooch, he suggested, on the basis of the evidence then available to him, manufacture in the Wroxeter area (Hull 1961, 46–7, fig. 3b, where Hull refers *inter alia* to 4 examples from Wroxeter). More recently, Snape has identified a stylistically cohesive sub-group as the product of a small northern workshop, perhaps based on Corbridge, producing mainly for the northern market (Snape 1987; 1993, 35, no. 10.3). Recent finds

from Wales and the Marches would seem to confirm the manufacture of the type in the Severn Valley area although in this corridor a wider range of stylistic variation occurs and a number of examples could be confused with, or could indeed be the products of Snape's northern factory. A brooch from Llys Faen, Clwyd, for example (Manley 1984, 105–6), is apparently identical to Snape's Vindolanda example and that from Wilderspool is identified by Snape as belonging to her northern group.

There seems little doubt that the Wroxeter type was the product of small-scale manufacture at a number of different centres all working to the same criteria and on the whole producing a very similar product. The Wrexham brooch is therefore even more interesting for its singularly atypical treatment. A late first-century AD date of manufacture was suggested for the Caerleon Wroxeter brooch, with the type continuing into the second century. Find 2017, fill of boundary ditch 79 (273).

4. Small, flat, tapered fragment of bronze, pierced at the end for suspension, with a narrow margin down each side, defined by an incised groove, the panel between being lightly faceted. Perhaps a toilet implement. Find 1025, fill of pit 137 (138).

   Fragments of a brooch spring were also recovered, comprising part of the spring coil with the upper part of the pin and part of the chord. There are traces of iron within the spring coils, perhaps the remains of an axis bar to hold the pin mechanism in place either through securing by means of a central lug at the back of the brooch or on pierced disc terminals to side-wings or arms. Such spring arrangements were current from the mid first century into the second century, but a later date cannot be ruled out as they occur for example on Knee and P-shaped types too. Find 1013, fill of boundary ditch 79 (81). Not illustrated.

LEAD (Fig. 17, no. 5)

A single unstratified lead weight or possible spindlewhorl was recovered during the 1994–95 excavations.

IRONWORK (Fig. 18)
By William H. Manning

1. Adze-hammer, a common carpenter's tool. Rounded eye with short collar below. The hammerhead is rounded, while the adze-blade is turned through a sharp angle with straight sides which splay out to give a wide edge. Overall length 180mm. Similar to Manning's type B16 (Manning 1985, 18 and pl. 9). Find 1017, fill of pit 56 (103).
2. Possible hoop or reinforcement ring. The triangular cross-section might suggest that it came from a hub lining (cf. Manning 1985, 72, pl. 30 H35ff), but its diameter would be unusually large for such a fitting. One end intact, originally *c.* 130mm diam., up to 21mm wide, with tapering cross-section, max. thickness 4mm. Find 1048, fill of gully 112 (113).
3. Probably part of a knife, slightly tapering. Four fragments, three adjoining. Width max. 14mm. Unstratified (122).
4. Two fragment of a nailed binding. Find 1016, fill of pit 56 (103).
5. End of a binding or hinge with a nail hole. Length 30mm, width 26mm, thickness 2mm. Fill of ditch 166 (259).
6. Probably the flattened head of a double-spiked loop. Find 1076, fill of enclosure ditch 153 (154).
7. Flat sheet with well formed curved edge. Find 1012, fill of boundary ditch 16 (28).

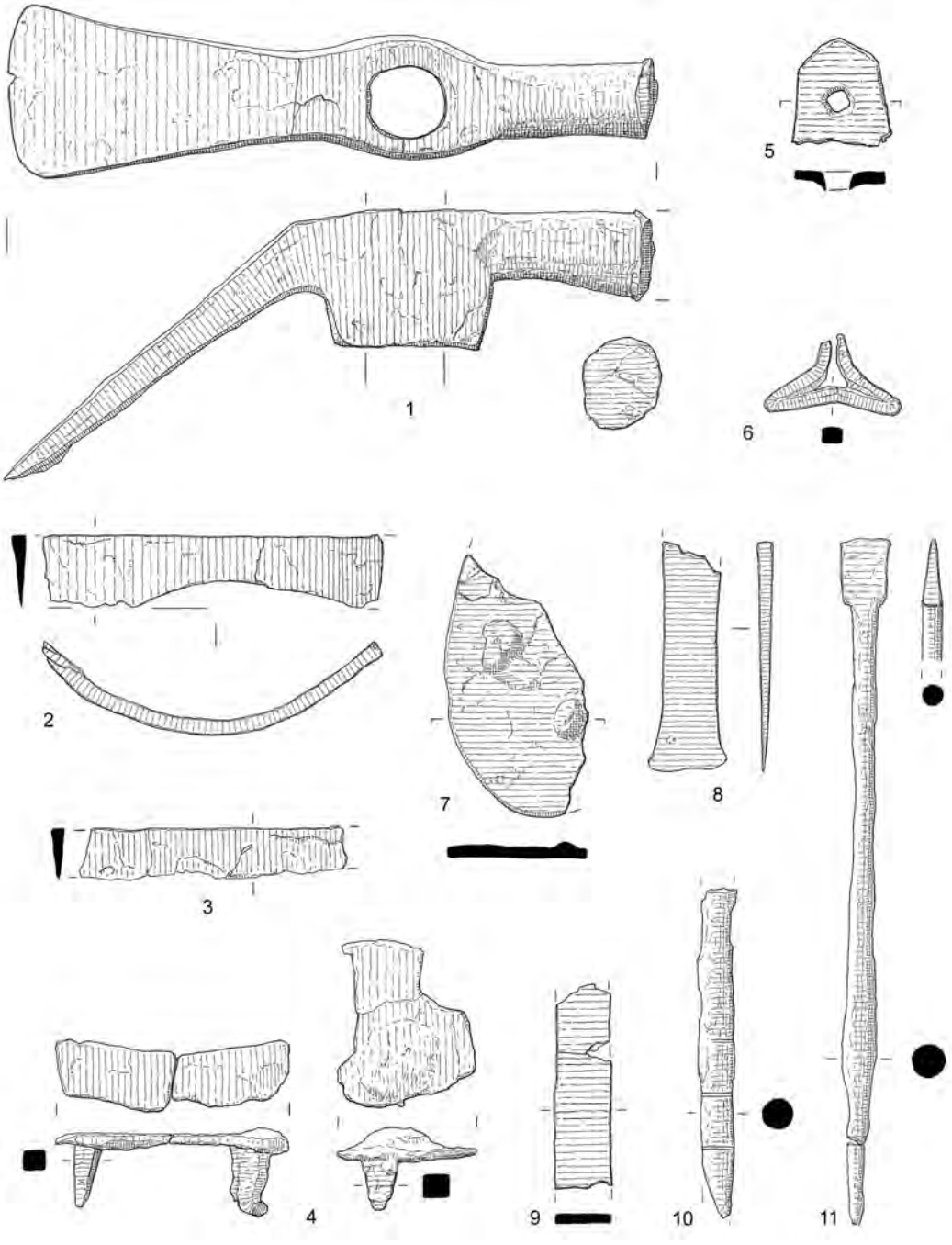

Fig. 18. Ironwork. Scale 1:2.

8. Modelling tool? Similar to Manning's type 3 (Manning 1985, 31–2, and pl. 13). One blade surviving with tapering section, sides splaying slightly to blade tip. Other blade and handle missing. Max. length 61mm. Find 1026, unstratified (122).
9. Strip. Two fragments of a flat iron strip or band. Width 16mm, thickness 2mm. Fill of enclosure ditch 106 (107).
10. Stylus? Fragment of circular sectioned rod up to 4mm in diam., with three inlaid decorative bands. Find 1082, fill of well 7 (7).
11. Stylus, Manning's type 2 (Manning 1985, 85, pl. 35). Tip missing, simple flattened eraser and circular sectioned stem thickening to slight shoulder. Max. length 98mm. Find 1002, fill of boundary ditch 9 (10).

QUERNS (Fig. 19)

The quernstones are all composed of a massive medium grain size Triassic sandstone with occasional small flakes of mica and feldspar (David A. Jenkins pers. comm.).

1. Quern. Possibly the lower stone of a 'Roman type' rotary quern (Crawford and Roder 1955) with the upper surface mostly fractured and missing. Diameter *c.* 560mm, thickness up to 72mm, central hole *c.* 60mm diameter. Fill of ditch 3 (4).
2. Quern. Two joining fragments, possibly from the lower stone of a 'Roman type' rotary quern (Crawford and Roder 1955), worn on the lower side. Diameter *c.* 320mm, thickness up to 47mm. Fill of posthole 133 (134).
3. Quern. Lower stone of a quern, upper surface worn and polished, central drilled pivot 27mm in diameter and 21mm deep. Up to 300mm across and 40mm thick. Fill of posthole 133 (134). Not illustrated.

BUILDING MATERIALS

Ceramic brick and tile[16]

A total of 131 fragments (11kg) of brick and 170 fragments (14.7kg) of tile were recovered from the 1994–95 excavations. No diagnostic fragments were identified in the brick assemblage, while the tiles included fragments of box flue (5 fragments), tegula (15 fragments), and imbrex (9 fragments), including two complete tiles from ditch 166. The distribution of the finds shows a concentration within the fills of ditch 95 (which produced 24% of the assemblage by weight) and ditch 166 (which produced 25% by weight). However, the general distribution offers no useful information other than indicating the presence of a structure or structures within the immediate area.

Burnt daub[17]

A total of 462 fragments (7.3kg) of daub was recovered from the 1994–95 excavations.

Stone architectural fragment

Fragment, 290 by 230 by 115mm across. Linear incisions on one surface may be tool marks, or possibly indicate that the stone was used for sharpening implements. Fill of boundary ditch 3 (4). Not illustrated.

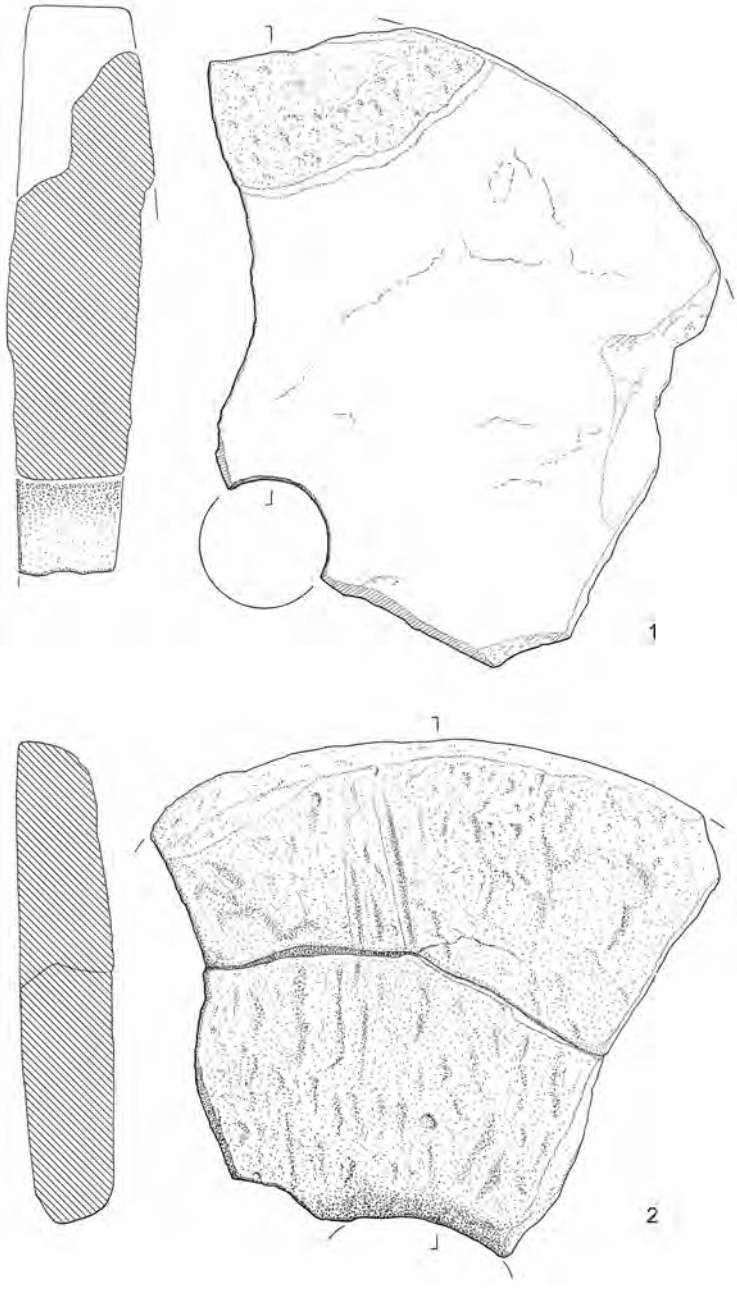

Fig. 19. Querns. Scale 1:4.

Stone roofing tiles
Fragments of stone roofing tile were recovered from the 1996 excavations.[18]

METALWORKING RESIDUES

A total of 119 fragments (1.4kg) of various slags were recovered from the 1994–95 excavations, including some fragments of smithing hearth. However, the contexts and distribution were not of any apparent significance and the assemblage was not studied in any detail.

CHARRED PLANT REMAINS

By Astrid E. Caseldine and Catherine J. Griffiths

Samples were taken for plant macrofossil analysis during the 1994–95 excavations with the aim of recovering information about the nature of any agricultural and crop processing activity associated with the settlement.

Sampling, processing and analysis
During the 1994–95 excavations samples were taken from a range of features, including boundary ditches, pits, a well (7) and a corn drier (132). The samples were processed by flotation using 1mm and 250 micron sieves. The samples were sorted and identified in the Archaeology Department, University of Wales, Lampeter, using Wild M5 microscopes. Identification was by comparison with modern reference material and standard reference texts including Schoch *et al.* (1988) and Berggren (1969; 1981). The results are presented in Tables 3–4. Nomenclature for plants other than cereals follows Stace (1991). Further environmental samples were taken during the 1996 excavation, an assessment of which was carried out by Elizabeth Pearson (1997), although it is not known whether any more detailed analysis was undertaken.

Cereal identification
Many of the grains were too poorly preserved to be determinable to species level and were therefore assigned either to an indeterminate group or a broad category such as *Triticum* sp. or *T. dicoccum*/*T. spelta*. Of the grain that was identifiable further most had the flat ventral surface typical of spelt (*T. spelta*), whilst a few grains had a dorsal ridge suggesting emmer (*T. dicoccum*), and a few had the more rounded appearance of bread wheat (*T. aestivum s. l.*). The glume width of the majority of the better preserved glume bases was wide and the glumes had the prominent nerves and curved appearance in transverse section of spelt. A few glume bases with a more prominent dorsal keel and weaker nerves resembled those of emmer The majority of the rachis fragments had longitudinal lines near the outer edge of the convex face, which is typical of hexaploid wheats such as spelt. As with the grain, a number of chaff remains were placed in intermediate or broader categories.

The barley (*Hordeum sativum*) either had the remains of lemmas and/or the angular appearance of hulled barley. The presence of twisted as well as straight grain indicated 6-row barley. This was confirmed by the presence of 6-row rachis but the presence of 2-row rachis demonstrated that 2-row barley was also present. Some grains had the typical ‘bullet shape’ of rye (*Secale cereale*). Oat (*Avena*) grains were present but the absence of identifiable floret bases meant that it was uncertain whether it was cultivated or wild.

Results

Three samples (1033 from context 11 in pit 191; 1014 from context 94 in pit 41; and 1001 from context 30 in boundary ditch 16) failed to produce any charred plant remains other than wood charcoal, which all the samples contained. The assemblage from the site as a whole was dominated by wheat, mainly spelt wheat with small amounts of emmer and bread/club wheat. Small quantities of hulled barley, both 2-row and 6-row, rye and oats, either wild or cultivated, occurred occasionally. Weed seeds included larger seeds such as brome (*Bromus*) and smaller seeds such as docks (*Rumex*). Other remains included stems and shoots of heather (*Calluna vulgaris*), rhizomes of grasses (*Poaceae*) and bracken (*Pteridium aquilinum*) leaves.

Within Area 1 the richest sample was from the stokehole of the corn dryer. It was dominated by wheat chaff, largely glume bases and rachis fragments, with smaller amounts of grain and weed seeds. Wheat, barley, rye and oat were all represented. The wheat was largely spelt although some emmer was possibly present. Some of the grain had germinated, and detached sprouted embryos were frequent. A possible fragment of broad bean (*Vicia faba*) was present. Heather remains also occurred. The kiln contained relatively little apart from wheat chaff, heather and rhizomes. The ditches contained a similar range of material, although in smaller quantities to that from the stokehole. Chaff, namely wheat glume bases, dominated. Wheat, barley and oat but no rye were recorded. Weed seeds were comparatively scarce, apart from docks which were quite frequent in one sample (1005). Brome occurred in small quantities in several samples. Heather remains and rhizomes of grasses were present in a number of samples. The well samples also produced a similar range of cereal material but with smaller amounts of chaff. One of the samples (1015) contained a small fragment which was possibly coriander (*Coriandrum sativum*). Weed seeds were scarce apart from in sample 1034 where docks were again frequent. Heather remains were quite common in a number of the samples. The assemblage from pit 36 was similar to that from the well and ditches although cereal, largely indeterminate, predominated. The final sample from Area 1, pit 152 was dominated by grain, mainly wheat, with very few chaff fragments or weed seeds. As in the stokehole sample, a number of the grains had germinated.

In Area 2 the samples from the two pits contained very little apart from a quantity of hazelnut fragments in 282. Wheat was present but the other grains were indeterminable and no chaff was recovered. A seed of rowan (*Sorbus aucuparia*) occurred in 285. The only other sample from this area was from boundary ditch 79. The plant remains were relatively scarce but hazelnut fragments were quite frequent as were remains of heather. An emmer/spelt glume base and spelt grain were recorded.

Discussion

Crop processing activity

The earliest environmental evidence from the site comes from two small pits, 282 and 285, in Area 2 which yielded pottery suggesting a Bronze Age date for the pits. Grain and weed seeds were few and the grain was not referable beyond *Triticum* sp. (wheat), preventing any detailed discussion of agriculture or crop processing activity during the Bronze Age. Both pits contained hazelnut (*Corylus avellana*) fragments which were relatively frequent in 282. The occurrence of hazelnut fragments and a rowan seed is in keeping with evidence from other sites in Wales and the rest of Britain for the use of wild resources during the Bronze Age (Caseldine 1990a; Greig 1991), although it is possible that the plant remains from these pits are intrusive and later in date. The only other sample from this area was from the earlier phase of a presumed field boundary, boundary ditch 79. Grain, chaff and weed seeds were again scarce and hazelnut fragments frequent. However, a cereal grain and a glume base were identifiable to *Triticum spelta* (spelt wheat), which is consistent with the finds of Antonine samian and a third-century Antonine jar and the suggested Roman date for the ditch. Similarly, the occurrence of heather remains is in keeping

with the evidence from the Roman ditches in Area 1. The only weed present was wild radish (*Raphanus raphanistrum*) which is a weed of cultivation. The relatively high number of hazelnut fragments in the ditch may reflect contemporary activity or be residual.

The remaining samples are all from Area 1 and suggest a largely similar picture, essentially the by-products from crop processing, basically fine-sieving residues which were used as fuel. The assemblage from the corn dryer is considered first as it provides some comparative evidence, suggesting that the origin of at least some of the material recovered from the well, pits and ditches may have been the corn dryer.

Roman corn dryers have been the subject of much investigation and the evidence has been reviewed by Veen (1989). From the composition of the charred plant assemblage found in them it is possible to get some indication of their use. At Plas Coch the evidence from the corn-drying kiln is too limited to draw any conclusions about the function of the dryer, particularly as the assemblage is probably the remnants of fuel originally from the stokehole. However, the large assemblage from the stokehole does give some indication of the possible use, although the assemblage, as well as containing material possibly derived from the drying floor, almost certainly contains material which was used as fuel, which complicates the interpretation. The assemblage contains a large quantity of chaff, notably wheat glume bases and rachis, and this along with at least some of the weed seeds probably represents sievings from crop processing used as fuel. Further evidence that the assemblage includes material used as fuel is the presence of wood charcoal (either from the burning of wood or charcoal) and heather remains. The latter may have originated from the burning of peat rather than heather per se. There is documentary evidence for the use of chaff and straw together with wood and/or peat as fuel, especially for malting (Hillman 1982). Some of the seeds could also be derived from the peat and the hazelnuts could have been brought in with wood used as fuel.

Whilst the chaff and weed seeds may reflect the by-products of crop-processing used as fuel, the presence of grain may indicate the use or uses made of the drier, although it is possible, for reasons discussed below, that the grain could have been deliberately used as fuel and not be related to its function. It is unlikely that the assemblage was derived from the accidental charring of whole ears in the drying chamber as this would lead to the presence of carbonised glume bases in approximately equal quantities to spelt grains, half the number of rachis internodes, straw fragments and large numbers of weed seeds. In this case the glume bases outnumber the grains. This cannot be as a result of differential preservation as grain is more likely to survive than glume bases (Boardman and Jones 1990). It could be argued that the assemblage represents accidental charring of whole ears with additional chaff used as fuel, but a larger quantity of weed seeds would also be expected, depending on agricultural practices (see below), as well as more evidence of straw. It is more likely it could be from the parching of fully ripe spikelets prior to pounding to release the grain from the chaff. This would produce an assemblage without the larger straw nodes and large weed heads. Equally, in areas with wet summers, a similar assemblage would be produced by drying grain stored as semi-clean spikelets. The drying of fully processed grain prior to storage or milling would result in grains, small amounts of glume bases and weed seeds the same size as the grain, or grain without any chaff and weed seeds. It is therefore possible that part of the assemblage is derived from any one of these activities along with additional chaff from fine sieving residues. However, the presence of a small quantity of sprouted grain and relatively large amount of detached sprouted embryos suggests that the corn dryer was used for drying to prevent spoilage prior to storage. Some brome seeds and possibly barley were also sprouted. Alternatively, the presence of glume bases, large weed seeds, sprouted grain and detached coleoptiles could be from the roasting of germinated grain to produce malt. However, if the corn dryer was used for this rather than drying then it is likely that most of the grain would be germinated, as for example in the case of the spelt found in corn-dryers at Catsgore,

Somerset (Hillman 1982). In this instance this does not appear to be the case, although it is difficult to be certain about much of the very poorly preserved grain. At Tiddington, Warwickshire, Moffett (1986) has argued that, although the percentage of sprouted grain was relatively small, the presence of far more detached coleoptiles than grain in certain samples may indicate malting. At Dan-y-Graig in south Wales, sprouted grain was recorded but not in sufficient quantities to suggest malting and it was concluded that the most likely use of the structure was for drying (Caseldine 1990b). On balance, it seems most likely that the corn dryer at Plas Coch was also used for drying clean grain, or grain within the spikelet, prior to storage, although the possibility of malting cannot be ruled out. A small amount of sprouted grain from a corn dryer at Tremadog was considered possibly to indicate that malting was one possible function of the structure (Kenney 2005).

The presence of emmer, bread wheat, barley, rye and possible broad bean in the corn dryer sample probably represents contaminants either from the field, whilst processing, or from an earlier use of the dryer.

The results from the ditches are similar to those from the corn dryer. Generally chaff predominates with smaller amounts of grain and weed seeds. The weed seeds and chaff are clearly the sievings from crop processing used as fuel, although this material is frequently used as animal fodder. The presence of heather again supports the former interpretation. It is possible that the remains represent material cleared out from the stokehole, but they could equally well be from hearth 124 or other fires or corn dryers at the settlement. Although there is some variation in the frequency and composition of remains in the samples from well 7, in most of the samples cereal, chaff and weed seeds were relatively scarce apart from samples 1015 and 1034 where weed seeds were more frequent. Heather remains were abundant in one or two samples. Basically the samples consist of waste material used as fuel and are likely to originate from similar sources as the material in the ditches. There was no evidence for any waterlogged remains such as recorded, for example, from wells at Prestatyn (Jones 1989) or Caerleon (Caseldine and Busby 1993). Similar results were recorded by Pearson (1997) who also examined two contexts from well 7 and concluded the remains could represent fuel.

The final two samples from Area 1 are from pits. Pit 36 contained more cereal than chaff although the former was largely indeterminate. Seeds were relatively frequent and heather remains abundant. Again the sample is interpreted as crop processing residue used as fuel, with the cereal the result of either accidental or deliberate charring. The last sample, from pit 152, differs from all the others from the site in that it is dominated by grain with few chaff remains and only weed seeds a similar size to the grain. This is clearly processed material prepared for storage or consumption. Although not all the grain has sprouted a good proportion *c.* 25–30% has, suggesting that this material had been discarded and thrown onto a fire because it had started to spoil. Alternatively, it could be from a crop that accidentally caught fire while being dried to prevent further spoilage. The sample is from a context (pit 152) that underlies and surrounds hearth 124. It presumably pre-dates the hearth although it is possible that that the charred material could have been raked out from the hearth and trodden into the surrounding context.

Palaeoeconomy, crop husbandry and the environment

Corn dryers would have been used both at settlements producing the crop and bringing it in from elsewhere. The presence of glume bases and rachis fragments provide no clue as the grain could have been transported in spikelet form. The role of the settlement is therefore difficult to determine, although as suggested by Veen (1992) the division of settlement sites into only two types, consumer and producer, is too simplistic. However, the evidence suggests that arable farming played a significant role in the local economy, although whether this was purely at a subsistence level or whether a surplus was being produced is not certain. The investigation of more sites in the area might lead to a more precise interpretation of the agricultural significance of different types of site and their economic importance.

Spelt was clearly grown in the area and, as already mentioned, the other cereals may simply be present as contaminants of spelt crops, but it is possible that they are under-represented in the fossil record and that, for example, barley was more widely grown in the area. A possible fragment of *Vicia faba* suggests broad beans may have been grown locally and a possible fragment of coriander (*Coriandrum sativum*) suggests the use of flavourings and a more varied diet at the settlement.

The generally low incidence of small weed seeds could result from cleaning the spikelets with a coarse sieve/riddle, reaping high on the straw, thorough weeding, or a combination of any of these practices. Weeds of cultivation include brome, corn cockle (*Agrostemma githago*), scentless mayweed (*Tripleurospermum inodorum*), redshank (*Persicaria maculosa*), fat hen (*Chenopodium album*) and climbers such as black bindweed (*Fallopia convovulus*) and cleavers (*Galium aparine*), the last considered indicative of autumn sowing (Hillman 1981). A number of these weeds could also represent waste or disturbed ground. Docks are the most frequent weed seed present and could reflect grassland as well as cultivation or waste ground. Further evidence for grassland is the presence of small grasses (Poaceae) and ribwort plantain (*Plantago lanceolata*). Fairy flax (*Linum catharticum*) and bedstraws (*Galium* sp.) occur in dry grassland and in heathland and could have been brought in with heather or peat. On other sites it has been suggested (Hillman 1981; Veen 1992) that heath grass (*Danthonia decumbens*) may have been a weed of cultivation, but its presence here may be from the use of peat or heather. Wetter environments are suggested by the presence of sedges and rushes in the samples which could indicate the cultivation of, or cultivation close to, damp ground, but again the presence of heather in the samples could mean they were brought in with peat.

Comparison with other sites

Spelt is commonly recorded from Welsh sites of Roman date but at some sites bread wheat dominates (see Caseldine 1990a; 1991): for example, in the wider north Wales region spelt dominated in samples from Caersws (Caseldine 1993; 1996) and Prestatyn (Jones 1989) but bread wheat dominated the assemblage from a Roman-British enclosure at Collfryn (Jones and Milles 1989), whilst in south Wales, for example, spelt was the dominant cereal at the late Iron Age and and Roman farmstead at RAF St Athan (Vaughan-Williams 2006) and bread wheat at Biglis (Parkhouse 1988). Elsewhere in Britain spelt also tends to dominate although bread wheat is frequent on a few sites (Greig 1991). Barley is found on most sites, for example in Wales at Loughor (Probert 1997) and Llandeilo (Caseldine and Griffiths 2007), and was often probably grown as an animal fodder crop rather than for human consumption, wheat being preferred for the latter. The importance of rye and oats is less certain but again could have been used for both human and animal consumption.

The occurrence of coriander at the farmstead, and the 'industrial' settlement at Prestatyn (Jones 1989) suggests trade between the native population and the military and the adoption of new foodstuffs, and might even indicate local cultivation rather than imported seeds. The presence of coriander at these sites is in keeping with plant records from other parts of Britain which indicate that although certain exotic foods were largely confined to military sites and major towns, other foodstuffs were more widely available (Van der Veen *et al*. 2007; 2008; Van der Veen 2008).

Conclusions

Most of the plant remains represent the sievings from crop processing. The corn dryer was probably used to dry grain to prevent spoilage, although the possibility of malting cannot be totally ruled out. One sample was clearly fully processed ready for storage or consumption but had been discarded because of sprouting. Spelt appears to have been the main crop grown in the area and the results are consistent with those from other parts of Wales and Britain.

Table 3. Charred plant remains from boundary/enclosure ditches

Feature	153	58	58	16	95	9	9	3	139	79
Context	154	59	60	33	148	62	62	151	140	80
Sample	1032	1024	1004	1040	1027	1003	1005	1028	1029	
Cereals										
T. cf. *dicoccum* – glume base	–	–	–	–	–	–	1	–	–	–
T. dicoccum/spelta – spikelet fork	–	2	2	–	–	2	–	–	–	–
T. dicoccum/spelta – glume base	7	–	–	3	–	15	20	1	105	1
T. spelta – grain	–	5	–	–	–	–	2	–	6	1
T. spelta – grain (sprouted, collapsed)	–	1	–	–	–	3	–	–	3	–
T. spelta – rachis	6	3	–	2	2	18	9	–	21	–
T. spelta – spikelet fork	2	–	–	–	–	5	–	–	4	–
T. spelta – glume base	15	42	15	–	6	19	11	1	145	–
T. cf. *spelta* – grain	2	–	1	–	1	–	–	–	3	–
T. cf. *spelta* – rachis	–	–	3	–	–	4	2	–	5	–
T. cf. *spelta* – spikelet fork	–	–	–	–	–	4	1	–	1	–
T. cf. *spelta* – glume base	3	4	1	–	–	15	11	–	2	1
Triticum spelta/aestivum – grain (spelt/bread wheat)	–	1	–	–	–	–	–	–	2	–
Triticum sp. – grain	1	4	–	–	–	11	–	–	14	1
Triticum sp. – grain (sprouted)	–	–	–	–	–	–	–	–	–	–
Triticum sp. – grain (sprouted, collapsed)	–	–	–	–	–	1	–	–	3	–
Triticum sp. – rachis	–	2	–	–	–	2	–	–	–	–
Triticum sp. – spikelet fork	–	–	–	–	–	–	–	–	13	
Triticum sp. – glume base	4	14	1	3	–	21	–	–	4	2
Triticum/Hordeum – grain (wheat/barley)	–	–	1	–	–	–	–	–	–	–
Hordeum sativum – twisted grain	–	–	–	–	–	–	–	–	2	–
Hordeum sativum – indet. grain	1	1	–	1	–	–	1	–	1	–
Hordeum sativum 6-row – rachis	9	–	1	1	1	1	5	–	22	–
Hordeum sativum 2-row – rachis	1	–	–	–	–	–	–	–	7	–
Hordeum sativum indet. rachis	–	–	–	–	–	–	2	–	–	–
Avena sp. – grain (oats)	–	2	–	–	–	3	2	–	–	–
Avena sp. – floret base	–	–	–	–	–	–	1	–	–	–
Avena sp. – awn frag	–	–	–	–	–	1	2	–	–	–
cf. *Avena* sp. – grain	1	–	–	–	–	–	3	–	–	–
Avena/Poaceae (oat/large grass)	1	–	–	–	2	–	–	12	2	–
Cerealia indet.	14	40	3	6	–	31	21	–	61	–
Cerealia indet. (sprouted, collapsed)	–	–	–	–	–	–	–	–	–	6
Cerealia sp. – detached embryo (un-sprouted)	–	–	–	–	–	–	1	–	1	–
Cerealia/Poaceae (cereal/large grass)	–	–	–	–	–	–	–	–	1	–
Cerealia/Poaceae – node	–	–	–	–	–	–	2	–	–	–
Other plant remains										
Ranunculus repens type (creeping buttercup)	–	–	–	–	–	–	1	–	–	–
Ranunculus sp. (buttercup)	–	–	–	–	–	1	–	–	–	–
Corylus avellana L. (hazel)	–	5	–	–	1	–	4	–	1	43
Chenopodium sp. (goosefoots)	–	–	–	–	–	–	1	–	–	–
Chenopodium/Atriplex	–	–	–	–	–	–	–	–	–	–

continued

Table 3. Charred plant remains from boundary/enclosure ditches (continued)

Feature	153	58	58	16	95	9	9	3	139	79
Context	154	59	60	33	148	62	62	151	140	80
Sample	1032	1024	1004	1040	1027	1003	1005	1028	1029	
Atriplex sp. (oraches)	1	–	–	–	–	–	–	–	–	–
Agrostemma githago L. (corncockle)	–	–	–	–	–	–	1	–	–	–
Caryophyllaceae sp. (pink family)	–	–	–	–	–	2	–	–	–	–
Persicaria maculosa Gray (redshanks)	1	1	–	–	–	–	–	–	–	–
Rumex acetosella L. (sheep's sorrel)	–	1	–	–	–	1	–	–	–	–
Rumex sp. (docks)	–	1	–	–	–	–	79	–	–	–
Viola sp. (violets)	–	–	–	–	–	–	–	–	–	–
Raphanus raphanistrum L. (wild radish)	–	–	–	–	–	–	1	–	–	1
Calluna vulgaris (L.) Hull flower heads (heather)	7	–	–	–	–	–	–	–	4	–
Calluna vulgaris (L.) Hull shoot frags	–	–	–	–	–	–	–	–	1	–
Calluna vulgaris (L.) Hull stem/root frags	30	90	2	–	–	21	–	–	79	2
cf. *Rubus* sp.	1	–	–	–	–	–	–	–	–	–
Potentilla erecta (L.) Raeusch (tormentil)	–	–	–	1	–	–	–	–	4	–
Trifolium sp. (clovers)	–	–	–	–	–	1	–	–	–	–
Apium cf. *graveolens*	–	–	–	–	–	–	1	–	–	–
Apiaceae sp. (carrot family)	–	–	–	–	–	–	5	–	–	–
Lamiaceae type (deadnettle family)	1	–	–	–	–	–	1	–	–	–
Plantago lanceolata L. (ribwort plantain)	1	1	–	–	–	–	–	–	–	–
Galium aparine L. (cleavers)	–	–	–	–	–	–	2	–	–	–
Galium sp. (bedstraws)	–	–	–	–	–	1	–	–	1	–
Juncus sp. seedheads	–	–	–	–	–	–	1	–	–	–
Luzula cf. *pilosa* (L.) Willd (hairy wood-rush)	–	–	–	–	–	–	–	–	2	–
Eleocharis palustris (L.) Roemer & Schultes/*uniglumis* (Link) Schultes (common spike-rush / slender spike-rush)	–	1	–	–	–	–	–	–	–	–
Carex sp. – bi-convex (sedges)	–	1	–	–	–	–	–	–	–	–
Carex sp. – trigonous	–	–	–	–	–	1	–	–	–	–
Bromus sp. (bromes)	4	2	1	–	–	4	1	–	1	–
cf. *Bromus* sp.	–	6	1	–	–	3	10	–	25	–
cf. *Bromus* sp. (sprouted)	–	–	–	–	–	–	–	–	–	–
Danthonia decumbens (L.) DC. (heath grass)	1	–	1	–	–	–	2	–	5	–
cf. *Danthonia decumbens* (L.) DC	–	–	–	–	–	–	–	–	1	–
Poaceae sp. (grasses)	–	–	2	–	–	2	2	–	2	–
Poaceae sp. rhizomes	7	3	3	–	–	–	–	–	5	–
Pteridium aquilinum (L.) Kuhn (bracken) leaf frags	–	–	–	–	–	1	3	–	3	–
Rhizomes	28	7	–	–	–	–	–	–	–	–
cf. Moss frag.	–	–	–	–	–	1	–	–	–	–
Flowerhead indet.	–	–	–	–	–	1	–	–	–	–
Total number of items	152	240	38	17	13	197	211	14	587	59
Volume (litres)	10	10	6	4	10	6	2	10	10	10
Items/litre	15.2	24	6.3	4.25	1.3	32.8	105.5	1.4	58.7	5.9

Table 4. Charred plant remains from Well 7

Context Sample	24 1038	26 1034	26 1039	27 1039	97 1015	99 1019	99 1021	99 1026
Cereals								
T. cf. *dicoccum* – grain	–	–	–	–	–	3	–	–
T. cf. *dicoccum* – spikelet fork	–	–	–	–	–	2	–	–
T. cf. *dicoccum* – glume base	–	–	–	–	–	–	–	–
T. dicoccum/spelta – grain (emmer/spelta)	–	–	–	–	–	4	–	–
T. dicoccum/spelta – spikelet fork	–	2	–	–	–	–	–	–
T. dicoccum/spelta – glume base	–	1	1	–	1	–	–	–
T. spelta – grain	–	1	–	–	–	3	–	–
T. spelta – rachis	–	1	–	–	2	–	3	–
T. spelta – spikelet fork								
T. spelta – glume base	–	7	2	–	5	–	8	1
T. cf. *spelta* – grain	–	1	–	–	–	2	–	–
T. cf. *spelta* – grain (sprouted, collapsed)	–	3	–	–	1	–	–	–
T. cf. *spelta* – rachis	–	3	2	–	1	–	1	–
T. cf. *spelta* – spikelet fork	–	–	–	–	–	–	–	–
T. cf. *spelta* – glume base	1	1	–	–	–	–	–	–
T. spelta/aestivum – grain (spelt/bread wheat)	–	1	–	–	1	3	–	–
Triticum aestivum s. l. – grain (bread/club wheat)	–	–	2	–	–	–	–	–
T. cf. *aestivum* s. l. – grain	–	–	1	–	–	–	–	–
Triticum sp. – grain	–	1	–	–	–	2	–	–
Triticum sp. – rachis	–	–	–	–	–	–	1	–
Triticum sp. – spikelet fork	–	–	–	–	–	–	–	–
Triticum sp. – glume base	–	12	4	–	–	–	–	–
Secale cereale – grain (rye)	–	–	–	–	–	1	–	–
cf. *Secale cereale* – grain	–	–	–	–	–	–	–	–
Triticum/Hordeum – grain (wheat/barley)	–	1	–	1	–	1	–	–
Hordeum sativum – straight grain (hulled barley)	–	1	–	–	–	–	–	–
Hordeum sativum – twisted grain	–	1	–	–	–	1	–	–
Hordeum sativum – indet. grain	1	7	–	–	1	1	1	–
Hordeum sativum – indet. Grain (sprouted, collapsed)	–	2	1	–	–	–	–	–
Hordeum sativum – detached embryo	–	1	–	–	–	–	–	–
Hordeum sativum 6-row – rachis	–	4	1	–	–	–	–	–
Hordeum sativum 2-row – rachis	–	1	–	–	–	–	–	–
Hordeum sativum indet. rachis	–	1	–	–	–	–	–	–
Hordeum/secale – rachis (barley/rye)	–	1	–	–	–	–	–	–
Avena sp. – grain (oats)	–	2	9	–	–	1	–	–
cf. *Avena* sp. – grain (with lemma)	–	1	–	–	–	–	–	–
cf. *Avena* sp. – grain	–	4	–	–	–	–	–	–
Avena/Bromus (oat/bromes)	–	–	–	–	–	–	–	–
Avena/Poaceae (oat/large grass)	–	2	–	–	–	–	–	–
Cerealia indet.	–	62	14	–	–	17	–	1
Cerealia indet. (sprouted, collapsed)	–	–	–	2	2	–	–	–
Other plant remains								
Ranunculus sp. (buttercup)	–	–	1	–	–	–	–	–
Corylus avellana L. (hazel)	–	2	–	–	1	–	–	–
Chenopodium album L. (fat-hen)	–	14	–	–	–	–	–	–
Chenopodium sp. (goosefoots)	–	1	–	–	–	–	–	–
Chenopodium/Atriplex	–	16	–	–	–	–	–	–

continued

Table 4. Charred plant remains from Well 7 (continued)

Context	24	26	26	27	97	99	99	99
Sample	1038	1034	1039	1039	1015	1019	1021	1026
Stellaria sp. (stitchworts)	–	–	–	–	1	–	–	–
Persicaria maculosa Gray (redshanks)	–	1	–	–	–	–	–	–
Persicaria lapathifolium L. (Gray) (pale persicaria)	–	2	–	–	–	–	–	–
Polygonum aviculare L. (knotgrass)	–	–	–	–	1	–	–	–
Rumex acetosella L. (sheep's sorrel)	1	3	–	–	–	–	1	–
Rumex sp. (docks)	1	39	1	–	–	–	–	–
Viola sp. (violets)	1	–	–	–	–	–	–	–
Calluna vulgaris (L.) Hull flower heads (heather)	–	9	3	–	191	–	20	–
Calluna vulgaris (L.) Hull shoot frags	–	–	5	–	320	–	4	–
Calluna vulgaris (L.) Hull stem/root frags	11	240	17	–	120	–	52	25
Potentilla erecta (L.) Raeusch (tormentil)	–	1	–	–	1	–	–	–
Potentilla sp.	–	1	–	–	4	–	–	–
Trifolium pratense L. (red clover)	1	–	–	–	–	–	–	–
Trifolium sp. (clovers)	1	–	–	–	–	–	–	–
cf. *Coriandrum sativum* L. (coriander)	–	–	–	–	1	–	–	–
Aethusa cynapium L. (fool's parsley)	–	–	–	–	1	–	–	–
Apium graveolens L. (wild celery)	1	–	–	–	–	–	–	–
Apiaceae sp. (carrot family)	–	–	–	–	2	–	–	–
Plantago lanceolata L. (ribwort plantain)	–	9	–	–	–	–	–	–
Galium cf. *palustre* L. (common marsh-bedstraw)	–	2	–	–	–	–	–	–
Galium sp. (bedstraws)	1	–	–	–	–	–	–	–
Sambucus nigra L. (elder)	–	1	–	–	–	–	–	–
Tripleurospermum inodorum (L.) Shultz-Bip (scentless mayweed)	–	5	–	–	–	–	–	–
Juncus sp. (rushes)	–	13	–	–	–	–	1	–
Juncus sp. seedheads	–	5	–	–	–	–	–	–
Eleocharis palustris (L.) Roemer & Schultes/ *uniglumis* (Link) Schultes (common spike, rush/slender spike-rush)	–	1	–	–	–	–	–	–
Carex sp. – bi-convex (sedges)	–	10	–	–	–	–	–	–
Carex sp. – trigonous	–	5	–	–	–	–	–	–
Bromus sp. (bromes)	–	9	3	–	1	–	–	–
cf. *Bromus* sp.	–	1	–	–	–	–	–	–
Danthonia decumbens (L.) DC. (heath grass)	–	2	–	–	27	–	–	–
cf. *Danthonia decumbens* (L.) DC.	–	–	1	1	–	–	–	–
Poaceae sp. (grasses)	–	1	–	1	–	–	–	–
Poaceae sp. (small grasses)	–	31	–	–	–	–	–	–
Poaceae sp. rhizomes	1	14	–	–	5	–	–	–
Pteridium aquilinum (L.) Kuhn (bracken) leaf frags	–	8	–	–	–	–	–	–
Equisetum sp. stem frags (horsetails)	–	–	–	–	1	–	–	–
Large rhizomes	–	–	–	–	2	–	–	–
Rhizomes	–	16	5	–	50	–	–	–
Total number of items	21	585	73	4	743	41	91	27
Volume (litres)	4	10	2	3	10	0.5	5	7
Items/litre	5.25	58.5	36.5	1.3	74.3	82	18.2	3.9

Table 5. Charred plant remains from miscellaneous features

Feature	Kiln 132 drying chamber	Kiln 132 stokehole	Pit 36	Pit 152	Pit 282	Pit 285
Context	101	155	38	142	283/4	286/7
Sample	1022	1031	1009	1030		
Cereals						
Triticum dicoccum – glume base (emmer)	–	–	2	–	–	–
T. cf. *dicoccum* – grain	–	–	–	3	–	–
T. cf. *dicoccum* – spikelet fork	–	–	–	–	–	–
T. cf. *dicoccum* – glume base	–	1	–	–	–	–
Triticum dicoccum/spelta – grain (emmer/spelta)	–	2	–	14	–	–
Triticum dicoccum/spelta – grain (sprouted)	–	2	–	–	–	–
Triticum dicoccum/spelta – grain (cf. sprouted)	–	–	–	1	–	–
T. dicoccum/spelta – spikelet fork	1	51	13	–	–	–
T. dicoccum/spelta – glume base	–	580	3	–	–	–
Triticum spelta – spikelet (spelt)	–	3	–	–	–	–
T. spelta – grain	–	–	1	98	–	–
T. spelta – grain (sprouted)	–	37	–	58	–	–
T. spelta – grain (sprouted - collapsed)	–	15	–	22	–	–
T. spelta – rachis	–	293	2	–	–	–
T. spelta – spikelet fork	–	23	–	1	–	–
T. spelta – glume base	2	490	–	3	–	–
T. cf. *spelta* – grain	–	10	2	1	–	–
T. cf. *spelta* – spikelet fork	–	2	1	–	–	–
T. cf. *spelta* – glume base	1	318	4	1	–	–
Triticum spelta/aestivum – grain (spelt/breadwheat)	–	7	–	–	–	–
Triticum sp. – grain	1	175	–	127	2	2
Triticum sp. – grain (sprouted)	–	6	–	7	–	–
Triticum sp. – grain (sprouted, collapsed)	–	39	–	–	–	–
Triticum sp. – rachis	1	1	2	1	–	–
Triticum sp. – spikelet fork	–	–		–	–	–
Triticum sp. – glume base	8	8	–	2	–	–
Triticum/Secale – grain (wheat/rye)	–	1	–	1	–	–
Secale cereale – grain (rye)	–	1	–	1	–	–
cf. *Secale cereale* – grain	–	–	–	1	–	–
Triticum/Hordeum – grain (wheat/barley)	–	4	1	–	–	–
Hordeum sativum – straight grain (hulled barley)	–	5	–	1	–	–
Hordeum sativum – twisted grain	–	–	–	–	–	–
Hordeum sativum indet. grain	–	9	–	2	–	–
Hordeum sativum indet. Grain (sprouted, collapsed)	–	3	6	–	–	–
Hordeum sativum 6-row – rachis	2	13	2	–	–	–
Hordeum/secale – rachis (barley/rye)	–	–	1	–	–	–
Avena sp. – grain (oats)	–	–	4	–	–	–
Avena sp. – grain (sprouted)	–	1	–	–	–	–
cf. *Avena* sp. – grain (with lemma)	–	1	–	–	–	–
Avena /Bromus (oat/bromes)	–	–	–	2	–	–
Avena /Poaceae (oat/large grasses)	–	–	1	–	–	–
Cerealia indet.	2	202	–	–	–	–
Cerealia indet. (sprouted - collapsed)	–	21	48	–	3	7
Cerealia sp. – detached embryo (sprouted)	–	209	–	–	–	–
Cerealia sp. – detached embryo (un-sprouted)	–	26	–	–	–	–
Cerealia/Poaceae (cereal/large grass)	–	1	4	–	–	–

continued

Table 5. Charred plant remains from miscellaneous features (continued)

Feature	Kiln 132 drying chamber	Kiln 132 stokehole	Pit 36	Pit 152	Pit 282	Pit 285
Context	101	155	38	142	283/4	286/7
Sample	1022	1031	1009	1030		
Other plant remains						
Ranunculus repens type (creeping buttercup)	–	1	–	–	–	–
Corylus avellana L. (hazel)	–	29	1	1	34	2
Chenopodium sp. (goosefoots)	–	2	–	–	–	–
cf. *Agrostemma githago* L.	–	1	–	–	–	–
Caryophyllaceae sp. (pink family)	–	–	–	–	–	–
Persicaria maculosa Gray (redshanks)	–	–	8	–	–	–
Fallopia convolvulus (L.) A. Love (black bindweed)	–	1	–	–	–	–
Rumex acetosella L. (sheep's sorrel)	–	2	–	–	–	–
Rumex sp. (docks)	–	1	–	–	–	–
Viola sp. (violets)	–	1	–	–	–	–
Raphanus raphanistrum L. (wild radish)	–	1	–	–	–	–
Calluna vulgaris (L.) Hull (heather) flower heads	4	–	32	–	–	–
Calluna vulgaris (L.) Hull shoot frags	–	–	1	–	–	–
Calluna vulgaris (L.) Hull stem/root frags	33	17	125	2	–	–
Rubus sp. (brambles)	–	1	–	–	–	–
Potentilla erecta (L.) Raeusch (tomentil)	–	1	3	–	–	–
Aphanes arvensis L. (parsley piert)	–	1	–	–	–	–
cf. *Aphanes arvensis* L.	–	1	–	–	–	–
Sorbus aucuparia L. (rowan)	–	–	–	–	–	1
cf. *Vicia faba* L (broad bean)	–	1	–	–	–	–
Vicia L. sp. (vetches)	–	3	1	–	–	–
Medicago lupulina L. (black medick)	–	1	–	–	–	–
Linum catharticum L. (fairy flax)	–	1	–	–	–	–
Apium sp. (marshworts)	–	1	–	–	–	–
Apiaceae sp. (carrot family)	–	2	–	–	–	–
Lamium sp. (dead nettles)	–	–	1	–	–	–
Galeopsis sp. (hempnettles)	–	1	–	–	–	–
Veronica sp. (speedwell)	–	7	–	–	–	–
Plantago lanceolata L. (ribwort plantain)	–	3	–	–	1	–
Galium sp. (bedstraws)	–	2	–	–	–	–
Tripleurospermum inodorum (L.) Shultz-Bip (scentless mayweed)	–	5	–	–	–	–
Juncus sp. (rushes)	–	8	–	–	–	–
Juncus sp. seedheads	–	2	–	–	–	–
Carex cf. *elongate* (elongated sedge)	–	1	–	–	–	–
Carex sp. – bi-convex (sedges)	–	2	–	–	–	–
Carex sp. – trigonous	–	1	–	–	–	–
Bromus sp. (bromes).	1	75	–	–	–	–
Bromus sp. (sprouted)	–	9	1	–	–	–
cf. *Bromus* sp.	–	17	–	3	–	–
cf. *Bromus* sp. (sprouted)	–	3	1	–	–	–
Danthonia decumbens (L.) DC. (heath grass)	1	–	–	1	–	–
Poaceae sp. (grasses)	–	19	1	–	–	–
Poaceae sp. (small grasses)	–	47	–	–	–	–
Poaceae sp. rhizomes	–	–	18	–	3	4
Rhizomes	3	3	29	–	–	–
Leaf bud	–	–	–	–	1	–
Total number of items	60	2834	319	354	44	16
Volume (litres)	2	15	6	10	40	80
Items/litre	30	188.9	53.2	35.4	1.1	0.2

DISCUSSION

By Jeffrey L Davies and Nigel W Jones

The development of the large retail development at Plas Coch, on the western outskirts of Wrexham, during 1994–96, led to the discovery of a significant area of Roman occupation dating from the late first century to the third or possibly fourth century AD, together with some evidence for earlier, prehistoric activity in the form of pottery and flints. Although the excavated areas were of a significant size it is regrettable that much of the development area had already been lost to archaeologists before the significance of the site came to light. Consequently, the results can only provide a suggested interpretation of the evidence since it is clear that the occupation spread over a considerably larger area than that investigated and only partial plans of the major features were uncovered.

The available dating evidence from the excavations as a whole was generally insufficient to provide close dating for individual features, although it is possible to suggest three mains phases of activity, based largely on the pottery, together with observations on the alignment of features and such relationships as existed. The site would appear to be a thoroughly Romanised and prosperous farming settlement which may have its origins in the late first century, although the main period of occupation began in the mid to late second century, continuing until the later third century or early fourth century. Activity was focused on a rectangular enclosure which may have originally been defined by a timber palisade, later replaced by a bank and ditch which was recut on at least one occasion. Within the enclosure there is evidence for a timber building founded on earth-fast posts, which may have included an apse and, although not dated securely, is likely to belong to the Hadrianic–Antonine period, or slightly later. This building was replaced by a more substantial structure set on cobbled foundations and with a stone tiled roof. The lack of structural stonework may suggest that the superstructure was largely timber-framed, perhaps set on sleeper walls. This may have been built during the early to mid third century and was later enlarged by the addition of an apse at the south-west end, continuing in use possible until the early fourth century. The building was positioned against the north-west side of the enclosure and, if freestanding, is unlikely to have been the main structure, although it could represent the end of a much larger building. There is some evidence for continued activity in the later third to mid fourth centuries, including the suggestion of another building to the north of Area 2.

The enclosure was evidently set within a landscape of regular fields, and including a trackway, delimited by bank and ditch boundaries which appear to have been maintained throughout the period of occupation. There was further evidence for structures within these fields, including three wells, a corn-drying kiln and a possible timber building which included a hearth, although no plan could be determined.

The regular agricultural landscape suggested at Plas Coch would appear to conform to Romano-British examples from elsewhere in Britain, as for example, at Dunston's Clump near Bawtry, Nottinghamshire. Here, aerial photography has revealed a landscape composed of ditched field boundaries running in roughly parallel lines, with other shorter ditches connecting them (Jones and Mattingly 1990, 251). At Stanwick a relatively modest villa has been uncovered set amongst a series of irregular sub-rectangular fields with at least three surrounding enclosures linked to trackways, each incorporating a number of buildings (Jones and Mattingly 1990, 246). Although villas are often considered to be the diagnostic feature of the Romano-British landscape, rural buildings of this type appear to have been slow to spread into this area, the nearest known example being at Tarporley, Cheshire, 27 kilometres to the north-east (Jones and Mattingly 1990, 241, fig. 7.6). At Plas Coch the excavated area revealed only a fragment of the field system, but the distance of 142m between two parallel boundary ditches (3 and 169) is equivalent to 4 *actus*, the standard unit for Roman land division, suggesting that a deliberate and regular land division existed.

Charred plant remains, mostly representing sievings from crop processing subsequently used as fuel, give some indication of the palaeoeconomy and crop husbandry during the Romano-British period. The most significant sample came from the stokehole of the corn dryer and was dominated by wheat chaff and heather. Although the evidence was too limited to be conclusive, it would seem likely that the corn dryer was used for drying crops to prevent spoilage prior to storage. The assemblage as a whole was dominated by wheat, mainly spelt, but also including emmer and bread/club wheat, with hulled barley (both 6-row and 2-row) and oats also present. Since corn dryers are likely to have been present within settlements producing the crop and those processing and consuming it, it is not possible to draw any further conclusion regarding the role of the settlement at Plas Coch. However, the evidence does suggest that arable farming played a significant role in the local economy.

The ceramic and numismatic evidence from Plas Coch suggests a site which is out of the ordinary for a simple Romanised rural farming settlement, such as that excavated at Birch Heath, near Tarporley (Fairburn 2003), and one possibility is that it was a small villa. The quantity of Roman brick and tile from Plas Coch indicates the presence of at least one substantial, and therefore potentially higher status building, and there can be no doubt that occupants were thoroughly Romanised and well used to coinage and higher status pottery. The closest known villa is at Eaton by Tarporley, which was discovered in 1979 and excavated in 1980–82. The site was first occupied by a simple timber building which was probably destroyed by fire and replaced in stone around AD 170–200. It has five main rooms and two projecting wings, one of which contained a bathhouse. The villa was later rebuilt in the late third century when an extra storey was added to the main range and may have continued in use until the late fourth century (Mason 1983).

Until recently Wales was generally seen as being outside the area where villas might be expected. This changed in 2006 when parchmarks revealed a rectangular, stone building at Abermagwr, near Aberystwyth, set within a bivallate, rectangular enclosure, which had been previously identified in 1979. Geophysical survey and excavation has since confirmed the site as a small late-Roman villa dating to the late third and early fourth centuries AD (Driver and Davies 2010).

Plas Coch produced a significant quantity of Hadrianic to early third-century samian, and amphorae fragments are much more common than might be expected. Although dominated by Dressel 29 oil amphorae, Pelichet 47 South Gaulish wine amphorae are also present. Again, this is most unusual and highlights the status of the inhabitants. In his unpublished report on the pottery from the 1996 excavations, Jeremy Evans (1998a) commented that, 'the quantity of sherds alone from this site would seem to rule out its being a basic rural site, and there is little evidence that villas were generally well supplied with such, their only being common on urban and especially military sites'. He also interprets the ceramic pattern from the site (proportion of jars to tablewares) as indicative of a community with a strong immigrant and military connection. It should also be noted, however, that the excavations were only able to investigate part of the site and in all probability this did not include the main focus of activity.

The quantity of late first- to second-century coins from the site is also unusual. In comparison, the Llanwit Major villa produced not a single coin prior to AD 253–68, though this probably reflects the scale of excavation and the failure to adequately explore the earliest deposits on the site, while Whitton produced only four pre-third-century coins, one each of Domitian and Hadrian and two of Trajan. The latter total is broadly comparable to Plas Coch, although here the coin list takes us down to Marcus Aurelius and Commodus. However, a comparison with the coinage from Pentre Farm, Flint is perhaps more instructive, with 12 coins of late first- to late second-century date, raising the possibility that Plas Coch may be more in keeping with an official, administrative establishment.

Whether the occupation at Plas Coch was essentially a small villa or had an association with Roman administration it is worth considering why such a settlement might be located within 20 kilometres of

Chester. As noted above, the substantial nature of the buildings, together with the numismatic and ceramic evidence, points to a community with a remarkable affinity for a very Romanised lifestyle. One possibility is that there may be a link to veteran settlement in the area. We know that veterans were settling in the vicinity of the legionary fortress at Chester before the end of the first century (see RIB 478, a veteran of II Adiutrix, datable to before AD 86/7), and there are also tombstones of veteran of XX Valeria Victrix, again from the fortress wall (RIB 495, 534, 517 and 526). Although many will have settled in the *canabae* and in urbanised settlements such as Heronbridge and Wilderspool, there may well have been others who chose to purchase land (or invest in it). We also know that veterans from the *auxilia* settled in Cheshire in the early second century as is indicated by diploma evidence: one of a *decurion* from a cavalry regiment found at Malpas (RIB 2401.1) and another at Middlewich (RIB 2401.3). It is tempting to take this one stage further and raise the possibility that the regular land division at Plas Coch could indicate the parcelling of land for the settlement of veterans from the fortress at Chester, their descendants ultimately rising to a position of some status.

ACKNOWLEDGEMENTS

During the 1994–95 excavations supervision and recording was undertaken by the author, together with Stephen Grenter, Clwyd County Council, and Bill Slater and Karina Kucharski, Wrexham Maelor Borough Council, funding for the work carried out by the Clwyd-Powys Archaeological Trust being met by Cadw. The excavations were made possible by the co-operation of Gallifords Northwest. The 1996 excavations were supervised by Gerry Wait and later Jo Perkins for Gifford and Partners and undertaken on behalf of Audley Developments Ltd. Particular thanks are due to Jeremy Evans for his work on the pottery, and also to S. Rátkai and R. Rees.

Cadw has funded the analysis of plant remains and finds conservation from the 1994–95 excavations and have also generously funded the production of this report. Pottery drawings are by Wendy Owen and other finds drawings are by Brian Williams. Thanks are also due to all the specialists who have contributed to this report as well as to Phil Parkes of the School of History and Archaeology, Cardiff University for finds conservation, and to Stephen Grenter of Wrexham Museum.

NOTES

1. Clwyd-Powys Archaeological Trust (CPAT), 41 Broad Street, Welshpool, SY21 7DL.
2. A single sherd of prehistoric pottery is recorded from the 1996 excavations (Evans 1998a, 74).
3. The 1996 excavations produced 158 sherds of samian, representing a maximum of 110 vessels (Dickinson 1998). The material ranges from the Flavian-Trajanic period to the late second century or the first half of the third.
4. Two further potters' stamps are reported from the 1996 excavations (Dickinson 1998, 79).
5. Mortaria represented 1.1% of the total ceramic assemblage from the 1996 excavations; two fabric types are represented, Holt and Mancetter-Hartshill (Evans 1998a, 66–7).
6. The report was prepared by WJO on the basis of comments from PVW.
7 A total of 51.78kg (3,596 sherds) were recovered from the 1996 excavations which is the subject of an unpublished archive report by Jeremy Evans (1998a).
8. Oxidized Severn Valley wares and sandy, Cheshire Plain wares similarly accounted for a large proportion (56.3%) of the 1996 assemblage (Evans 1998a). Several of the sherds are misfired or

slightly wastered, suggesting that the source of this fabric is either at Plas Coch or in its immediate vicinity.

9. Black-burnished ware (BB1) represented 19.3% of the 1996 assemblage by count and 18.2% by weight (Evans 1998a).
10. Grey wares likewise only made up a relatively small proportion (10%) of the 1996 assemblage (Evans 1998a).
11. Whitewares comprised only 0.5% of the total 1996 assemblage and no forms were identified (Evans 1998a).
12. The archive report by Jeremy Evans (1998a) makes the following observations: 'There are but two shell-tempered sherds from the site, both of which appear to be Southern Shell-tempered ware, probably from Harrold and very likely from Northamptonshire. This fabric becomes the dominant cooking ware in much of central England north of the Thames in the later fourth century and is used in quantity at Wroxeter and even Segontium. The one rimsherd from this site is of the earlier jar form and perhaps dates to the later 3rd or early 4th century when the fabric rarely travelled as far as this'.
13. White-slipped flagon fabrics represented 1.2% of the total 1996 assemblage, and include a ring-necked flagon with a prominently beaded rim, an everted rimmed, lid-seated, constricted-necked jar or jug, a constricted-necked jar with wedge-shaped rim and a possible bowl with a collared, reeded rim (Evans 1998a)
14. A number of finewares represented 1.5% of the total 1996 assemblage. The largest group are Nene Valley sherds, followed by Rhenish ware sherds (Trier?), Holt mica-dusted ware, various Wilderspool wares, and a scrap of Oxfordshire colour-coated ware. Jeremy Evans (1998a) observed that 'The forms suggest that 2nd century finewares were mainly supplied by Holt and Wilderspool with Nene Valley and Rhenish material supplying most of the 3rd century material'.
15. Amphora sherds were again surprisingly common in the 1996 assemblage, amounting to 5.2% of the assemblage by count or 24.1% by weight and likewise included Spanish Dressel 20 and South Gaulish Pélichet 47 forms (Evans 1998a).
16. A total of 236 fragments (6.3kg) of tile, all apparently tegulae and imbrexes is recorded from the 1996 excavations, the majority of the tile comes from Area 1 (51% compared with 27% from Area 3) (Evans and Ratkai 1998).
17. A total of 33 fragments (246g) of daub is recorded from the 1996 excavations (Evans 1998b).
18. 34 stone tile fragments are recorded from stratified Roman deposits from the 1996 excavations, all of siltstone, and two with nail holes. The vast majority are from Area 3 and suggested that a structure with the stone tiled roof lay in this area (Evans and Ratkai 1998).

BIBLIOGRAPHY

Abbreviations

O = Oswald 1936–7
RIB = Collingwood and Wright 1965
RIC = Mattingly and Sydenham 1923–1988
RSC = Seaby 1980
S&S = Stanfield and Simpson 1958 and 1990 (the date is only given where one edition differs from the other)

Atkinson, D., 1942. *Report on Excavations at Wroxeter (the Roman City of Viroconium) in the county of Salop 1923–27* (Oxford: Oxford University Press).

Berggren, G., 1969. *Atlas of seeds and small fruits of Northwest-European plant species with morphological descriptions. Part 2. Cyperacea*e (Stockholm: Swedish Museum of National History).

——1981. *Atlas of seeds and small fruits of Northwest-European plant species with morphological descriptions. Part 3. Salicaceae-Cruciferae* (Arlow).

Blockley, K., 1989. 'Excavation on the Romano-British Settlement at Ffrith, Clwyd, 1967–9', *Flintshire Hisorical Society Journal* 32, 135–66.

Boardman, S. and Jones, G., 1990. 'Experiments on the effects of charring on cereal plant components', *Journal of Archaeological Science* 17, 1–11.

Boon, G. C., n.d. 'Objects of Bronze and other Copper Alloy Finds from the Extra-Mural Settlement, Caerleon', unpublished report, National Museum Wales.

Boon, G. C. and Savory H. N., 1975. 'A silver trumpet brooch with relief decoration, parcel gilt, from Carmarthen, and a note on the development of the type', *Antiquaries Journal* 55, 41–61.

Britnell, J., 1989. *Caersws Vicus, Powys: Excavations at the Old Primary School, 1985–86,* British Archaeological Reports, British series 205 (Oxford).

Britnell, W. J., Silvester, R. J., Gibson, A. M., Caseldine, A. E., Hunter, K. L., Johnson, S., Hamilton-Dyer, S. and Vince, A. 1997. 'A middle Bronze Age round-house at Glanfeinion, near Llandinam, Powys', *Proceedings of the Prehistoric Society* 63, 179–97.

Burnham, B. C., 1995. 'Plas Coch, Wrexham', *Britannia* 26, 326–7.

——1996. 'Plas Coch, Wrexham', *Britannia* 27, 390.

Caseldine, A. E., 1990a. *Environmental Archaeology in Wales* (Lampeter: St David's University College).

——1990b. 'The archaeobotanical evidence from a Roman 'T'-shaped kiln at Dan-y-Graig', in R. Newman, 'Excavations of a Romano-British building at Dan-y-Graig, Porthcawl, Mid Glamorgan (SS 8407 7805)', *Bulletin of the Board of Celtic Studies* 37, 274–7.

——1991. 'Environmental archaeology and the Roman period in Wales: recent work', in B. C. Burnham and J. L. Davies (eds), *Conquest, Co-existence and Change*, Trivium 25 (1990), 172–184.

——1993. 'Roman charred grain deposit from Caersws', in N. W. Jones, 'Caersws Roman fort and vicus, Montgomeryshire, Powys, 1984–92', *Montgomeryshire Collections* 81, 83–4.

——1996. 'Charred plant remains from Caersws 46', in N. W. Jones, 'Excavations within the Roman vicus at Caersws, 1989–93', *Montgomeryshire Collections* 81, 29–32.

——2010. 'The military impact on the environment and economy', in B. C. Burnham and J. L. Davies (eds), *Roman Frontiers and the Marches* (Aberystwyth, RCAHMW).

Caseldine, A. E. and Busby, P. A., 1993. 'Plant remains', in J. D. Zienkiewicz, 'Excavations in the *Scamnum Tribunorum* at Caerleon: the Legionary Museum site, 1983–5', *Britannia* 24, 136–138.

Caseldine, A. E. and Griffiths, C. G., 2007. 'Assessment of the Charred Plant Remains from the Llandeilo Roman Forts', unpublished report prepared for Cambria Archaeology.

Casey, P. J., Davies, J. and Evans, J., 1993. *Excavations at Segontium (Caernarfon) Roman fort, 1975–1979*, CBA Research Report 90 (London: Council from British Archaeology).

Collingwood, R. G. and Wright, R. P., 1965. *The Roman Inscriptions of Britain* (Oxford: Clarendon Press).

Crawford, O. G. S. and Roder, J., 1955. 'The Quern-quarries of Mayen in Eifel', *Antiquity* 29, 68–75.

Dickinson, B., 1998. 'The Plas Coch samian ware', in Gifford and Partners 1998, 77–9.

Driver, T. and Davies, J. L., 2010. 'Abermagwr Romano-British Villa, Trawsgoed, near Aberystwyth', *Archaeology in Wales* 50, 54–6.

——2011. 'Abermagwr Romano-British villa, Ceredigion, mid Wales: Interim report on its discovery and excavation', *Archaeologia Cambrensis* 160, 39–49.

Evans, D. R. and Metcalf, V. M., 1992. *Roman Gates Caerleon*, Oxbow Monograph 15 (Oxford).

Evans, J., 1993. 'Function and finewares in the Roman north', *Journal of Roman pottery Studies* 6, 95–118.

——1996. 'The Gas House Lane (AL23) Roman pottery', in S. Cracknell, *Roman Alcester, Volume 2, defences and defended area*, CBA Research Report 106 (London: Council for British Archaeology), 58–96.

——1998a. 'Roman pottery from Plas Coch Wrexham', in Gifford and Partners 1998, 58–88.

——1998b. 'Plas Coch daub' in Gifford and Partners 1998, 100.

——1998c. 'The Roman pottery', in D. Longley, N. Johnstone and J. Evans, 'Excavations on two farms of the Romano-British period at Bryn Eryr and Bush Farm, Gwynedd, *Britannia* 29, 185–246.

Evans, J. and Rátkai, S., 1998. 'The Plas Coch ceramic and stone tile', in Gifford and Partners 1998, 97–9.

Fairnburn, N., 2003. 'Birch Heath, Tarporley: excavation of a rural Romano-British settlement'. *Journal of the Chester Archaeological Society* 77, 58–114.

Gifford and Partners 1998. 'Plas Coch Archaeological Excavations', unpublished report, Gifford and Partners Report No. B0089.2R.

Gillam. J. P., 1976. 'Coarse Fumed Ware in North Britain and beyond', *Glasgow Archaeoogical Journal* 4, 57–80.

Greig, J. R. A., 1991. 'The British Isles', in W. van Zeist, K. Wasylikowa and K.-E. Behre (eds) *Progress in Old World Palaeoethnobotany* (Rotterdam: Balkema), 299–334.

Grenter, S., Jones, N. and Slater, B., 1994. 'Plas Coch, Wrexham', *Archaeology in Wales* 34, 54.

——1995. 'Plas Coch, Wrexham', *Archaeology in Wales* 35, 53.

Grimes, W. F., 1930. *Holt, Denbighshire: the works depôt of the Twentieth Legion at Castle Lyons*, Y Cymmrodor 41.

Hartley, B. R., 1972. 'The Roman occupation of Scotland: the evidence of Samian ware', *Britannia* 3, 1–55.

Hartley, K. F. and Webster, P. V., 1973. 'The Romano-British pottery kilns near Wilderspool', *Archaeological Journal* 30, 77–103.

Hattatt, R., 1985. *Iron Age and Roman Brooches: a Second Selection of Brooches from the Author's Collection* (Oxford).

——1987. *Brooches of Antiquity: a Third Selection of Brooches from the Author's Collection* (Oxford).

——1989. *Ancient Brooches and other Artefacts: a Fourth Selection of Brooches from the Author's Collection* (Oxford).

Hillman, G., 1981. 'Reconstructing crop husbandry practices from charred remains of crops', in R. Mercer (ed.), *Farming Practice in British Prehistory* (Edinburgh: Edinburgh University Press), 123–62.

——1982. 'Evidence for spelting malt', in R. Leech (ed.), *Excavations at Catsgore 1970–1973. A Romano-British Village*, Western Archaeological Trust Monograph 2 (Bristol), 137–41.

Hinchcliffe, J., Williams, J. H. and Williams, F., 1992. *Roman Warrington* (Manchester).

Hull, M. R., 1961. 'Note on a brooch from Hucclecote', in E. M.Clifford, 'The Hucclecote Roman Villa', *Bristol and Gloucestershire Archaeological Society Transactions* 80, 42–9.

Jarrett, M. G. and Wrathmell, S., 1981. *Whitton: An Iron Age and Roman Farmstead in South Glamorgan* (Cardiff: University of Wales Press).

Jones, G. and Milles, A., 1989. 'Iron Age, Romano-British and medieval plant remains', in W. Britnell, 'The Collfryn hillslope enclosure, Llansantffraid Deuddwr, Powys: excavations 1980–1982', *Proceedings of the Prehistoric Society* 55, Microfiche 3–5.

Jones, G. D. B. and Mattingly, D., 1990. *An Atlas of Roman Britain* (Oxford).

Jones, J., 1989. 'Botanical remains', in K. Blockley, *Prestatyn 1984–5. An Iron Age Farmstead and Romano-British Industrial Settlement in North Wales*, British Archaeological Reports, British Series 210 (Oxford), 171–9.

Jones, N. W., 1997. 'Plas Coch, Wrexham: Excavations 1994–5', unpublished report, CPAT Report No. 214.

Kaye, W. J., 1914. *Roman (and other) Triple Vases* (London).

Kenney, J., 2005. 'A Roman T-shaped corn-drier from Tremadog, Gwynedd', *Archaeology in Wales* 45, 25–32.

Ludowici, W., 1927. *Stempel-Namen und Bilder römischer Töpfer Legions-Ziegel-Stempel Formen von Sigillata-und anderen Gefässen aus meinen Ausgrabungen in Rheinzabern, 1901–1914* (München).

Manley, J., 1984. 'A Romano-British brooch from Llysfaen, Clwyd', *Transactions of the Denbighshire Historical Society* 33, 105–6.

Manning, W. H., 1985. *Catalogue of the Romano-British Iron Tools, Fittings and Weapons in the British Museum* (London: British Museum Publications).

——1993. *Report on the Excavations at Usk 1965–1976: The Roman Pottery* (Cardiff: University of Wales Press).

Manning, W. H, Price, J. and Webster, J., 1995. *Report on the Excavations at Usk 1965–76: The Roman Small Finds* (Cardiff: University of Wales Press).

Mason, D. J. P., 1983. Eaton-by-Tarporley: excavations at the Roman villa, 1982', *Cheshire Archaeological Bulletin* 9, 67–73.

Moffett, L. C., 1986. 'Crops and crop processing in a Romano-British village at Tiddington: the evidence from the charred plant remains', Ancient Monuments Laboratory Report 15/86.

Musson, C. R., 1991. *The Breiddin Hillfort: A Later Prehistoric Settlement in the Welsh Marches*, CBA Research Report No. 76 (London: Council for British Archaeology).

Oswald, F., 1936–37. *Index of Figure Types on Terra Sigillata, 'Samian Ware'*, Supplement to Annals of Archaeology and Anthropology (Liverpool; reprinted London 1964).

Parkhouse, J., 1988. 'Note on environmental samples', in D. M. Robinson (ed.), *Biglis, Caldicot and Llandough*, British Archaeological Reports, British Series 188 (Oxford), 64.

Peacock, D. P. S., 1967. 'Romano-British pottery production in the Malvern district of Worcestershire', *Transactions of the Worcestershire Archaeological Society* 1 (1965–67), 15–28.

Pearson, E., 1997. 'Assessment of environmental remains from Plas Coch, Wrexham, Cheshire', unpublished report, County Archaeological Service, Hereford and Worcester County Council Project 1369, Report, 537.

Probert, F., 1997. 'Report on the Burnt Grain', in A. G. Marvell and H. S. Owen-John, *Leucarum: Excavations at the Roman Auxiliary Fort at Loughor, West Glamorgan 1982–84 and 1987–88*, Britannia Monograph Series 12, 125–30.

Mattingly, H. and Sydenham, E. A., 1923–1988. *The Roman Imperial Coinage*, 9 vols (London).

Robertson, A. S., 1970. 'Roman finds from non-Roman sites in Scotland', *Britannia* 1, 198–226.

Rogers, G., 1974. *Poteries sigillées de la Gaule Centrale, I: les motifs non figurés*, Gallia Supplément 28 (Paris).

Rogers, I., 1996. 'Report on an Archaeological Field Evaluation at Plas Coch, Wrexham', unpublished report, Gifford and Partners Report No. 7276:01.2R.

Seaby, H. A., 1980. *Roman Silver Coinage*, 2 vols (London).

Schoch, W. H., Pawlik, B. and Schweingruber, F. H., 1988. *Botanical macro-remains* (Berne and Stuttgart: Paul Haupt).

Snape, M. E., 1987. 'Museum Note 1987', *Archaeologia Aeliana*, 5th ser., 15, 309–12.

——1993. *Roman Brooches from North Britain*, British Archaeological Reports, British Series 235, (Oxford).

Stace, C., 1991. *New Flora of the British Isles* (Cambridge: Cambridge University Press).

Stanfield, J. A., 1935. 'A Samian bowl from Bewcastle, with a note on the potters Casurius and Apolauster', *Transactions of the Cumberland and Westmorland Antiquarian and Archaeological Society*, new ser. 35, 182–205.

Stanfield, J. A. and Simpson, G., 1958. *Central Gaulish Potters* (Oxford: Oxford University Press for University of Durham).

——1990. *Les potiers de la Gaule Centrale*, Revue Archéologiques Sites, Hors-série no. 37, (Gonfaron).

Stanford, S. C., 1982. 'Bromfield, Shropshire – Neolithic, Beaker and Bronze Age sites 1966–79'. *Proceedings of the Prehistoric Society* 48, 279–320.

Thompson, F. H., 1965. *Roman Cheshire* (Chester).

Van der Veen, M., 2008. 'Food as embodied material culture: diversity and change in plant food consumption in Roman Britain', *Journal of Roman Archaeology* 21, 83–109.

Van der Veen, M., Livarda, A. and Hill, A., 2007. 'The archaeobotany of Roman Britain: current state and identification of research priorities', *Britannia* 38, 181–210.

——2008. 'New plant foods in Roman Britain: dispersal and social access', *Environmental Archaeology* 13, 11–36.

Wait, J., 1996. 'Plas Coch, Wrexham', *Archaeology in Wales* 36, 73–4.

——1997. 'Plas Coch, Wrexham', *Archaeology in Wales* 37, 79–80.

Walke, N., 1965. *Das römische Donaukastell Straubing-Sorviodurum*, Limesforschungen 3 (Berlin).

Warrilow, W., Owen, G. and Britnell, W., 1986. 'Eight ring-ditches at Four Crosses, Llandysilio, Powys, 1981–85', *Proceedings of the Prehistoric Society* 52, 53–88.

Webb, A., 1996. 'Plas Coch, Wrexham: Geophysical Survey', unpublished report, West Yorkshire Archaeology Service.

Webster, P. V., 1976. 'Severn Valley Ware: a preliminary study', *Transactions of the Bristol Gloucestershire Archaeological Society* 94, 18–46.

——1977. 'Severn Valley Ware on the Antonine Frontier', in J. Dore and K. Greene (eds), *Roman Pottery Studies in Britain and Beyond*, British Archaeological Reports, Supplementary Series 30 (Oxford), 163–76.

——1982. 'Romano-British coarse pottery in North-West England – an introduction', *Lancashire Archaeological Journal* 2, 13–31.

Wheeler, R. E. M. and Wheeler, T. V., 1932. *Excavation of the Prehistoric, Roman and Post-Roman Site at Lydney, Gloucestershire* (London: Society of Antiquaries of London).

Veen, M. van der, 1989. 'Charred grain assemblages from Roman-period corn driers in Britain', *Archaeological Journal* 146, 302–19.

——1992. *Crop Husbandry Regimes*, Sheffield Archaeological Monographs 3 (Sheffield).

Published with the aid of a grant from Cadw, Welsh Government