All together better

Outward Opening / Inward Glazed - Vertical Section

Standard Sash Casement Double Glazed

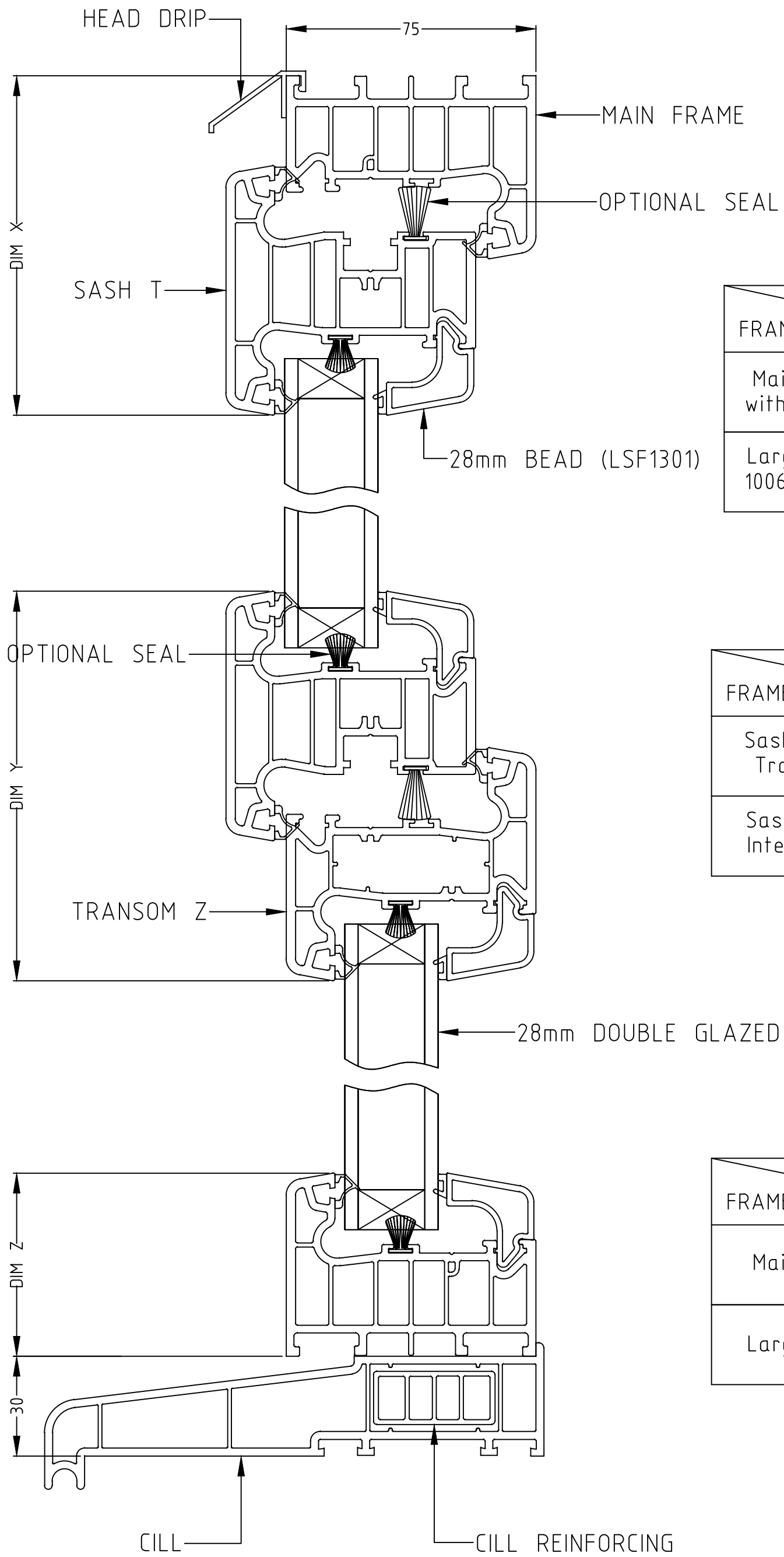

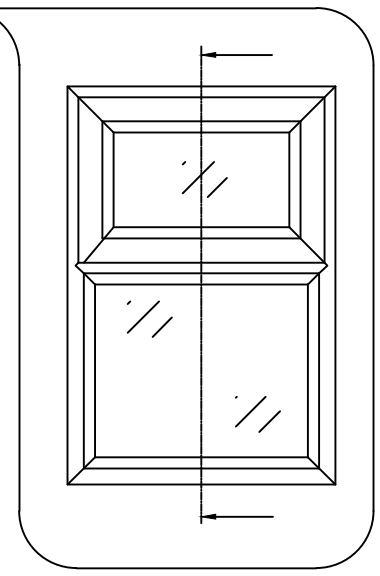

DIMENSION 'X'

FRAME \ DIMENSION	DIM X
Main Frame (LSF 1021) with Sash T (LSF 1005)	102mm
Large Main Frame (LSF 1006) with Sash T (LSF 1005)	117mm

DIMENSION 'Y'

FRAME \ DIMENSION	DIM Y
Sash T (LSF 1005) with Transom Z (LSF 1003)	117mm
Sash T (LSF 1005) with Intermediate Transom Z (LSF 1023)	132mm

DIMENSION 'Z'

FRAME \ DIMENSION	DIM Z
Main Frame (LSF 1021)	55mm
Large Main Frame (LSF 1006)	70mm