Five Fords WwTW Access Road Improvements

Arboricultural Report

August 2015

Dŵr Cymru Welsh Water

Dŵr Cymru Welsh Water

MMB
Mott MacDonald Bentley

Five Fords WwTW Access Road Improvements

Arboricultural Report

August 2015

Dŵr Cymru Welsh Water

DCWW-4791-S-201-MMB-06-RP-N-19005

Mott MacDonald Bentley, Fitzalan House, Fitzalan Road, Cardiff CF24 0EL, United Kingdom
Tŷ Fitzalan, Heol Fitzalan, Caerdydd CF24 0EL, Y Deyrnas Unedig
T +44 (0)29 2046 7800 **F** +44 (0)29 2047 1888 **W** www.jnbentley-mmb.co.uk

Issue and revision record

Revision	Date	Originator	Checker	Approver	Description
P01	19/05/2015	James Sothcott	Rhys Lennon	Charles Peeler	Superseded
P02	10/08/2015	James Sothcott	Charles Peeler	Kim Hampton	Amendments to Table 4.1 and Drawings in Appendix A to include tree 22 with those requiring removal.

Information class: Standard

This document is issued for the party which commissioned it and for specific purposes connected with the above-captioned project only. It should not be relied upon by any other party or used for any other purpose.

We accept no responsibility for the consequences of this document being relied upon by any other party, or being used for any other purpose, or containing any error or omission which is due to an error or omission in data supplied to us by other parties.

This document contains confidential information and proprietary intellectual property. It should not be shown to other parties without consent from us and from the party which commissioned it.

Contents

Executive Summary i

1 Introduction 1
1.1 Terms of Reference 1
1.2 Scope of Work and Tree Assessment Methodology 1
1.3 Limitations of the Survey 3

2 Tree Summary 4
2.1 Overview 4
2.2 Summary of Tree Retention Categories 4
2.3 Site Photos 5

3 Implications of Proposal 8
3.1 Tree Protection Orders (TPO) and Conservation Areas (CA) 8
3.2 Protection of Root Protection Area 8
3.3 Risk to Trees from General Works Activities 8
3.4 Protective Barriers: General 9
3.5 Precautions in Respect of Temporary Works 10
3.6 Sequence of Activities 10
3.7 Arboricultural Inspection 10
3.8 Environmental Law 10
3.9 Services 11

4 Recommendations 12
4.1 Proposed Actions for Individual Trees 12
4.2 Tree Removal 13
4.3 Tree Pruning 13
4.4 Barrier Protection 13

5 Conclusions 14

Appendices 15
Appendix A. Drawings 16
A.1 Tree Constraints Plan 16
A.2 Tree Protection Plan 16
Appendix B. Key to Tree Survey Schedule 17
Appendix C. Tree Survey Schedule 18
Appendix D. Root Protection Area Calculations 22
Appendix E. Temporary Protective Fencing and Ground Protection 23
E.1 Extract from BS5837:2012: Default Specification for Protective Barrier 23

E.2 Extract from BS5837:2012: Examples of above ground stabilizing systems 24
E.3 Extract from BS5837:2012 Ground Protection during Demolition and Construction 25
Appendix F. Glossary 26
Appendix G. References 27

Executive Summary

Mott MacDonald Bentley has been commissioned by Dŵr Cymru Welsh Water to carry out an arboricultural survey for the modification of an existing access road to the Five Fords Wastewater Treatment Works (WwTW), Cefn Road, near Wrexham, Wales, LL13 0PA.

The survey and associated report has been undertaken in accordance with *BS 5837:2012 Trees in relation to design, demolition and construction - Recommendations*, which is intended to assist decision making with regard to existing and proposed trees in the context of design, demolition and construction. This report will also assess the potential impact that the scheme may have on the surveyed trees and includes a method statement for working close to trees to be retained.

This survey is not, nor should be taken to be, a full or thorough assessment of the health and safety of trees on or adjacent to the site, and therefore it is recommended that detailed tree inspections are undertaken on a regular basis with the express purpose of complying with the land owner's duty of care and satisfying health and safety requirements.

There were 25 individual trees, 2 groups and 3 hedgerows within the area surveyed for the proposed works. The following categories were assigned:

- Category A i.e. trees of high quality; 1 trees
- Category B i.e. trees of moderate quality; 10 tree, 2 groups and 2 hedgerow
- Category C i.e. trees of low quality; 13 trees and 1 hedgerow
- Category U i.e. trees for removal; 1 trees

The majority of trees surveyed form part of the wooded border to the south of Cefn Road. The remaining trees and hedges flank the sides of the access road leading to the main site of Five Fords WwTW.

To enable the scheme to progress six individual trees and two hedgerows have been recommended for removal. Of these five individual trees and two hedgerows have been assessed as category B (trees of moderate retention value) and one individual tree has been assessed as category C (trees of low retention value). Their removal will not impact greatly on the landscape or arboricultural value of the area and is essential for construction of the new bridge crossing the River Clywedog. A small amount of remedial pruning may also be necessary to tree

group G2 to maintain visibility for traffic using the access road entrance at Cefn Road.

1 Introduction

1.1 Terms of Reference

Dŵr Cymru Welsh Water (DCWW) is applying to Wrexham County Borough Council for approval for the widening of an existing access road at Five Fords WwTW, Cefn Road, near Wrexham, Wales. This would require the widening of an existing road and replacement of the existing bridge. A new junction with Cefn Road will be created providing appropriate visibility splays to the east and west of the access road entrance.

Mott MacDonald Bentley was commissioned by DCWW to undertake an Arboricultural Survey to identify the tree constraints associated with this proposal which are reported here. The report also highlights the trees designated for removal prior to construction works and trees that require barrier protection during the proposed works. An Arboricultural Method Statement is incorporated into the report, stating the sequence of activities on site and methods of protecting and working adjacent to retained trees to ensure all retained trees remain in good health, during and after construction works.

1.2 Scope of Work and Tree Assessment Methodology

The tree survey was carried out by a qualified Mott MacDonald Arboriculturalist on 25th February 2015 to assess the quality and value of the principal trees within or adjacent to the footprint of the proposed access improvements.

The survey was undertaken in accordance with the guidelines set out in '*BS 5837:2012 Trees in relation to design, demolition and construction - Recommendations'*. The tree data contained within the Tree Survey Schedule (Appendix C) were recorded by visual survey from ground level and no invasive tree inspection measures were employed.

The survey process categorises the trees on site, selects those appropriate for retention, reviews the options for incorporating these trees within the developed landscape and provides a finalised methodology for tree protection during construction. The survey provides comment on the general quality of the trees but does not constitute a full or thorough assessment of the health and safety of trees on or adjacent to the site.

The full Tree Survey Schedule and categorisation of the trees in their existing context is stated in Appendix C. The Root Protection Area (RPA) calculations are provided in Appendix D.

In accordance with BS 5837:2012, the following information was recorded for each tree:

- Sequential reference number (to be recorded on the tree constraints plan).
- Species listed by common name, with key provided to scientific name.
- Life stage (Table 1.1).

Table 1.1: Life stage categories

Abbreviation	Life Stage	Description
Y	Young	Trees aged less than 1st quarter of their life expectancy
SM	Semi Mature	Trees within 2nd quarter of their life expectancy
EM	Early mature	Trees within 3rd quarter of their life expectancy
M	Mature	Trees aged within final quarter of their life expectancy
OM	Over Mature	Over-mature - declining or moribund trees of low vigour
V	Veteran	Specimens exhibiting features of biological, cultural or aesthetic value that are characteristic of, but not exclusive to, individuals surviving beyond the typical age range for the species concerned

- Height (metres).
- Crown spread (metres), taken as a minimum at the four cardinal points, to derive an accurate representation of the crown (plotted on the tree constraints plans).
- Existing height (metres) above ground level of:
  - First significant branch; and,
  - Canopy.
- Stem diameter (millimetres) in accordance with Annex C of BS 5837:2012. The stem diameters of single stemmed trees were measured at 1.5 metres above ground level and multi-stemmed trees measured in accordance with Annex C.
- The Root Protection Area (RPA), calculated in accordance with Section 4.6 of BS 5837:2012. The two measurements provided are a 'Root Protection Radius (m)' (circle centred on the base of the stem) and an overall 'root protection area (m^2)'.
- General observations, particularly of structural and/or physiological condition (e.g. the presence of any decay and physical defect), and/or preliminary management recommendations.
- Estimated remaining contribution, in years (<10, 10 +, 20+, 40+).
- Retention category recorded as A, B, C or U in accordance with Section 4.5 and Table 1 and Table 2 of BS 5837:2012 to be recorded on the tree survey plan (Appendix B). This gives an indication as to each tree's arboricultural, landscape and cultural value and significance as well as its' suitability for retention in the context of the proposed redevelopment of the site. The sub-categories [1 - Arboricultural values; 2 - Landscape values and 3 - Cultural values, including conservation] are included where considered necessary to clarify why a tree has been assigned to a particular retention category. These categorisation criteria are summarised in Table 2.1 below:

Table 1.2: Retention Categories

Category	Description
Category A	Trees of high quality and value whose retention is most desirable (suggested minimum contribution 40 years)
Category B	Trees of moderate quality and value whose retention is desirable if practicable (suggested minimum contribution 20 years)
Category C	Trees of low quality and value or limited long-term potential, which could be retained if not in conflict with development proposals or young trees with a stem diameter of less than 150 mm (suggested minimum contribution 10 years)

Category	Description
Category U	Trees requiring removal irrespective of any development proposals due to significant structural defects, irreversible decline or with a very short-term life expectancy of less than 10 years

1.3 Limitations of the Survey

The survey was undertaken utilising the design highlighted within drawing MMD-329011-C-DR-00-ARB-0001 (see Appendix A). The trees identified on this plan are within the scheme extents that may be affected by the proposals.

This report is not, nor should be taken to be, a full or thorough assessment of the health and safety of trees on or adjacent to the site. It is recommended that a full tree survey should be undertaken on a regular basis to satisfy health and safety requirements. Previous management and/or surveys in relation to the health and safety of trees on this site have not been taken into account as part of this report.

2 Tree Summary

2.1 Overview

There were 25 individual trees, 2 groups of trees and 3 hedgerows within the area surveyed at the Five Fords WwTW access road.

The majority of trees are located within the wooded southern border of Cefn Road to the east of the access road entrance. The remaining trees and hedges flank the access road between Cefn Road and the main WwTW entrance.

The tree groups (G1 and G2) and the individual trees bordering Cefn Road are mainly mixed native species including: alder (*Alnus glutinosa*), willow (*Salix fragilis*), ash (*Fraxinus excelsior*), sycamore (*Acer pseudoplatanus*) and wych elm (*Ulnus glabra*). The individual trees recorded are taller, early mature specimens that are more prominent in the landscape whilst groups G1 and G2 refer to an understory of smaller, younger shrub like trees. These two groups have value as a screen between the road and the fields to the south. All of these trees (barring a category U tree stump) have been rated as category B (trees of moderate quality) and C (trees of low quality).

Several trees grow from the banks of the River Clywedog including two mature sycamore trees on the southern bank beside the existing bridge used to gain access to the WwTW. Also, on the opposite side of the access bridge on the north bank, a row of early mature alder are present, on private third party land. These trees are all category B.

The access road runs south from Cefn Road and then turns west towards the WwTW. Along its length lie two hedges (H2 and H3), one of which (H2) is predominantly hawthorn whilst the other (H3) is a mixed native combination of species. Both hedges are category B and form an aesthetically pleasing border to the access road.

The only Category A tree recorded on site was a large mature common oak (*Quercus* robur) tree that is situated to the east of the access road. This tree has a large Root Protection Area (RPA) of approximately 15m radius and should be avoided if possible

2.2 Summary of Tree Retention Categories

Of the 25 individual trees, 2 groups and 3 hedgerows in the area surveyed, the following provides a summary of their quality and value as assessed in accordance with BS 5837:2012.

Tree Category	Description	Total Number surveyed
Category A	Trees or groups of high quality and value	1 individual tree
Category B	Trees or groups of moderate quality and value	10 individual tree, 1 tree group and 2 hedgerow
Category C	Trees or groups of low quality and value	13 individual trees and 1 hedgerow
Category U	Trees or groups for removal due arboricultural reasons	1 individual tree / stump

2.3 Site Photos

Photo 2:1: View east along Cefn Road from site entrance

Source: Mott MacDonald Photo 25/02/2015

Photo 2:2: Group G1 and River Clywedog visible on right hand side of photo

Source: Mott MacDonald Photo 25/02/2015

Photo 2:3 Two mature sycamore and alder trees growing from the banks of the River Clywedog

Source: Mott MacDonald Photo 25/02/2015

Photo 2:4 Access bridge over the River Clywedog

Source: Mott MacDonald Photo 25/02/2015

Photo 2:5 View north west from access road towards Five Fords WwTW

Source: Mott MacDonald Photo 25/02/2015

3 Implications of Proposal

3.1 Tree Protection Orders (TPO) and Conservation Areas (CA)

The primary measures which provide statutory protection to trees are Tree Preservation Orders (TPOs) and Conservation Area (CA) status. Where present, these measures determine that either consent from the Local Planning Authority (LPA) for TPO designations or notification to the LPA for CA designations are required for any works that may affect trees or tree groups.

A desk study using the Wrexham County Borough Council interactive map website has confirmed that the extent of the proposed works do not fall within a Conservation Area and no trees in the vicinity are covered by a Tree Preservation Order.

3.2 Protection of Root Protection Area

Working anywhere in the vicinity of trees is likely to cause some root damage due to the fact that approximately 80% of the root system of any tree will be within the upper 600mm of the soil profile. Roots will spread out for a considerable distance from a tree and may be encountered at a distance beyond the canopy spread of a tree. Where construction activities are proposed within the rooting zone of trees, the potential for significant damage exists.

Table 2 of BS 5837:2012 prescribes a methodology for the calculation of a root protection area (RPA) which represents the minimum area that should be retained undisturbed around a tree or trees for the avoidance of an unacceptable degree of root disturbance. The required RPA of a tree is calculated, and typically plotted as a circle (or where appropriate as a square of equivalent area) to determine constraints or the location of protective fencing. In certain circumstances the actual shape of this area may then be adjusted to take account of local topography or any existing site features that may serve as restrictions to 'normal' root development.

The RPA calculations are stated within Table D.1, Appendix D.

3.3 Risk to Trees from General Works Activities

Trees can be easily damaged by site works, with both the tree roots and the main structure of a tree susceptible to a range of impacts. Root damage can affect the anchorage and stability of the tree, as well as preventing or inhibiting the absorption of water and nutrients. Damage to the trunk and branches leaves the tree more exposed to disease and decay.

Any activities required as part of the proposed works that could affect the existing trees as described below, must be discussed and approved by a qualified arboriculturalist prior to commencement:

Activities that can cause damage to tree roots include:

- Trenches;
- Alterations in soil level;
- Placement of non-porous surfaces;

- Compaction of soil;
- Changes in soil hydrology;
- Root exposure;
- Soil pollution (i.e. oil spill, incorrect application of herbicide and/or other chemicals); and,
- Fires.

Activities that can cause damage to tree trunks and branches include:

- Pressure from materials stored against trunks;
- Physical impact from plant and equipment;
- Incorrect pruning;
- Exposure of bark or leaves to chemicals; and,
- Damage to bark from mowers and strimmers.

3.4 Protective Barriers: General

Access into the RPA should not be required during the works. Protective fences must ideally be constructed in accordance with BS 5837:2012 and be fit for the purpose of excluding any construction activity (refer to Appendix E). Any other fence/barrier used must be approved by the arboriculturalist prior to installation.

Weather resistant notices should be erected on the barrier with words such as:

“Tree Protection Area — Keep out”.

The following prohibitions shall apply within the area enclosed by the Tree Protection Barriers:

- No mechanical digging or scraping;
- No storage of plant, equipment or materials;
- No vehicular or plant access;
- No fire lighting within 10m of tree canopies;
- No handling, discharge or spillage of any chemical substance, including cement washings and vehicle washings within 10m;
- No action likely to cause localised water-logging;
- No alteration of ground levels;
- No construction of hard surfaces;
- No attachment of boards, hoarding, cables or notices or fencing to trees; and,
- No storage of excavated materials.

Special care is to be taken on sloping ground where spillages could run towards the trees. A collecting channel dug along the outer line of the protective fencing would be one method of avoiding such damage.

If excavators are to be used during construction, at no time is the excavating arm to encroach over the position of the tree protection barriers.

3.5 Precautions in Respect of Temporary Works

If temporary access is required to a RPA then access may only be gained after consultation with the arboriculturalist and Local Planning Authority and following placement of materials such as concrete slabs, scaffold boards or geo-textile fabrics that will spread the weight of any load and prevent compaction of the soil.

3.6 Sequence of Activities

To ensure adequate protection for the trees the following order of activities will be followed:

- Undertake any tree surgery works (subject to such ownership and Local Planning Authority consents as may be appropriate);
- Erect tree protective fencing in accordance with attached plans and specifications;
- Inform Local Planning Authority Tree Officer that tree protective fence has been erected;
- Brief all site operatives, visitors and sub-contractors on the presence of tree protective fencing and the need to ensure that all operations remain wholly outside the protected areas as part of site induction procedures;
- Main site operations – construction phase; and,
- Removal of temporary protective fencing (once all site operations have ceased).

During the main site operations the following rules must be adhered to:

- Retain and maintain tree protective fencing as erected during the full duration of the construction building works;
- No works to take place on the “tree side” of the fence;
- Tree roots extending beyond the protective fencing exposed by excavation works are to be pruned properly using secateurs or a sharp saw;
- Exposed roots shall be covered by moist hessian until they are reburied using a good quality top soil or a top soil and sharp sand mix; and,
- No signs, notices, cables or other objects shall be fixed to any part of a retained tree.

3.7 Arboricultural Inspection

On completion of the development, an arboriculturalist must look for signs of intolerance to the change in conditions and/or any accidental damage to retained trees to identify the need for additional tree works to those originally specified at the beginning of the project.

3.8 Environmental Law

It should be noted that the Contractor will be responsible under the Wildlife and Countryside Act 1981 (as amended), and the Conservation of Habitat Regulations 2010 (as amended), and the Countryside Rights of Way Act 2000, to take all reasonable action to identify the presence of protected species including

nesting birds, bats, dormice, amphibians and reptiles in the works area/surroundings, and comply fully with the law in relation to impacts associated with any instructed works.

3.9 Services

The installation of any services or ducting within the RPA of retained trees should be carried out following the guidelines in The National Joint Utilities Group, Issue 2 – 16 November 2007, Volume 4 – Guidelines for the Planning, Installation and Maintenance of Utility Apparatus in Proximity to Trees.

4 Recommendations

The construction works at this site must be undertaken in accordance with Tree Protection Plan MMD-329011-C-DR-00-ARB-0002 (see Appendix A.2) and the guidance detailed below.

4.1 Proposed Actions for Individual Trees

The following sections detail specific recommended actions for trees affected by this Scheme, identifies trees requiring removal, barrier protection or pruning works prior to and during the proposed works.

Table 4.1: Summary of recommendation actions in relation to tree in the northern extent of the scheme area

Tree Ref	Species	TPO	CA	Retention Category	Recommended Actions
1	Common Alder	No	No	B	Remove due to direct conflict with new vehicle bridge.
2	Crack Willow	No	No	C	Remove due to direct conflict with new vehicle bridge..
3	Crack Willow	No	No	C	No action.
4	Crack Willow	No	No	C	No action.
5	Stump	No	No	U	No action.
6	Common Ash	No	No	B	No action.
7	Common Alder	No	No	C	No action.
8	Sycamore	No	No	C	No action.
9	Common Alder	No	No	C	No action.
10	Common Ash	No	No	C	No action.
11	Poplar	No	No	C	No action.
12	Sycamore	No	No	B	No action.
13	Sycamore	No	No	B	Remove due to direct conflict with new vehicle bridge.
14	Sycamore	No	No	B	Remove due to direct conflict with new vehicle bridge.
15	Sycamore	No	No	C	No action.
16	Common Alder	No	No	C	No action.
17	Leyland Cypress	No	No	C	No action.
18	Common Alder	No	No	B	No action.
19	Common Alder	No	No	B	No action.
20	Common Hawthorn	No	No	B	Remove due to direct conflict with access road widening.
21	Leyland Cypress	No	No	C	Protect with Barrier Protection to BS5837:2012.
22	Sycamore	No	No	B	Remove due to direct conflict with access road widening.
23	Common Oak	No	No	A	Protect with Barrier Protection to BS5837:2012.
24	Cherry Laurel	No	No	B	Protect with Barrier Protection to BS5837:2012.
25	Leyland Cypress	No	No	C	Protect with Barrier Protection to BS5837:2012.
G1	Mixed Native	No	No	B	No action.
G2	Mixed Native	No	No	B	Pruning for visibility to be carried out in accordance with BS3998:2010
H1	Leylandii	No	No	C	No action.
H2	Hawthorn	No	No	B	Remove due to direct conflict with access road widening.
H3	Mixed Native	No	No	B	Remove due to direct conflict with access road widening.

4.2 Tree Removal

Five individual trees and two hedgerows require removal because they are in either direct conflict with the new bridge or road widening. Of these, four individual trees and two hedgerows have been assessed as Category B (trees of moderate retention value) and 1 individual tree has been assessed as Category C (trees of low retention value).

4.3 Tree Pruning

Group G2 may require formative pruning to ensure visibility is maintained at the mouth of the access road. This is essential for the safety of drivers pulling in and out of the access road and for users of Cefn Road. This work must be carried out in accordance with BS3998:2010.

4.4 Barrier Protection

Trees 3, 4, 21, 23 and 25 will require barrier protection in accordance with BS5837:2012 during the construction work. This is to ensure the works do not infringe on the RPAs of these trees. Tree 23 should be afforded particular care as it is the only tree assessed as Category A (trees of high retention value) on site. It should be noted that the RPA of tree 23 will be infringed upon by the works. This infringement has been deemed acceptable as only approximately 5% of the RPA's total area will be affected. However, it should be noted that site supervision by an arboriculturalist will be required at the start of excavations to ensure barrier protection is installed correctly and to ensure that root severance is kept to a minimum.

5 Conclusions

There were 25 individual trees, 2 groups and 3 hedgerow within the area surveyed for the proposed works.

Of the trees surveyed, one tree was awarded a retention category A (trees of high quality). There were 10 individual trees, 2 groups and 2 hedgerows recorded as category B (trees of moderate quality), and there were 13 individual trees and 1 hedgerow assessed as category C (low quality). One tree/stump on the north bank of the River Clywedog was assessed as category U (i.e. for removal on arboricultural grounds).

The majority of trees are located along the southern edge of Cefn Road and form a wooded boundary between it and the River Clywedog/fields beyond. The remaining trees and hedges are located on either side of the access road and beside the existing bridge. The majority of trees are semi mature to early mature category B and C trees. Groups G1, G2 and the trees within them act as an important visual screen between the road and the surrounding countryside. To allow the access road to be widened and a larger bridge to be installed a number of trees will need to be removed. The visibility splay when turning in and out of the access road on Cefn Road is fairly restricted and one tree will require localised pruning to increase visibility.

In total, six trees (1, 2, 13, 14, 20 and 22) and two hedges (H2 and H3) will need to be removed in order to facilitate this scheme. Of these, one individual tree has been assessed as category C (2) and the remaining five trees (1, 13, 14, 20 and 22) and the two hedges have been assessed as category B. Their removal will not greatly decrease the arboricultural or landscape value of the area.

Temporary barrier protection in accordance with BS5837 has been prescribed for trees 3, 4, 23, 24 and 25. This is due to their visual prominence, the high retention value (category A) of tree 23 and the proximity to the proposed road widening.

On completion of the development, an arboriculturalist should inspect the retained trees to identify any:

- signs of intolerance to the change in conditions and/or the effect of the development; and,
- accidental damage that may have occurred during construction.

Following this inspection a tree work specification may be required for remedial works necessary to address any issues identified.

Appendices

Appendix A. Drawings 16
Appendix B. Key to Tree Survey Schedule 17
Appendix C. Tree Survey Schedule 18
Appendix D. Root Protection Area Calculations 22
Appendix E. Temporary Protective Fencing and Ground Protection 23
Appendix F. Glossary 26
Appendix G. References 27

Appendix A. Drawings

A.1 Tree Constraints Plan

A.2 Tree Protection Plan

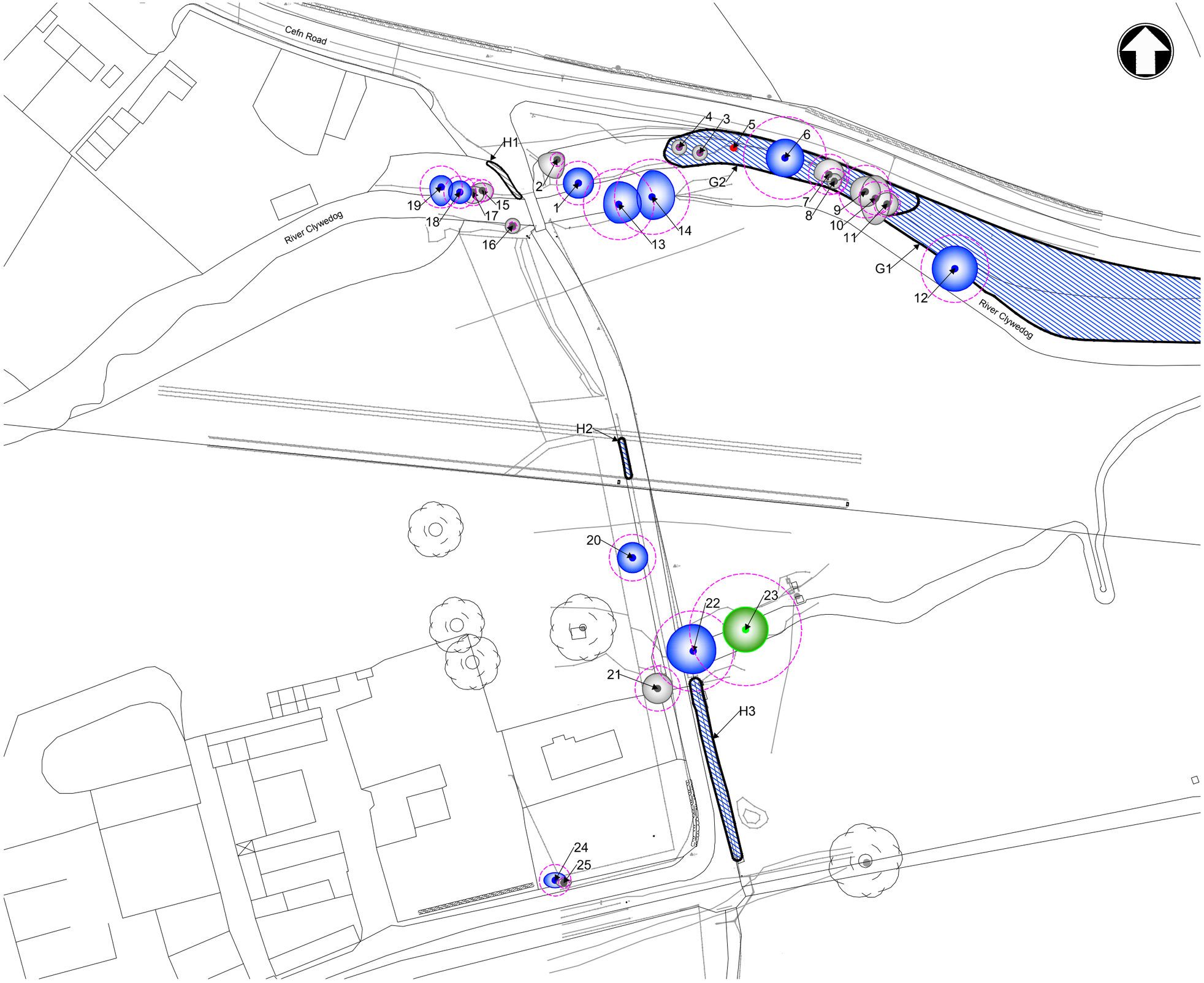

Plan
1 : 500

1:500 0 25m 50m

© Mott MacDonald Limited

This document is issued for the party which commissioned it and for specific purposes connected with the captioned project only. It should not be relied upon by any other party or used for any other purpose.
We accept no responsibility for the consequences of this document being relied upon by any other party, or being used for any other purpose, or containing any error or omission which is due to an error or omission in data supplied to us by other parties.

P:\Southampton\HWA\General\700 Environment\Arboriculture\Projects\Five Fords\Acad\MMD-329011NN26-C-DR-00-XX-0001.dwg Aug 10, 2015 - 10:51AM lee24793

Notes

1. All dimensions are in millimetres unless otherwise stated.
2. Do not scale any items or information from this drawing.
3. To be read inaccordance with Five Fords Arboricultural Survey Report (May 2015) ref:329011/NN25/HWY/HDS/001/A.

Key to symbols

12 Tree Reference

Approximate extent of canopy

Tree Root Protection Area (RPA)

Individual Trees

- Ungraded
- Grade A Trees
- Grade B Trees
- Grade C Trees
- Grade U Trees to be removed for reasons of sound arboricultural management

Tree Groups

- Grade A Trees
- Grade B Trees
- Grade C Trees

Reference drawings

Rev	Date	Drawn	Description	Ch'k'd	App'd
P2	10.08.15	DL	Trees revised	CP	KH
P1	21.05.15	DL	First Issue	RL	CP

Mott MacDonald

Fitzalan House
Fitzalan Road
Cardiff, CF24 0EL
United Kingdom
T +44 (0)29 2046 7800
F +44 (0)29 2046 7801
W www.mottmac.com

Client

Welsh Water

Title

Five Fords WwTW
Proposed Access Road

Tree Constraints Plan

Designed	J Sothcott	JS	Eng check		
Drawn	D Lee	DL	Coordination	J Sothcott	JS
Dwg check	R Lennon	RL	Approved	C Peeler	CP

Scale at A1	Status	Rev
1:500	PRE	P2

Drawing Number
MMD-329011-C-DR-00-ARB-0001

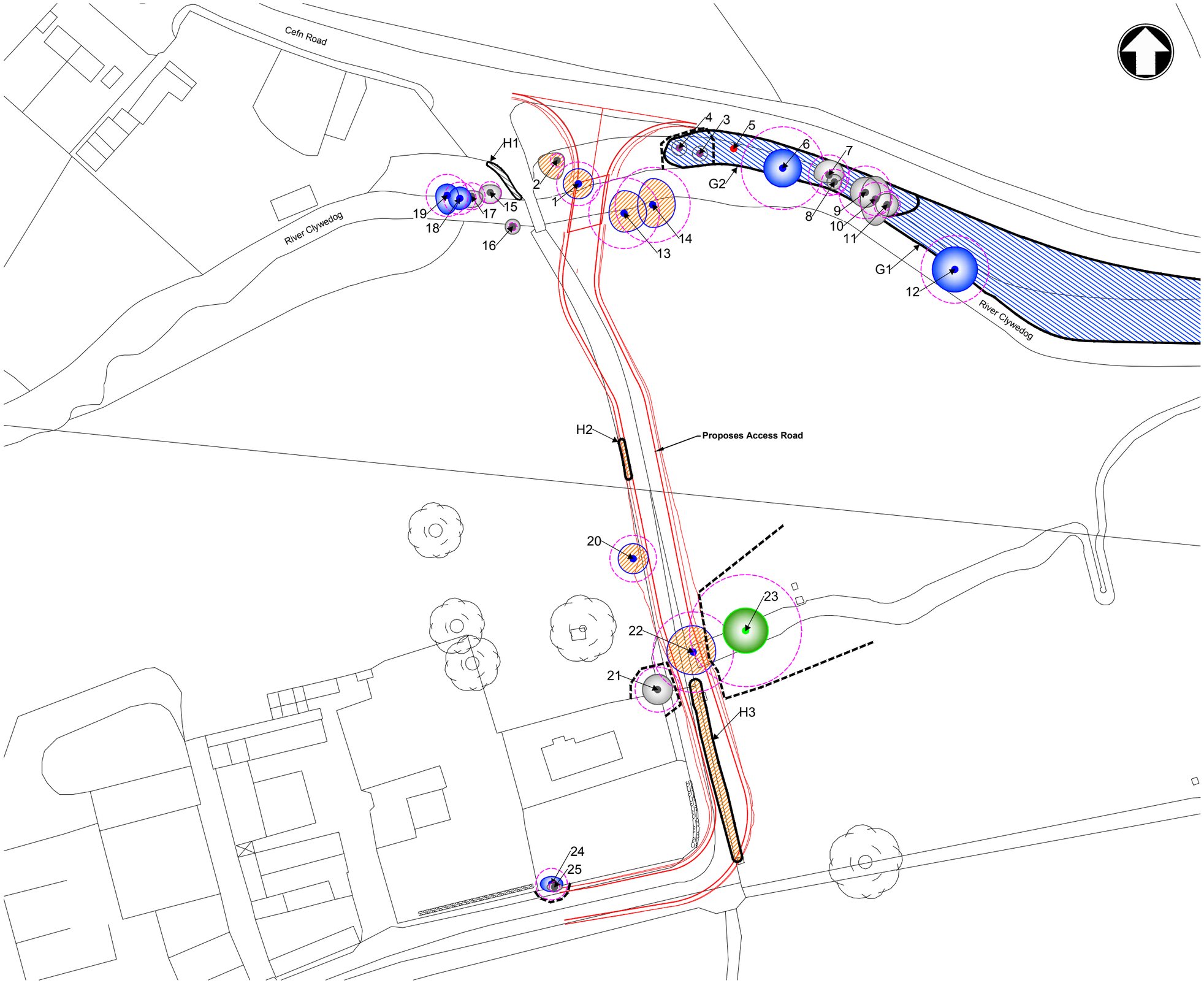

Plan
1 : 500

1:500 0 25m 50m

© Mott MacDonald Limited

This document is issued for the party which commissioned it and for specific purposes connected with the captioned project only. It should not be relied upon by any other party or used for any other purpose.
We accept no responsibility for the consequences of this document being relied upon by any other party, or being used for any other purpose, or containing any error or omission which is due to an error or omission in data supplied to us by other parties.

P:\Southampton\HWA\General\700 Environment\Arboriculture\Projects\Five Fords\Acad\MMD-329011NN26-C-DR-00-XX-0002.dwg Aug 10, 2015 - 10:52AM lee24793

Notes

1. All dimensions are in millimetres unless otherwise stated.
2. Do not scale any items or information from this drawing.
3. To be read inaccordance with Five Fords Arboricultural Survey Report (May 2015) ref:329011/NN25/HWY/HDS/001/A.

Key to symbols

12 Tree Reference

Approximate extent of canopy

Tree Root Protection Area (RPA)

Tree to be removed

Tree Protection Fence

Individual Trees

Ungraded

Grade A Trees

Grade B Trees

Grade C Trees

Grade U Trees to be removed for reasons of sound arboricultural management

Tree Groups

Grade A Trees

Grade B Trees

Grade C Trees

Reference drawings

Rev	Date	Drawn	Description	Ch'k'd	App'd
P2	10.08.15	DL	Trees and fencing revised	CP	KH
P1	21.05.15	DL	First Issue	RL	CP

Mott MacDonald

Fitzalan House
Fitzalan Road
Cardiff, CF24 0EL
United Kingdom
T +44 (0)29 2046 7800
F +44 (0)29 2046 7801
W www.mottmac.com

Client

Welsh Water

Title

Five Fords WwTW
Proposed Access Road

Tree Protection Plan

Designed	J Sothcott	JS	Eng check		
Drawn	D Lee	DL	Coordination	J Sothcott	JS
Dwg check	R Lennon	RL	Approved	C Peeler	CP

Scale at A1: 1:500
Status: PRE
Rev: P2

Drawing Number
MMD-329011-C-DR-00-ARB-0002

Appendix B. Key to Tree Survey Schedule

Key to Tree Survey Schedule		
Tree Reference	Unique reference or Tree Tag number, identifying each tree and/or tree group on the accompanying plan/s.	
Species	Tree species giving the vernacular and full botanic name.	
Height	Recorded in metres, measured in m from the base of the tree.	
Stem Diameter	Tree trunk diameter measured at 1.5m above ground level (on sloping ground above highest ground level) or immediately above root flare for multi-stemmed trees. Expressed in millimetres. (est) dimension estimated; (av) average or max maximum dimension used in groups.	
Branch Spread	Tree canopy extent taken from centre of tree trunk to edge of general canopy line along the four principal points of the compass (note this distance is to the general canopy line in certain cases and that an exceptional or etiolated branch may extend beyond stated figure).	
Crown Clearance	Existing height above ground level of 1) first significant branch and direction of growth (e.g. 2.4 N); and 2) canopy, to inform on ground clearance, crown/stem ratio and shading. Measured in m (rounded up to nearest half metre for dimensions up to 10m and up to nearest metre fordimensions over 10m.	
Life Stage	Estimated life expectancy assessed in accordance with figures provided in Arboricultural Association Leaflet No. 4 tree Management. Note: these age classes may be pre-fixed with 'Early' or 'Late' in the Tree Survey Schedule to provide a more accurate indication of age.	
	Y	Young:within first quarter of normal life expectancy.
	SM	Semi Mature: within second quarter of normal life expectancy.
	EM	Early Mature: within third quarter of normal life expectancy.
	M	Mature: within final quarter of normal life expectancy.
	OM	Over Mature: senescent trees nearing end of their anticipated life expectancy.
	V	Veteran: exhibiting features of biological, cultural or aesthetic value characteristic of individuals surviving beyond typical age range
	D	Dead.
General Observations	Observations particularly of structural and/or physiological condition (e.g. the presence of any decay and physical defect), and/or preliminary management recommendations.	
Estimated Remaining Contribution	Relates to the potential life expectancy of the tree in its current setting, shown in years as one of the following categories: <10; 10+; 20+; and, 40+.	
Category Grading in accordance with Table 1 (BS 5837:2012)	Tree categorisation as defined by Table 1 – Cascade chart for tree quality assessment of British Standard 5837:2005. Decisions regarding which trees are to be retained should be influenced by their retention categories as suggested below.	
	A	Trees of high quality and value; > 40 years contribution remaining; marked light green on plan. Category is sub-divided as follows: 1 particularly good example; essential component of group e.g. in avenues; 2 screening value, particular visual importance 3 significant conservation, historical, commemorative or other value (includes veteran or wood pasture trees). **Tree retention is highly desirable**: s**ignificant amendments to any proposed development should be considered before removing these trees**
	B	Trees of moderate quality and value with a significant life expectancy; > 20 years contribution remaining; marked mid-blue on plan. Category sub-divided as follows: **1** Trees that may be of impaired condition in relation to trees in category above; **2** Trees present in numbers/groups attracting higher collective rating; internal to site, of limited visual impact to locality; **3** Trees with clear conservation or cultural benefits. **Tree retention is desirable: amendments to any proposed development should be considered before removing these trees.**
	C	Trees of low quality and value; >10 years contribution remaining; marked grey on plan. Includes young trees below 150mm diameter (to which consideration for transplanting should be given). Note that “C” trees will usually not be retained where they would impose a significant constraint on development. Category sub-divided as follows: **1** Trees not qualifying in higher categories; **2** Trees within groups of low landscape value, having limited screening value; **3** Trees with very limited conservation or other cultural benefits. **Trees could be retained however the removal of some of these trees should be considered acceptable if required to facilitate any proposed development.**
	U	Trees for removal; those in such a condition that are dead, dying, dangerous, severely suppressed or where any existing value would be lost within 10 years; marked dark red on plan. **These trees should be removed or treated in such a way as to make them safe where they have high ecological value or benefits.**

Appendix C. Tree Survey Schedule

Table C.1: Tree Survey Schedule

Tag Number	Tree Type	Life Stage	Height (m)	Crown Spread (m)				Crown Height					No of Stems	Stem Diameter (mm)	Root Protection Area (RPA)		Condition				BS5837 Category		Useful remaining contribution (years)	Comment
				N	E	S	W	Height + direction 1st significant branch (m)	N	E	S	W			RPA Radius (M)	RPA (m2)	Crown	Stem	Basal Area	General Physical	Category	Sub Category		
1	Common Alder	Early mature	16	4	4	4	4	1	1	1	1	1	1	410	5.8	104.2	Fair	Fair	Fair	Fair	B	2;1	10+	Riverbank tree, ivy stem,
2	Crack Willow	Semi mature	6	2	2	5	5	1	1	1	1	1	1	420	1.8	10.2	Fair	Fair	Fair	Fair	C	1;2	20+	Growing out of riverbank over stream
3	Crack Willow	Semi mature	5	2	2	2	2	1	1	1	1	1	1	400	0.6	1.1	Fair	Fair	Fair	Fair	C	1	10+	Small coppice stool
4	Crack Willow	Semi mature	5	2	2	2	2	3	2	2	2	2	2	270	0.6	1.1	Fair	Fair	Fair	Fair	C	1	10+	Small coppice stool
5	Stump	Dead	1					3n	3	3	4	3	3	220	n/a	n/a	Dead	Dead	Dead	Dead	U	1	<10	Large stump
6	Common Ash	Mature	18	5	5	5	5	0.1	0.2	0.2	0.2	0.2	0.2	120	11.0	383.0	Fair	Ivy	Poor	Poor	B	2;1	<10	Twisting twin stemmed included union. Lots of deadwood in crown. Ivy obscures trunk. Base growing around metal fence and hanging over river.
7	Common Alder	Early mature	8	4	4	2	4	4e	5	4	4	4	5	240	5.4	91.6	Fair	Fair	Fair	Fair	C	2;1	10+	Riverbank tree
8	Sycamore	Semi mature	10	2	2	2	2	2n	2	4	4	4	2	320	3.4	35.5	Fair	Fair	Fair	Fair	C	1	10+	Riverbank tree
9	Common Alder	Early mature	10	4	4	4	4	6s	5	5	5	5	5	270	7.0	152.2	Fair	Ivy	Fair	Fair	C	2;1	10+	Large deadwood in crown, ivy obscures parts of trunk. metal fence in trunk base
10	Common Ash	Early mature	12	6	4	7	4	4	5	5	5	5	5	310	4.4	61.9	Fair	Ivy	Fair	Fair	C	2;1	10+	Tangled with smaller sycamore tree. Deadwood in crown. Large limb over road. riverbank tree
11	Poplar	Semi mature	11	3	3	3	3	6s	6	6	5	6	6	320	3.5	38.1	Fair	Fair	Fair	Fair	C	2;1	20+	Young grey poplar
12	Sycamore	Mature	14	6	6	6	6	0.2	0.2	0.2	0.2	0.2	0.2	75	9.0	254.5	Good	Ivy	Fair	Fair	B	2;1	20+	Riverbank tree, large sycamore
13	Sycamore	Mature	14	6	6	5	4	1	1	1	1	1	7	480	9.4	275.3	Good	Good	Fair	Good	B	2;1	20+	Split branches, riverbank tree
14	Sycamore	Mature	17	7	6	6	4	0.2	0.2	0.2	0.2	0.2	10	150	10.0	311.7	Good	Ivy	Fair	Fair	B	1;2	20+	Riverbank tree
15	Sycamore	Semi mature	7	2	3	3	3	0.3	0.3	0.3	0.3	0.3	10	50	2.9	26.1	Fair	Fair	Fair	Fair	C	1	10+	Riverbank tree
16	Common Alder	Young	3.5	2	2	2	2	0.3	0.3	0.3	0.3	0.3	10	50	1.1	3.7	Good	Good	Good	Good	C	1	20+	Riverbank tree
17	Leyland Cypress	Semi mature	8	1.5	3	3	3	0.5	0.5	0.5	0.5	0.5	1	1250	3.6	40.7	Good	Good	Good	Good	C	2	20+	
18	Common Alder	Early mature	16	3	3	3	3	2	5	5	5	5	2	920	4.3	58.6	Good	Good	Good	Good	B	2;1	20+	Riverbank tree
19	Common Alder	Early mature	16	3	3	5	3	0.2	0.2	0.2	0.2	0.2	6	450	5.6	99.9	Good	Good	Good	Good	B	1;2	20+	Riverbank tree
20	Common Hawthorn	Mature	7	4	4	4	4	2	3	3	3	3	1	280	6.2	122.3	Poor	Good	Good	Good	B	2;1	20+	
21	Leyland Cypress	Early mature	9	4	4	4	4	0.1	0.3	0.3	0.3	0.3	10	580	6.0	113.1	Good	Good	Good	Good	C	2	20+	
22	Sycamore	Early mature	17	7	6	6	7	0.3	3	2	6	2	3	370	10.7	358.4	Good	Good	Good	Good	B	1;2	20+	

Tag Number	Tree Type	Life Stage	Height (m)	Crown Spread (m)				Crown Height					No of Stems	Stem Diameter (mm)	Root Protection Area (RPA)		Condition				BS5837 Category		Useful remaining contribution (years)	Comment
				N	E	S	W	Height + direction 1st significant branch (m)	N	E	S	W			RPA Radius (M)	RPA (m2)	Crown	Stem	Basal Area	General Physical	Category	Sub Category		
23	Common Oak	Mature	20	6	6	6	6	2	3	3	3	3	2	290	14.9	695.7	Fair	Good	Good	Good	A	2;1	40+	Snapped out branches but strong and healthy
24	Cherry Laurel	Early mature	6	2	3	2	3	1	2	2	2	2	3	750	4.2	55.4	Good	Good	Good	Good	B	1;2	10+	
25	Leyland Cypress	Young	3	1	2	1	2	3w	5	1	1	1	1	780	1.4	6.5	Good	Good	Good	Good	C	2	20+	
G1	Mixed Native	Early mature	10					2w	2	2	2	2	1	830	3.6	40.7	Fair	Fair	Fair	Fair	B	2;1	20+	Dense mix of; ash, wych elm, sycamore, alder
G2	Mixed Native	Semi mature	6					0.5	0.5	0.5	0.5	0.5	5	240	2.9	26.1	Good	Good	Good	Good	B	2;1	20+	Understory layer of semi mature trees; ash, alder, sycamore, willow, wych elm extending east and expanding into a larger wooded area.
H1	Leylandii	Semi mature	1.5					0.2	0.3	0.3	0.3	0.3	3	90	0.9	2.5	Good	Good	Good	Good	C	2	40+	Leylandii
H2	Hawthorn	Early mature	1.5					0.3	0.5	0.5	0.5	0.5	1	300	1.2	4.5	Good	Good	Good	Good	B	2;1	20+	Hawthorn
H3	Mixed Native	Early mature	2					0.1	5	5	3	5	2	360	0.9	2.5	Good	Good	Good	Good	B	2;1	20+	Hawthorn, privet, holly, sycamore

Appendix D. Root Protection Area Calculations

Table D.1: Root Protection Area Calculations in Accordance with BS5837:2012

Tree	Species	Stem Diameter (mm)	*RPA Circle Radius (m)	*RPA (m^2)
1	Common Alder	480	5.8	104.2
2	Crack Willow	150	1.8	10.2
3	Crack Willow	50	0.6	1.1
4	Crack Willow	50	0.6	1.1
5	Stump	1250	n/a	n/a
6	Common Ash	920	11.0	383.0
7	Common Alder	450	5.4	91.6
8	Sycamore	280	3.4	35.5
9	Common Alder	580	7.0	152.2
10	Common Ash	370	4.4	61.9
11	Poplar	290	3.5	38.1
12	Sycamore	750	9.0	254.5
13	Sycamore	780	9.4	275.3
14	Sycamore	830	10.0	311.7
15	Sycamore	240	2.9	26.1
16	Common Alder	90	1.1	3.7
17	Leyland Cypress	300	3.6	40.7
18	Common Alder	360	4.3	58.6
19	Common Alder	470	5.6	99.9
20	Common Hawthorn	520	6.2	122.3
21	Leyland Cypress	500	6.0	113.1
22	Sycamore	890	10.7	358.4
23	Common Oak	1240	14.9	695.7
24	Cherry Laurel	350	4.2	55.4
25	Leyland Cypress	120	1.4	6.5
G1	Mixed Native	300	3.6	40.7
G2	Mixed Native	240	2.9	26.1
H1	Leylandii	75	0.9	2.5
H2	Hawthorn	100	1.2	4.5
H3	Mixed Native	75	0.9	2.5

Appendix E. Temporary Protective Fencing and Ground Protection

Permission to reproduce extracts from British Standard BS 5837:2012 Trees in relation to design, demolition and construction - Recommendations is granted by BSI. British Standards can be obtained in PDF or hard copy formats from the BSI online shop: www.bsigroup.com/Shop or by contacting BSI Customer Services for hardcopies only: Tel: +44 (0)20 8996 9001, Email: cservices@bsigroup.com.

E.1 Extract from BS5837:2012: Default Specification for Protective Barrier

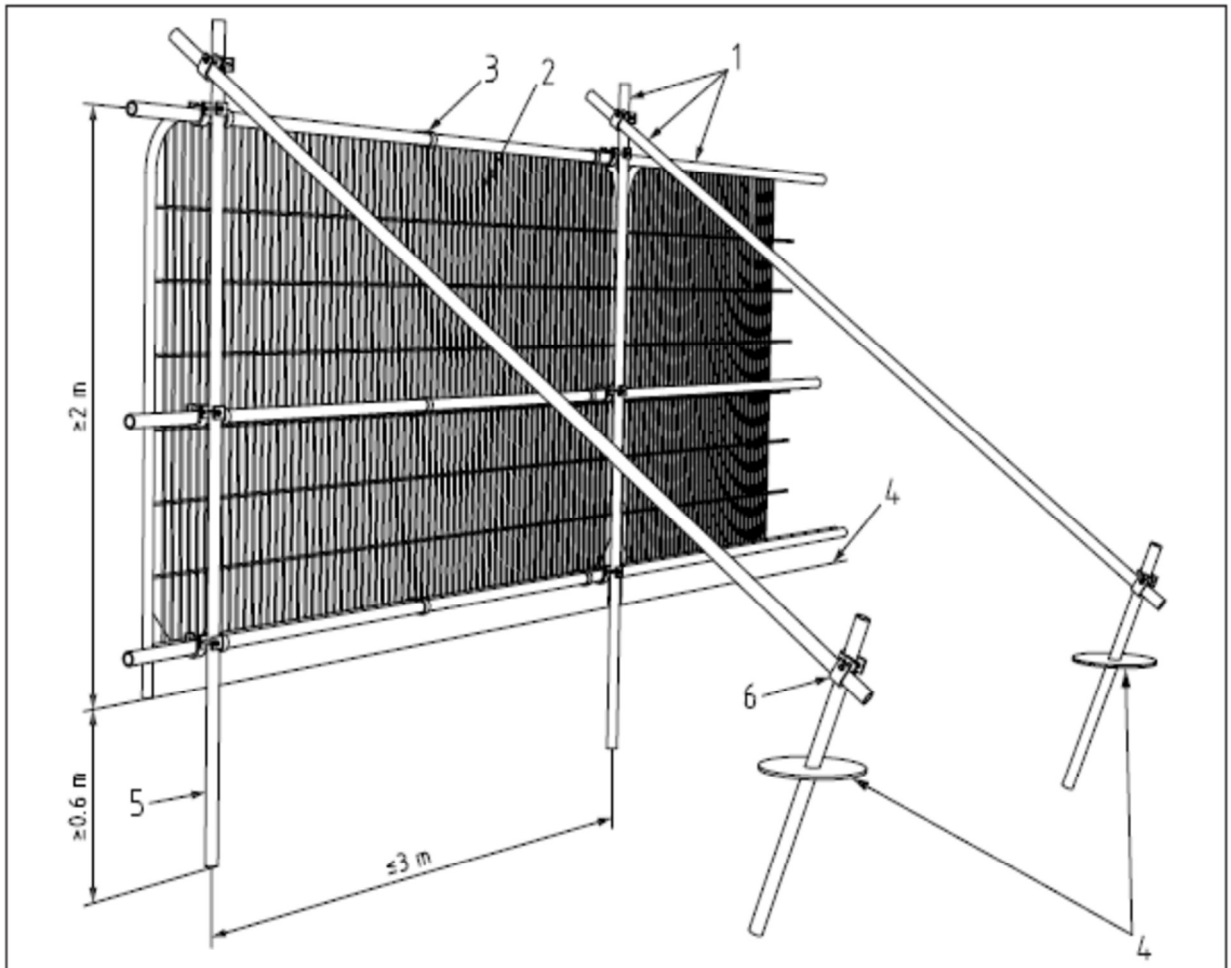

Key

1 Standard scaffold poles
2 Heavy gauge 2 m tall galvanized tube and welded mesh infill panels
3 Panels secured to uprights and cross-members with wire ties
4 Ground level
5 Uprights driven into the ground until secure (minimum depth 0.6 m)
6 Standard scaffold clamps

E.2 Extract from BS5837:2012: Examples of above ground stabilizing systems

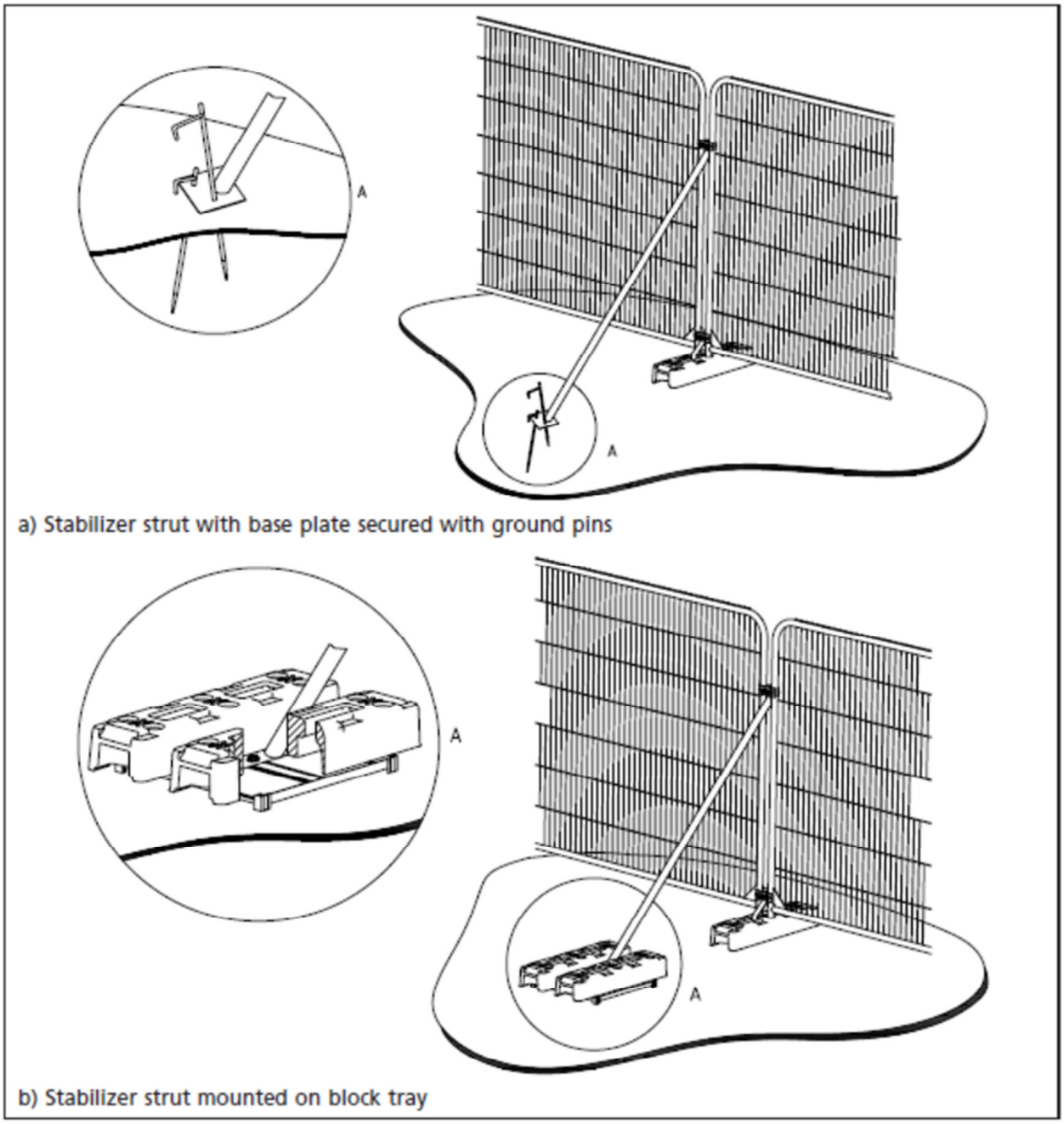

E.3 Extract from BS5837:2012 Ground Protection during Demolition and Construction

6.2.3.2 Where the set-back of the tree protection barrier would expose unmade ground to construction damage, new temporary ground protection should be installed as part of the implementation of physical tree protection measures prior to work starting on site.

6.2.3.3 New temporary ground protection should be capable of supporting any traffic entering or using the site without being distorted or causing compaction of underlying soil.

NOTE The ground protection might comprise one of the following:

a) for pedestrian movements only, a single thickness of scaffold boards placed either on top of a driven scaffold frame, so as to form a suspended walkway, or on top of a compression-resistant layer (e.g. 100 mm depth of woodchip), laid onto a geotextile membrane;

b) for pedestrian-operated plant up to a gross weight of 2 t, proprietary, inter-linked ground protection boards placed on top of a compression-resistant layer (e.g. 150 mm depth of woodchip), laid onto a geotextile membrane;

c) for wheeled or tracked construction traffic exceeding 2 t gross weight, an alternative system (e.g. proprietary systems or pre-cast reinforced concrete slabs) to an engineering specification designed in conjunction with arboricultural advice, to accommodate the likely loading to which it will be subjected.

6.2.3.4 The locations of and design for temporary ground protection should be shown on the tree protection plan and detailed within the arboricultural method statement (see **6.1**).

6.2.3.5 In all cases, the objective should be to avoid compaction of the soil, which can arise from the single passage of a heavy vehicle, especially in wet conditions, so that tree root functions remain unimpaired.

Appendix F. Glossary

Adventitious Bud	Adventitious buds develop from places other than a shoot at the tip of a stem e.g. along a branch, often formed as a result of stress e.g. after the stem is wounded or pruned.
AGL (Above Ground Level)	Terminology (prefixed by a measurement) stated within the Tree Survey Schedule to reference the location/height of a particular tree feature or tree part
Co-dominant stem	A stem that has grown in direct competition to the main stem and which has formed a substantial size influencing the appearance of the tree
Crown Lift	The removal of the lowest branches, usually to a specified height. It can be used to allow more residual light and greater clearance underneath the canopy for vehicles etc.
Dieback	Where branches are beginning to show signs of death usually at the tips of the crown
Epicormic growth	Small branches that grow in uncharacteristic clusters around the base of a tree, usually as a result of bad pruning or other stress factor
Etiolated	Tall, thin tree which has extended vertically without substantial lateral development. Usually as a result of competition for light from other species
'Hung up' branch	A branch which has become detached from the tree but is prevented from falling to the ground by the presence of other branches within the crown
Included bark	Where the bark on two adjoining branches or stems is growing tight together, forming a joint with limited physical strength
ms	A multi-stemmed tree
Pollarding	A method of tree management in which the main trunk of the tree is cut at a particular height, and the resulting branches are then cropped on a regular basis
Occluded Wound	The overgrowth of a wound with (callus) tissue produced subsequently.
RPA (Root Protection Area)	The theoretical rooting area of a tree defined by BS5837:2005 Trees in Relation to Construction - Recommendations
Stag -headed	Describes the silhouette of a large tree whose crown has died back so that the ends of the dead branches protrude like spikes or antlers from the reduced live foliated crown.
Topping	Topping is a form of pruning that removes terminal growth leaving a 'stub' cut end. Topping causes serious health problems to a tree

Appendix G. References

British Standard BS 5837:2012 Trees in Relation to design, demolition and construction – Recommendations; April 2012; ISBN 978 0 580 69917 7

British Standard BS 3998:2010 Recommendations for Tree Work; Third (present) edition, December 2010; ISBN 978 0 580 53777 6

The National Joint Utilities Group, Issue 1 – 8th October 2007, Volume 4 - Guidelines for the Planning, Installation and Maintenance of Utility Apparatus in Proximity to Trees

Arboricultural Association, 1991, Leaflet 4 - Tree Management