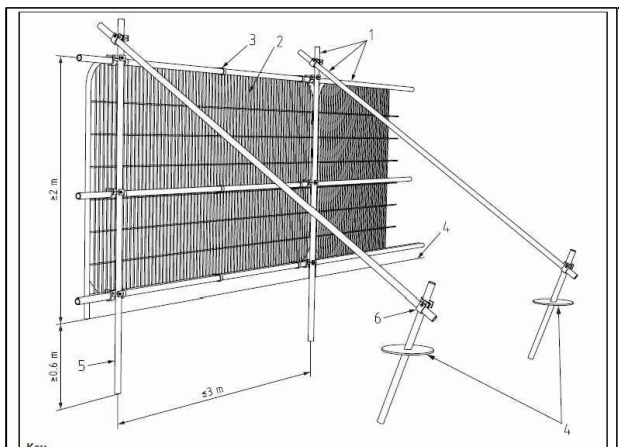

Key

1 Standard scaffold poles
2 Heavy gauge 2 m tall galvanized tube and welded mesh infill panels
3 Panels secured to uprights and cross-members with wire ties
4 Ground level
5 Uprights driven into the ground until secure (minimum depth 0.6 m)
6 Standard scaffold clamps

Detail 01 Protective Fencing

Pond 1
Pond 1
Pond 3
Pond 4

Existing Electricity Easment

EMERGENCY GENERATOR

CYCLES

+ 1.4
+ 0.6
+ 0.5
+ 0.5
+ 1.4
+ 0.6
+ 2.3
+ 1.1
+ 0.8
+ 0.6

NEWT UNDERPASS

1 in 2 batter slope to construction edge

Existing Electricity Easment

ABENBURY WAY

Removed Tree

Retained Tree

Protective scaffolding fence in accordance with BS 5837:2012 (see Detail 01). Defining Construction Exclusion Zone (CEZ)

Root Protection Area
For further detail refer to Tree Survey and Arboricultural Constraints Report

+0.6 Proposed level change (m)

Existing scrub to be retained

Existing vegetation to be removed

Cellweb Root Protection Construction (See Detail 01)

Approximate proposed service routes

Root protection fencing shall be erected before any materials or machinery are brought onto the site, and before any stripping of soil commences. Vertical fencing to be erected to create a construction exclusion zone around existing trees. Signs to be placed on the fencing "CONSTRUCTION EXCLUSION ZONE – NO ACCESS".

For further details and method statement refer to Tree Survey and Arboricultural Constraints Report prepared by Wyn Davies 31-01-2014

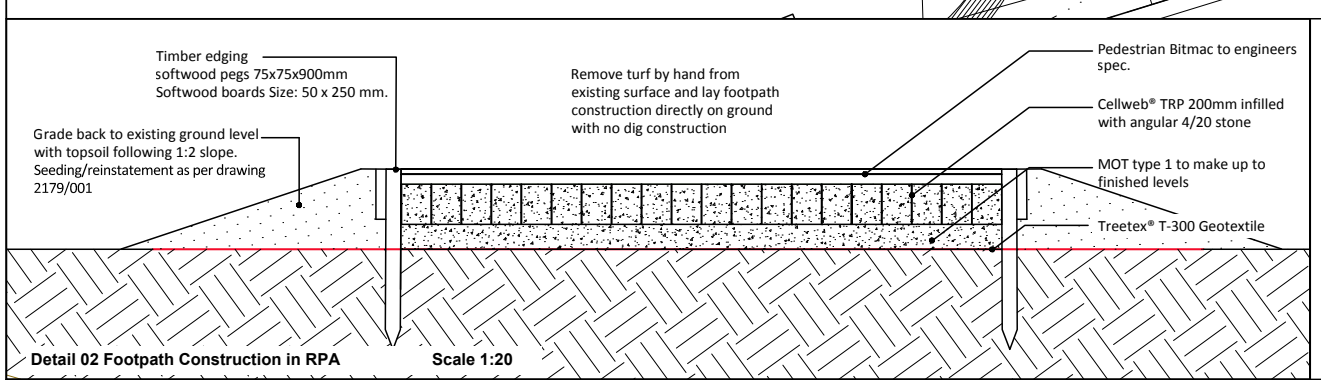

Detail 02 Footpath Construction in RPA **Scale 1:20**

Environmental Consultants • Landscape Architects • Urban Designers
Planners • Landscape Managers • Ecologists
10 Park Grove Cardiff CF10 3BN T:029 2022 8966

CYTEC
Plot C4 - Wrexham Industrial Estate
Tree Protection Plan

Drawn EMK Checked PMcC Scale 1:250@A1 Date May 2015 Office Cardiff Drwg No 2179/002