Arboricultural Impact Assessment/Method Statement

Land off Wheatsheaf Lane, Gwersyllt, Wrexham

Prepared for:

WALES AND WEST HOUSING
C/o Lovelock Mitchell Architects

Our Ref: 14/AIA/WXM/152

16 September 2014

Tree Solutions Ltd

T: 01244 389114
E: info@tree-solutions.co.uk
W: www.tree-solutions.co.uk

Contents:

1.0	Instruction
2.0	Statutory Controls & Planning Policy
3.0	The Site
4.0	Development Proposal
5.0	General Constraints Data – Construction Exclusion Zones
6.0	Survey Methodology
7.0	Juxtaposition of Trees & Structures
8.0	Demolition/Development Impact to Trees
9.0	Proposed Revisions
10.0	Conclusions
11.0	Limiting Conditions

Appendix 1	Tree Survey Schedule
Appendix 2	Preliminary Tree Constraints Plan
Appendix 3	Arboricultural Impact Plan
Appendix 4	Tree Protection Plan
Appendix 5	Tree Protection Measures/Method Statement

1.0 INSTRUCTIONS

1.1 We have been instructed by Wales & West Housing via Lovelock Mitchell Architects to carry out an Arboricultural Impact Assessment (AIA) in order to assess the development proposal in relation to trees in accordance with the principles of British Standard 5837 'Trees in Relation to Design, Demolition & Construction - Recommendations' 2012.

1.2 We are instructed to prepare a report in order to provide information to assist all parties involved in the planning process to make balanced judgements with regard to arboricultural features in relation to the proposed residential development on land off Wheatsheaf Lane, Gwersyllt, Wrexham. As such, all trees within influencing distance to the required easement have been surveyed and are listed within a Tree Survey Schedule (***Appendix 1***) and plotted on all accompanying plans.

1.3 The tree survey was carried out on 07 August 2014 by Alistair Henderson, Principal Consultant to Tree Solutions Ltd. Our appraisal of the mechanical integrity of trees on the site is sufficient only to inform the current project. The assessment of trees is carried out from ground level without invasive investigation and the disclosure of hidden defects cannot therefore be expected. Whilst the survey is not specifically commissioned to report on matters of tree safety, we report obvious defects that are significant in relation to the existing and proposed land use. We do not carry out detailed safety inspections unless specifically instructed to do so in writing and have not carried out such inspections of trees on the proposal site.

1.4 Eight individual trees (T1 – T8) and four group (G1-G4) were surveyed and mapped on an Impact Assessment Plan Ref: 14/AIA/WXM/152 Drawing Nos. 1 at ***Appendix 2.*** All arboricultural information recorded during the survey is presented within a schedule at ***Appendix 1***.

1.5 The Arboricultural Impact Assessment is based on the proposed site layout plan Ref: 1246 (102) Rev F provided by Lovelock Mitchell Architects.

2.0 STATUTORY CONTROLS & PLANNING POLICY

2.1 In terms of impacts on trees, the planning application will be assessed against Policy EC4 of the Wrexham County Borough Council Unitary Development Plan (2005) and Local Planning Guidance Note 17 'Trees & Development' (2010).

2.1.2 We have not ascertained if any trees are subject to a Tree Preservation Order or if the site falls within a designated Conservation Area. You are advised to seek this information in writing prior to undertaking any works.

2.2 Protected Species

2.2.1 Mature trees often contain cavities, crevices and hollows that offer potential habitat for species such as bats and barn owls. Both are afforded protection under the Schedule 5 of the Wildlife and Countryside Act 1981 (as amended), as well as The Conservation (Natural Habitats, &c) (Amendment) Regulations 2007.

2.3 Wildlife Habitats

2.3.1 Trees and hedgerows of most species provide valuable nesting sites for a wide range of birds and it is likely that nesting birds will be present on the site during the period March to September.

3.0 THE SITE

3.1 The site is a vacant building plot access off Wheatsheaf Lane. It contains a small linear copse of mature Birch trees along the western boundary and unmanaged scrub to the south. There is a children's play area to the west, second avenue to the south and residential dwellings beyond all other boundaries.

4.0 DEVELOPMENT PROPOSAL

4.1 Erection of four semi-detached residential dwellings with associated vehicular access and parking.

 © Tree Solutions Ltd (2014)

5.0 GENERAL CONSTRAINTS DATA - CONSTRUCTION EXCLUSION ZONES (CEZ's)

5.1 GENERAL

5.1.1 The three phases of an AIA were outlined in Section 1. In addition, during the development process for retention trees, there may be three and even four constraints to consider: Construction Exclusion Zone (CEZ's):

- CEZ 1: Root Protection Area (see 5.2)
- CEZ 2: Tree Crown Protection (see 5.3)
- CEZ 3: Tree Dominance (see 5.4)
- CEZ 4: New Tree Planting Zone (see 5.5)

CEZ's are explained below:

5.2 CEZ 1: ROOT PROTECTION AREA (RPA)

5.2.1 The RPA, calculated in m2, should be protected before and during any demolition/construction works. This ensures the effective retention of trees by safeguarding a reliable quantum of functioning tree roots. The RPA is based on a radial measure from the centre of the tree stem, which is calculated by multiplying the stem diameter by a factor of twelve or by the (mean stem diameter^2) x number of stems for multi-stemmed trees. With the AIA 1, the RPA is only shown indicatively on the preliminary TCP, as its shape may be subject to amendment as the design progresses.

5.2.2 During the AIA 2, the derived radial measure is converted by the arboriculturalist into the actual area to be protected, having due regard to prevailing site conditions and how these may have affected the tree(s), particularly in relation to factors affecting their likely rooting disposition. The RPA for each tree should initially be plotted as a circle centred on the base of the stem. Where pre-existing site conditions or other factors indicate that rooting has occurred asymmetrically, a polygon of equivalent area should be produced. Modifications to the shape of the RPA should reflect a soundly based arboricultural assessment of likely root distribution.

5.2.3 The means of protecting the RPA will include the installation of tree protective fencing prior to the start of any demolition or construction work on site. The prohibition of various activities within the RPA must be adhered to (e.g. mechanical excavation, soil stripping, fire lighting, material storage, lowering levels and creating excessive sealed surfacing) and may include the use of temporary ground protection and/or special engineering solutions where construction is proposed near to retention trees or within the RPA.

5.3 CEZ 2: TREE CROWN PROTECTION ZONE

5.3.1 This is the area above ground occupied by the crown (branches) of the tree, along with allowances for working space (safe working area) and if appropriate, for future growth. The extent of CEZ 2 is determined by considering the existing and future crown spread of the tree(s), bearing in mind the possibility of this being modified by an acceptable quantum of pruning.

5.4 CEZ 3: TREE DOMINANCE ZONE

5.4.1 This is the area above ground dominated by the tree in relation to issues of shading, seasonal debris and safety apprehension. This area is calculated by considering the height and spread of the tree relative to the proposed buildings, cross referenced with intended end use. As such, what is assessed is the likely psychological effect of the tree on the end user.

5.4.2 The purpose of identifying CEZ 3 is to protect trees from post development pressure (resentment) by the site's end users, who may, if resentful of the trees, seek to procure excessive pruning treatments or even to have them removed. This is a common Planning Service concern, which has led on many occasions both to refusals of consent and to dismissed Appeals against those refusals.

5.4.3 The means of protecting CEZ 3 is likely to include optimising the site layout and room type (especially in relation to new residential dwellings), such that any adverse psychological impacts of the trees are reduced to an acceptable minimum. Key principles include ensuring adequate separation distances between trees and new buildings, in the context of the buildings' end use relative to the location of the tree(s) and avoiding excessive obstruction by trees of critical solar access.

 © Tree Solutions Ltd (2014)

5.5 CEZ 4: NEW PLANTING ZONE

5.5.1 In some cases, it may be appropriate to identify and protect areas intended for new landscape planting, which can fail to establish if the soil has been heavily compacted or contaminated during the demolition/construction process. The means of protecting CEZ 4 will either be by fencing it off prior to the start of works on site, or by soil remediation once construction has finished (and prior to the start of planting). Topsoil protection in areas destined for new planting is frequently an economy measure, saving on plant replacement and soil structure remediation.

6.0 SURVEY METHODOLOGY

6.1 The method used in the preparation of this report is based on the principles of BS 5837: 2012.

1. Tree heights were surveyed to the nearest 1m.

2. Trunk diameters were measured by use of forestry girth tape

3. The category assessment (Table 1) on which the trees is based include current and long-term arboricultural, landscape, cultural and conservation values (BS5837: 2012). This table can be found at ***Appendix 1***

4. For clarity, the grading system is summarised from ***Table 2*** of the BS as follows:

   U grade – trees for removal, effective for less than 10 years

   A grade – trees of high quality and value, effective for more than 40 years

   B grade – trees of moderate quality and value, effective for more than 20 years

   C grade – trees of low quality and value, effective for 10 years

   Note: We have indicated colour coding on the drawing and therefore a monochrome copy should not be relied on.

6.2 SOIL ASSESSMENT

6.2.1 A soil assessment should be undertaken by a competent person to inform decisions relating to:

- the root protection area (RPA)
- tree protection
- new planting design; and
- foundation design to take account of retained, removed and new trees (potential soil subsidence/heave)

Tree Solutions do not undertake soil assessments and the client is advised to seek specialist advice in this respect.

7.0 JUXTAPOSITION OF TREES AND STRUCTURES

7.1 Below ground constraints

7.1.1 The below ground constraints are generally summarised as the root protection area (RPA). The shape of the RPA and its exact location will depend upon arboricultural considerations including likely tolerance of the tree to root disturbance; morphology and disposition of the roots when known influenced by past or existing site conditions; soil type and structure; and topography and drainage.

7.1.2 The purpose of the RPA is to prevent physical damage to tree roots and to prevent damage to the soil structure. Tree roots are damaged by soil compaction, changes in soil levels or soil contamination which could reduce tree health and/or stability.

7.1.3 Root patterns are affected by topography and characteristics of the soil or substrate. Where trees are located within close proximity to existing hard standing or underground physical barriers they are unlikely to have an even distribution of lateral roots due to restrictions in root growth created by compacted sub-grades beneath. There was no underground barrier evident at the time of inspection that would prevent good radial root spread. All RPA's have therefore been plotted unmodified.

 © Tree Solutions Ltd (2014)

8.0 DEVELOPMENT IMPACT TO TREES

8.1 In order to accommodate the proposed development, tree number 6 and group 1 require to be removed as plot 1 & 2 encroach significantly within their RPA. Tree number 6 is a common Willow that whilst visible from Second Avenue is not a significantly important tree and its retention value is considered disproportionate to the value of providing housing to the area. Group 1 is low value scrub of no importance. The removal of this group and T6 will have no adverse impact on the landscape character and setting of the locale.

8.2 Group 2 is a dense linear copse of unmanaged Birch trees that form one large continuous closed canopy along the western boundary. As these trees will collectively cause shading to the rear gardens of each plot, we have recommended that the group be thinned out to leave individual trees. This will safeguard the landscape/amenity value they afford to the area and at the same time allow an acceptable volume of daylight to penetrate through to the dwellings. This was considered the most sustainable option rather than removal of all trees.

8.3 Whilst unnecessary to accommodate any development we have recommended the removal of groups 1 and 3 as they are poor quality unmanaged trees that give the site an unkempt appearance. Their removal will allow space to plant better quality trees and boundary hedgerows that will radically enhance the future appearance of the housing development.

9.0 PROPOSED REVISIONS TO THE SCHEME

9.1 We advise that all proposed revisions having implications for trees should be referred to us for review.

10.0 CONCLUSIONS

10.1 BS 5837: 2012 contains clear and current recommendations for a best practice approach to the assessment, retention and protection of trees on development sites. The proposed development has followed this guidance by:

- Seeking arboricultural advice and undertaking a phase 1 preliminary tree survey in order to inform the layout and design of the proposed development
- Respecting the constraints posed to development of the site by high or moderate quality trees
- Acting upon arboricultural advice throughout the design process in order to obtain the best development proposal whilst considering the current and future tree requirements

© Tree Solutions Ltd (2014)

Appendix One

Tree Survey Schedule

© Tree Solutions Ltd (2014)

TREE SURVEY SCHEDULE (BS5837: 2012)

TREE SOLUTIONS LTD

SITE:	LAND OFF WHEATSHEAF LANE/SECOND AVENUE, GWERSYLLT, WREXHAM
CLIENT:	WALES & WEST HOUSING
BRIEF:	ARBORICULTURAL IMPACT ASSESSMENT

SURVEYOR:	A. HENDERSON
ASSESSMENT DATE:	07 AUGUST 2014
VIEWING CONDITIONS:	GOOD
JOB REFERENCE:	14/AIA/WXM/152

TREE NO. T - Tree G - Group H- Hedge	SPECIES (COMMON NAME)	AGE	HEIGHT (m) + CROWN CLEARANCE/ DIRECTION OF GROWTH (N.S.E.W)	RADIAL CROWN SPREAD (m) N	S	E	W	STEM/ MULTI-STEM* DIA.(mm)	VITALITY	COMMENTS	MANAGEMENT	CATEGORY & SUB-CATEGORY GRADING BS 5837	BS 5837 RADIUS (m) RPA (m^2)
T1	Hawthorn	M	10 1S	3	3	2.5	2.5	100x 8 (283)	G	• Overgrown unmanaged hedge plant • Multi-stemmed • E.R.C. 20	• N/A	B2	3.4 36m²
T2	Sycamore	M	16 2S	4	5	5	4.5	210 420 200 240 300 (639)	G	• Multi-stemmed tree with minor included unions • Past coppiced • Roots confined to south by corrugated iron retaining structure • E.R.C. 20	• N/A for development	B2	7.7 185m²
T3	Hawthorn	M	6 4S	2.5	2.5	2	2	100x 5 (224)	G	• As T1 • Unable to access stems • E.R.C. 10+	• N/A	C2	2.7 23m²

HEADINGS & ABBREVIATIONS

TREE NO.	REFERENCE NUMBER. REFER TO PLAN OR NUMBERED TAGS WHERE APPLICABLE (T = TREE, G = GROUP, H = HEDGE)
SPECIES:	COMMON NAME (LATIN NAMES AVAILABLE ON REQUEST)
AGE RANGE/LIFE STAGE:	Y = YOUNG, SM = SEMI MATURE, EM = EARLY MATURE, M = MATURE, PM = POST MATURE
HEIGHT:	ESTIMATED AND RECORDED IN METRES. APPROXIMATELY 1 IN 10 TREES ARE MEASURED USING A CLINOMETER AND THE REMAINDER ESTIMATED AGAINST THE MEASURED TREES
CROWN SPREAD:	MAXIMUM CROWN RADIUS MEASURED TO THE FOUR CARDINAL COMPASS POINTS FOR SINGLE SPECIMENS ONLY (MEASUREMENT FOR TREE GROUPS - MAXIMUM RADIUS OF THE GROUP)
CROWN CLEARANCE & DIRECTION OF GROWTH:	HEIGHT IN METERS OF CROWN CLEARANCE ABOVE ADJACENT GROUND LEVEL (TO INFORM ON GROUND CLEARANCE, CROWN/STEM RATIO AND SHADING)
STEM DIA/MULTI-STEM DIA:	STEM DIAMETER - MEASURED AT APPROXIMATELY 1.5 METRES ABOVE GROUND LEVEL OR A COMBINATION OF STEMS FOR MULTI-STEMMED TREES
VITALITY:	A MEASURE OF PHYSIOLOGICAL CONDITION. D = DEAD, MD = MORIBUND, P = POOR, M = MODERATE, G = GOOD
E.R.C. = ESTIMATED REMAINING CONTRIBUTION:	RELATIVE USEFUL LIFE EXPECTANCY (YEARS)
BS 5837CATEGORY & SUB-CATEGORY GRADING:	A = HIGH QUALITY AND VALUE, B = MODERATE QUALITY AND VALUE, C = LOW QUALITY AND VALUE, U = UNSUITABLE FOR RETENTION (SUB-CATEGORY REFERS TO ARBORICULTURAL., LANDSCAPE AND CULTURAL/CONSERVATION VALUES)
BS 5837 RADIUS & BS 5837 RPA:	PROTECTIVE DISTANCE - RADIUS FROM THE CENTRE OF THE STEM TO THE LINE OF TREE PROTECTION (CONSTRUCTION EXCLUSION ZONE - CEZ) AND PROTECTIVE BARRIER ROOT PROTECTION AREA - BS 5837 (2012) ANNEX D (THE RECOMMENDATIONS STATE THAT THE RPA SHOULD BE CAPPED AT 707 M^2) NOTE – ALL CALCULATIONS ROUNDED TO NEAREST DECIMAL

TREE SURVEY SCHEDULE (BS5837: 2012) *TREE SOLUTIONS LTD*

SITE:	LAND OFF WHEATSHEAF LANE/SECOND AVENUE, GWERSYLLT, WREXHAM
CLIENT:	WALES & WEST HOUSING
BRIEF:	ARBORICULTURAL IMPACT ASSESSMENT

SURVEYOR:	A. HENDERSON
ASSESSMENT DATE:	07 AUGUST 2014
VIEWING CONDITIONS:	GOOD
JOB REFERENCE:	14/AIA/WXM/152

TREE NO. T - Tree G - Group H- Hedge	SPECIES (COMMON NAME)	AGE	HEIGHT (m) + CROWN CLEARANCE/ DIRECTION OF GROWTH (N.S.E.W)	RADIAL CROWN SPREAD (m) N	S	E	W	STEM/ MULTI-STEM* DIA.(mm)	VITALITY	COMMENTS	MANAGEMENT	CATEGORY & SUB-CATEGORY GRADING BS 5837	BS 5837 RADIUS (m) RPA (m^2)
T4	Holly	M	5 1S	4	2	2	2	220	M	• Ivy clad unmanaged hedge • E.R.C. 10	• N/A	C2	2.6 22m²
T5	Willow (S. caprea)	M								• Vandalised tree with significant crown dieback • E.R.C. 0	• Fell	U	N/A
T6	Willow (S. caprea)	M	15 3S	4.5	5	5	5	300 300 280 390 (641)	G	• 4 stems from 1.2m • E.R.C. 10-20	• Fell for development	B2	7.7 186m²
T7	Birch	EM	11 0E	1.5	1	1.5	1	150	M/G	• Small tree of no visual importance • E.R.C. 10	• N/A for development	C2	1.8 10m²
T8	Birch	EM	11 0.5E	1.5	2.5	1	1	110	M/G	• As T7	• As T7	C2	1.3 5m²
G1	Ash/Elm/ Sycamore	SM							P	• Area of coppiced trees with subsequent small diameter secondary growth above stool • Poor quality • E.R.C. 10	• Fell & replace with hedgerow	U	N/A

TREE SURVEY SCHEDULE (BS5837: 2012)

TREE SOLUTIONS LTD

SITE:	LAND OFF WHEATSHEAF LANE/SECOND AVENUE, GWERSYLLT, WREXHAM
CLIENT:	WALES & WEST HOUSING
BRIEF:	ARBORICULTURAL IMPACT ASSESSMENT

SURVEYOR:	A. HENDERSON
ASSESSMENT DATE:	07 AUGUST 2014
VIEWING CONDITIONS:	GOOD
JOB REFERENCE:	14/AIA/WXM/152

TREE NO. T - Tree G - Group H- Hedge	SPECIES (COMMON NAME)	AGE	HEIGHT (m) + CROWN CLEARANCE/ DIRECTION OF GROWTH (N.S.E.W)	RADIAL CROWN SPREAD (m) N	S	E	W	STEM/ MULTI-STEM* DIA.(mm)	VITALITY	COMMENTS	MANAGEMENT	CATEGORY & SUB-CATEGORY GRADING BS 5837	BS 5837 RADIUS (m) RPA (m^2)
G2	Birch	M	≤17 1E	4	3	4	4	≤410	G	• Linear group of trees • Prominent skyline feature to locale • E.R.C. 20	• Thin out to leave individual trees as indicated on plans	B2	4.9 76m²
G3	Ash/Willow	M	≤10 1W	1	3	2	2	≤200	M/P	• Poor quality trees with asymmetric crown form due to heavy light suppression by G2 - no room to establish • E.R.C. 0	• Fell & replace boundary fence	C2	2.4 18m²
G4	Damson/Plum	EM	≤4 0					≤120	M	• Area of small trees of no value • E.R.C. 0	• Clear for development	C2	1.4 7m²

Table 1 **Cascade chart for tree quality assessment**

Category and definition	Criteria (including subcategories where appropriate)			Identification on plan
Trees unsuitable for retention (see Note)				
Category U Those in such a condition that they cannot realistically be retained as living trees in the context of the current land use for longer than 10 years	• Trees that have a serious, irremediable, structural defect, such that their early loss is expected due to collapse, including those that will become unviable after removal of other category U trees (e.g. where, for whatever reason, the loss of companion shelter cannot be mitigated by pruning) • Trees that are dead or are showing signs of significant, immediate, and irreversible overall decline • Trees infected with pathogens of significance to the health and/or safety of other trees nearby, or very low quality trees suppressing adjacent trees of better quality *NOTE Category U trees can have existing or potential conservation value which it might be desirable to preserve; see **4.5.7**.*			See Table 2
	1 Mainly arboricultural qualities	**2 Mainly landscape qualities**	**3 Mainly cultural values, including conservation**	
Trees to be considered for retention				
Category A **Trees of high quality** with an estimated remaining life expectancy of at least 40 years	Trees that are particularly good examples of their species, especially if rare or unusual; or those that are essential components of groups or formal or semi-formal arboricultural features (e.g. the dominant and/or principal trees within an avenue)	Trees, groups or woodlands of particular visual importance as arboricultural and/or landscape features	Trees, groups or woodlands of significant conservation, historical, commemorative or other value (e.g. veteran trees or wood-pasture)	See Table 2
Category B **Trees of moderate quality** with an estimated remaining life expectancy of at least 20 years	Trees that might be included in category A, but are downgraded because of impaired condition (e.g. presence of significant though remediable defects, including unsympathetic past management and storm damage), such that they are unlikely to be suitable for retention for beyond 40 years; or trees lacking the special quality necessary to merit the category A designation	Trees present in numbers, usually growing as groups or woodlands, such that they attract a higher collective rating than they might as individuals; or trees occurring as collectives but situated so as to make little visual contribution to the wider locality	Trees with material conservation or other cultural value	See Table 2
Category C **Trees of low quality** with an estimated remaining life expectancy of at least 10 years, or young trees with a stem diameter below 150 mm	Unremarkable trees of very limited merit or such impaired condition that they do not qualify in higher categories	Trees present in groups or woodlands, but without this conferring on them significantly greater collective landscape value; and/or trees offering low or only temporary/transient landscape benefits	Trees with no material conservation or other cultural value	See Table 2

© The British Standards Institution 2012

Appendix Two

Preliminary Tree Constraints Plan

© Tree Solutions Ltd (2014)

Legend

Root Protection Area Modified to Account for Site Features

Category
Crown Spread
Tree Number
Root Protection Area

Tree Position Approximate (not shown on original survey)

- Category A (High Quality)
- Category B (Moderate Quality)
- Category C (Low Quality)
- Category U (Dead/Dying/In Decline)

Client:
Wales & West Housing

Project:
Land off Wheatsheaf Lane/Second Avenue, Gwersyllt, Wrexham

Title:
Tree Constraints Plan

Scale:	Date:
1:200 @ A1	September 2014
Drawn By:	Revision:
LI & AM	A
Job Ref:	Drawing No:
14/AIA/WXM/152	01

Do not scale from this drawing all dimensions to be checked on site.

The copyright of this document resides with Tree Solutions unless assigned in writing by the company

Tree Solutions
E: info@tree-solutions.co.uk
W: www.tree-solutions.co.uk
T: 01244 389114
M: 07766 774508

N

5m 10m

Appendix Three

Impact Assessment Plan

© Tree Solutions Ltd (2014)

Legend

Root Protection Area Modified to Account for Site Features

Category
Crown Spread
Tree Number
Root Protection Area

Tree Position Approximate (not shown on original survey)

Tree Proposed for Removal

- Category A (High Quality)
- Category B (Moderate Quality)
- Category C (Low Quality)
- Category U (Dead/Dying/In Decline)

Client: Wales & West Housing	
Project: Land off Wheatsheaf Lane/Second Avenue, Gwersyllt, Wrexham	
Title: Arboricultural Impact Assessment	
Scale: 1:200 @ A1	Date: September 2014
Drawn By: LI & AM	Revision: A
Job Ref: 14/AIA/WXM/152	Drawing No: 02

Do not scale from this drawing all dimensions to be checked on site.

The copyright of this document resides with Tree Solutions unless assigned in writing by the company

Tree Solutions
E: info@tree-solutions.co.uk
W: www.tree-solutions.co.uk
T: 01244 389114
M: 07766 774508

N

5m 10m

Appendix Four

Tree Protection Plan

© Tree Solutions Ltd (2014)

existing trees within public open spaces

2,4m x 1,8m timber apex shed for storage of 2no cycles and 1m² of garden tools. Shed to be set on concrete foundation with secure fixings provided. Shed door to have a secure entrance lock

1 no. 220L compost bin per dwelling (exact details to be agreed with local authority)

rear gardens to have a minimum area of 40m² and a maximum 1:8 fall towards the dwelling

access and visibility 1700x1400mm level surface to provide access to wheelie bins

1 no. 200L water butt per dwelling with stand, tap, diverter and child proof lid. Butt to be supplied in green with a black diverter, suitable for down pipe.

min 3m x 3m level patio area

external rotary airer/drying space to the rear of each dwelling (6m min drying space). Refer to WWH specification table for exact details.

1 no. 55L green recycling box & 2 no. 70L wheelie bins per dwelling (exact details to be agreed with local authority)

drop kerbs to be provided at driveway locations

line of metal fencing to boundary nom. 1200mm high

distance from neighbouring property to side elevation of proposed to be minimum 13m, as per Wrexham council planning requirements

carport to be provided over disabled parking bay, exact details to be agreed

all dwellings to have 1.2m wide level access to front door

existing trees within public open space

red line indicates site boundary

- 2 no parking spaces to be provided to each semi-detached dwelling measuring 2.4x4.8m,
- 1 no space per dwelling is to be capable of being increased to 3.3x4.8m,
- all parking spaces are to be min 2m from any window

proposed turning head to accomodate refuge vehicles requirements

approximate line of redundant railway

street lighting to be provided within development exact details are to be agreed with highways

landscaped areas to be provided as indicated - exact details are to be agreed

proposed vehicle calming measures to be provided at entrance to the site

Figure 2 **Default specification for protective barrier**

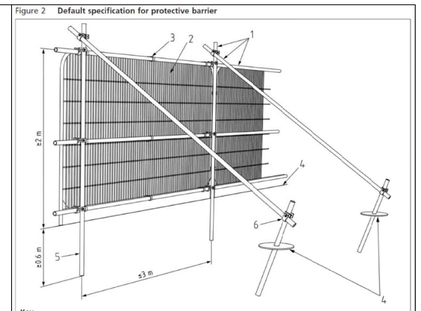

Key

1. Standard scaffold poles
2. Heavy gauge 2 m tall galvanized tube and welded mesh infill panels
3. Panels secured to uprights and cross-members with wire ties
4. Ground level
5. Uprights driven into the ground until secure (minimum depth 0.6 m)
6. Standard scaffold clamps

Legend

Root Protection Area Modified to Account for Site Features

Tree Position Approximate (not shown on original survey)

Tree Protection Fencing

- Category A (High Quality)
- Category B (Moderate Quality)
- Category C (Low Quality)
- Category U (Dead/Dying/In Decline)

Client: Wales & West Housing	
Project: Land off Wheatsheaf Lane/Second Avenue, Gwersyllt, Wrexham	
Title: Tree Protection Plan	
Scale: 1:200 @ A1	Date: September 2014
Drawn By: LI & AM	Revision: A
Job Ref: 14/AIA/WXM/152	Drawing No: 03

Do not scale from this drawing all dimensions to be checked on site.

The copyright of this document resides with Tree Solutions unless assigned in writing by the company

Tree Solutions
E: info@tree-solutions.co.uk
W: www.tree-solutions.co.uk
T: 01244 389114
M: 07766 774508

N
W E
S

5m 10m

Appendix Five

Tree Protective Measures/Method Statement

© Tree Solutions Ltd (2014)

SEQUENCE OF OPERATIONS

From commencement of the above development, the following methodology shall be implemented in the manner and sequence described:

1. Tree Surgery Works
2. Erect temporary protective fencing
3. Main construction phase
4. Removal of temporary fencing
5. Landscaping within RPA's

1. Tree Surgery Works

1. Before the erection of the temporary protective fencing, all tree removal shall be implemented in accordance with the Tree Survey Schedule at ***Appendix* 1**
2. All possible efforts must be made to prevent damage to retained trees including potential root incursion or compaction caused by vehicle access.
3. All arboricultural works shall conform to the recommendations of BS 3998 (2010) 'Recommendations for Tree Work'
4. All operatives shall be equipped with and use personal protective equipment (PPE) in accordance with current Health & Safety Executive current directives and industry codes of practice.
5. Performance of all arboricultural operations and use of equipment shall be in accordance with current Health & Safety Executive current directives and industry codes of practice

2. Temporary Tree Protective Fencing Erection

1. Following completion of the tree felling and prior to commencement of any site demolition, construction, preparation, excavation or material deliveries the main contractor shall erect the temporary protective fencing as detailed in the 'Tree Protection Specification' and in the location indicated on the Tree Protection Plan.

3. Main Construction Phase

1. There shall be no storage of construction material, site parking, site accommodation or equipment in any area designated as the Root Protection Area (RPA) and Construction Exclusion Zone (CEZ) and enclosed by Temporary Protective Fencing
2. No materials that are likely to have an adverse effect on tree health such as oil, bitumen or cement will be stored or discharged within 10 metres of the trunk of a tree that is to be retained. No fires will be lit.
3. The site agent shall supervise deliveries by self-loading crane, with vehicles positioned in such a manner that retained trees are not at risk of damage.

Avoiding Damage to Stems and Branches

4. Care shall be taken when planning site operations in proximity to trees to ensure that wide or tall loads or plant with booms, jibs and counterweights can operate without coming into contact with retained trees. Such contact can result in serious injury resulting in safe retention impossible.

On Site Storage of Spoil and Building Materials

5. Prior to and during all site construction works no spoil will be stored within the crown spread on any tree on or adjacent to the site even if proposed site work is to be within the crown spread. Any encroachment within this protected area will only be with the prior agreement of the LPA Arboricultural Officer.

4. Remove all Temporary Tree Protective Fencing

1. Tree Protective fencing will only be removed upon completion of all construction work and upon written consent from the LPA..

 © Tree Solutions Ltd (2014)

5. Landscaping within the RPA of trees

1. Landscaping works will be implemented in accordance with a scheme approved by the LPA
2. There shall be **no rotovation** of ground within any area designated as a Root Protection Area (RPA) and Construction Exclusion Zone (CEZ) and enclosed by Temporary Protective Fencing.
3. No hard landscaping works or excavation for cables or any other service should be installed within the Root Protection Area (RPA) and Construction Exclusion Zone (CEZ) without the written consent of the LPA.

6. ARBORICULTURAL SITE SUPERVISION

1 The erection of all tree protection measures outlined in this AMS and as indicated on the Tree Protection Plan will be inspected by the contract Arboricultural Consultant immediately after erection. Photographic evidence of the location and specification of all protective fencing will be forwarded to the LPA Tree Officer upon completion.

2 All proposed work within any designated RPA will be overseen by contract Arboricultural Consultant with photographic records taken and signed inspection report emailed direct to the LPA for approval

3 The contract Arboricultural Consultant to make visits to site to inspect all tree protection measures during all key development work within close proximity to retained trees

Useful Contacts

Arboricultural Consultant

Name: Alistair Henderson (Tree Solutions Ltd)
Tel: 01244 389114
Mobile: 07766 774508
Email: alistair@tree-solutions.co.uk

LPA Arboricultural Officer

Name: Moray Simpson
Tel: 01978 298763
Email: moray.simpson@wrexham.gov.uk

TREE PROTECTIVE FENCING

1 Before the commencement of any demolition and subsequent construction works on site (other than those set out in the schedule of tree works contained in this document), protective fencing will be erected as detailed on the Tree Protection Plan and as specified below. The LPA Tree Officer will be given 5 days notice upon completion of the fencing in order to inspect and approve prior to the commencement of any site works.

2 The fencing will consist of a scaffold framework in accordance with Figure 2 of BS 5837 – 2012 (illustration below) comprising a metal framework, both vertical and horizontal, well braced to resist impacts. Vertical tubes will be spaced at a maximum interval of 3m. Onto this, weldmesh panels shall be securely fixed with wire or scaffold clamps. Weldmesh panels on rubber or concrete feet are not considered resistant to impact and for this reason will not be used. The site manager or other suitably qualified appointed person will be responsible for inspecting the protective fencing on a daily basis; any damage to the fencing or breaches of the fenced area will be rectified immediately.

3 Clearly legible weatherproof signage, stating “Protected Trees – Exclusion Zone” shall be attached to the fencing 1.5m from the ground, facing out of the Tree Protection Zone located at regular intervals along the fence line.

4 The fencing will remain in place until completion of all site works and then only removed when all site traffic is removed from site.

5 Other than works detailed within this method statement or approved in writing by the Local Planning Authority (LPA), no works including storage or dumping of materials shall take place within the exclusion zones defined by the protective fencing.

© Tree Solutions Ltd (2014)

Protective Fencing Detail

1. Magenta Trees

Figure 2 **Default specification for protective barrier**

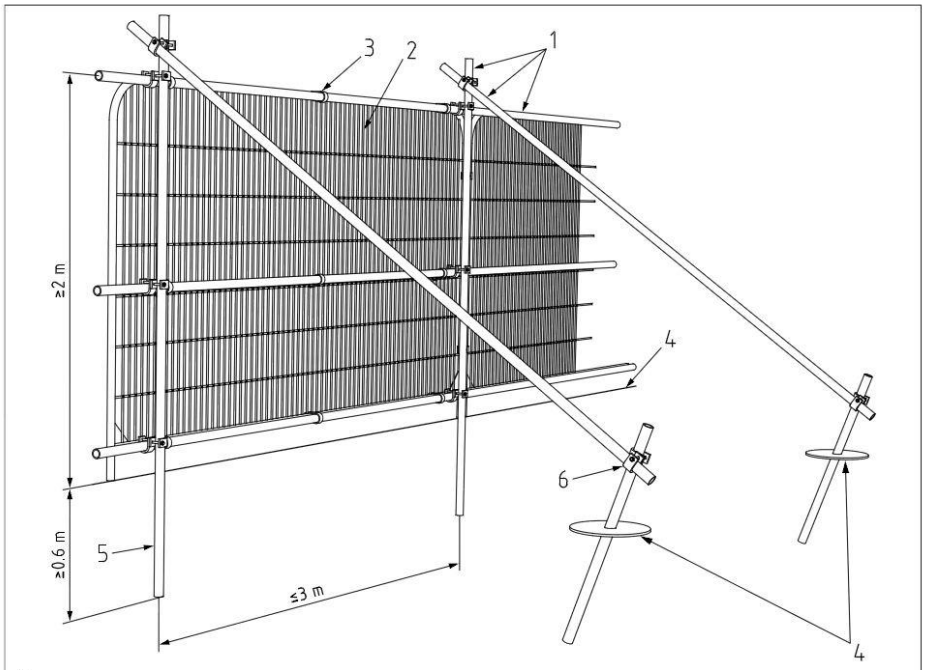

Key

1 Standard scaffold poles
2 Heavy gauge 2 m tall galvanized tube and welded mesh infill panels
3 Panels secured to uprights and cross-members with wire ties
4 Ground level
5 Uprights driven into the ground until secure (minimum depth 0.6 m)
6 Standard scaffold clamps

© Tree Solutions Ltd (2014)