Appendix IV- Tree protective Fence detail.

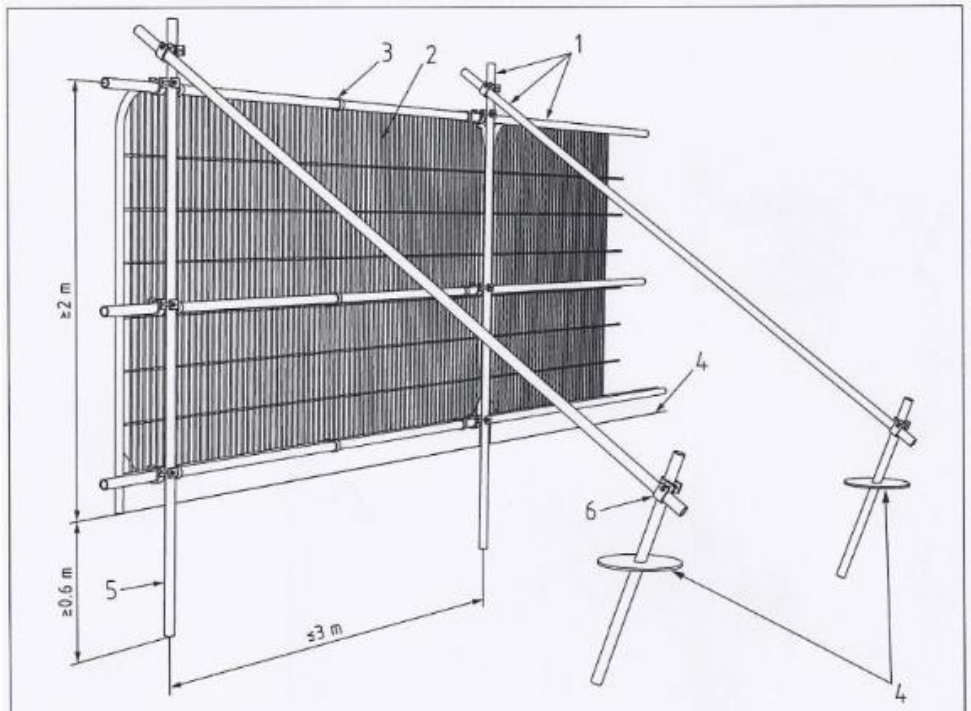

Key

1 Standard scaffold poles

2 Heavy gauge 2 m tall galvanized tube and welded mesh infill panels

3 Panels secured to uprights and cross-members with wire ties

4 Ground level

5 Uprights driven into the ground until secure (minimum depth 0.6 m)

6 Standard scaffold clamps

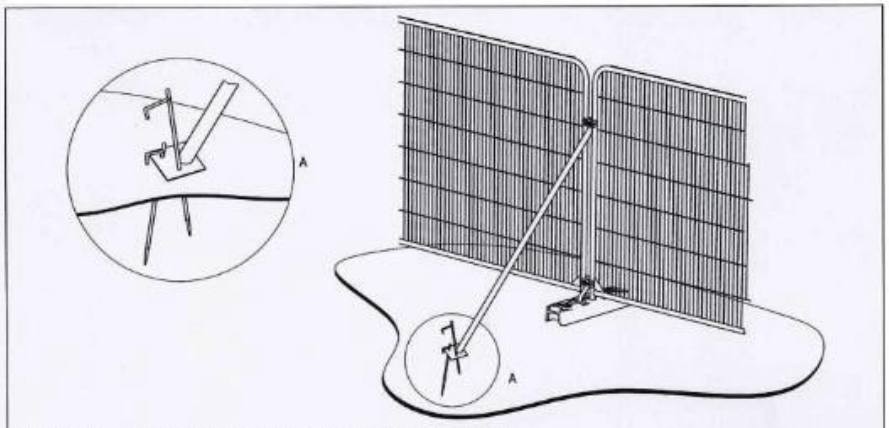

a) Stabilizer strut with base plate secured with ground pins

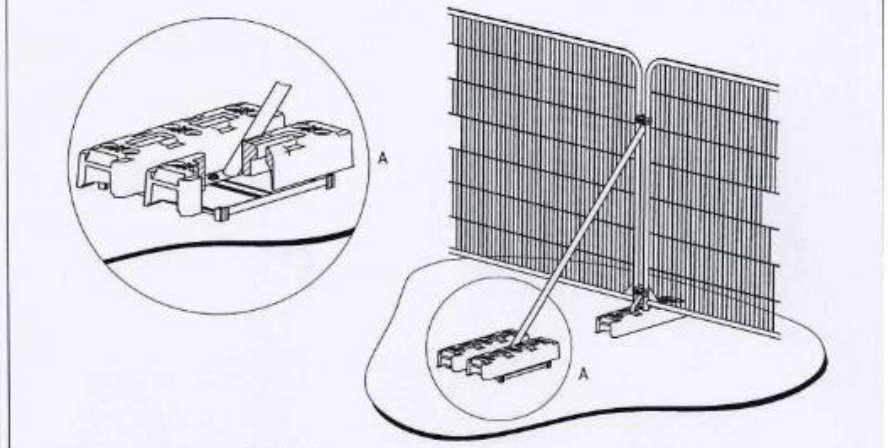

b) Stabilizer strut mounted on block tray