APG - FIVE FORD'S
PORTAL FRAME

IF IN DOUBT-ASK

LENGTH: 7400mm
DEPTH: 3320mm
HEIGHT: 3200mm TO 3000mm

2X ROLLER DOOR - 2500mm W x 2100mm H
2X PERSONAL DOORS - 1010mm W x 2100mm H

STEEL:

LEGS - 203x102x23 UB
RAFTERS - 178x102x19 UB
ROLLER DOOR HEADER & LEGS - 152x152x30 UB
PERSONAL DOOR LEGS - 150x75x18 PFC

CLADDING:

32mm BOX PROFILE

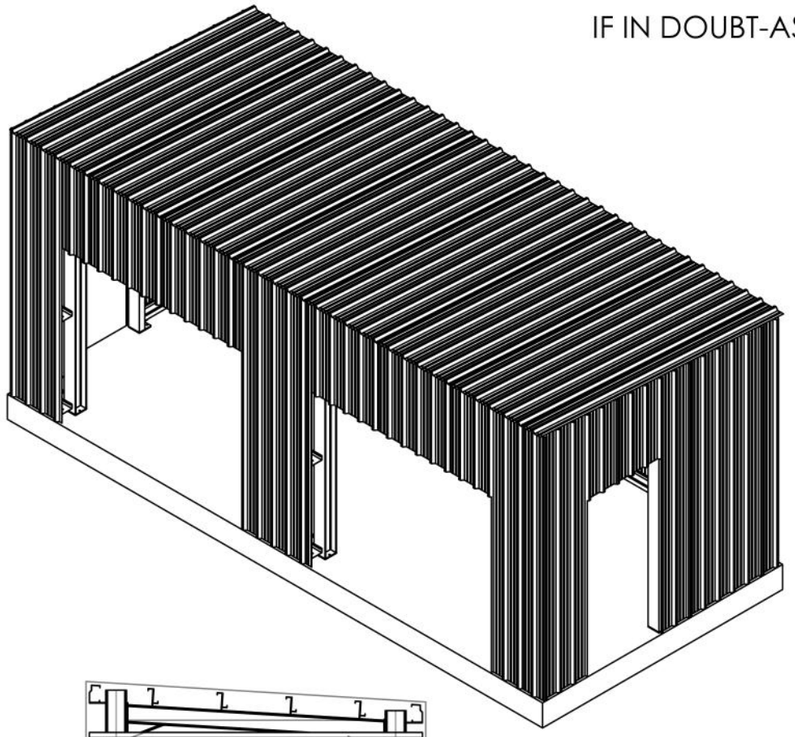

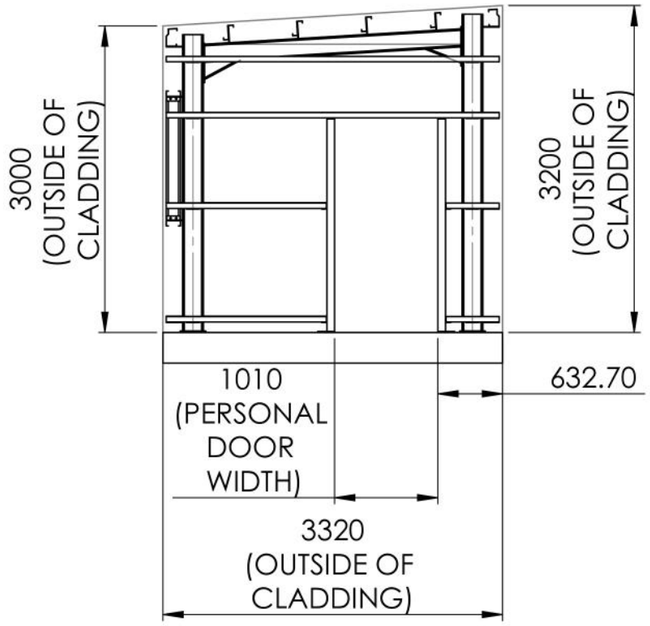

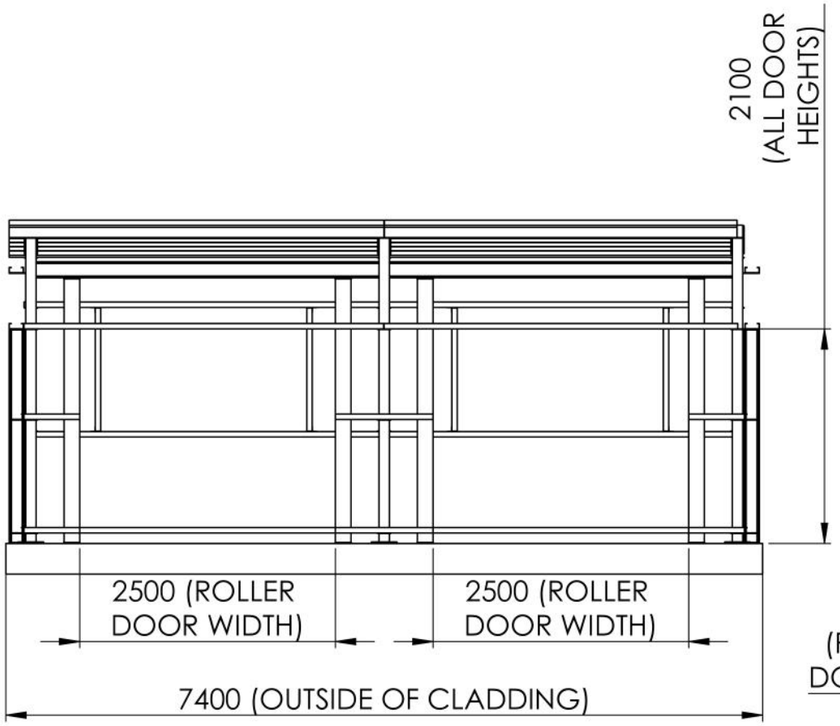

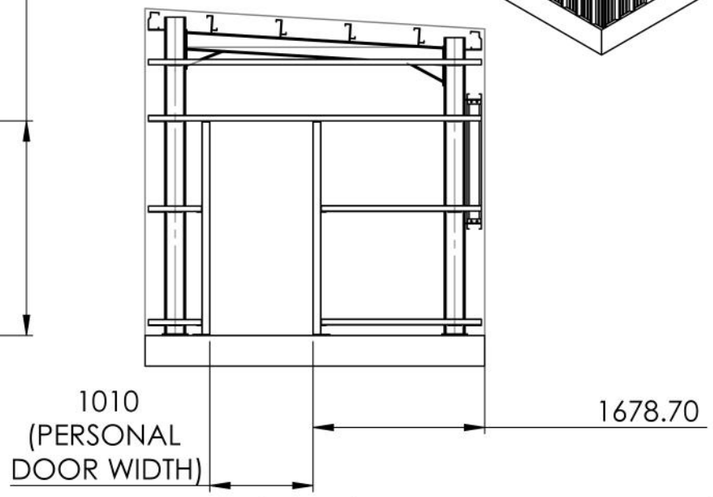

REV	DESCRIPTION	REV BY	REV DATE

	NAME	DATE
MODELED BY	BF	22/02/21
DRAWN BY	BF	22/02/21
APPROVED BY		
FABRICATED BY		

CUSTOMER: APG
REV: d2
PO & PRODUCT: Portal Frame
DESCRIPTION: GA Drawing
DRAWING NO: APG-Five Ford's - GA Drawing

UNLESS OTHERWISE SPECIFIED:
DIMENSIONS ARE IN MILLIMETERS
MATERIAL:
DO NOT SCALE DRAWING
FINISH:
SCALE: 1:60
SHEET OF
A3

odoni elwell
consult • design • manufacture • install

IF IN DOUBT-ASK

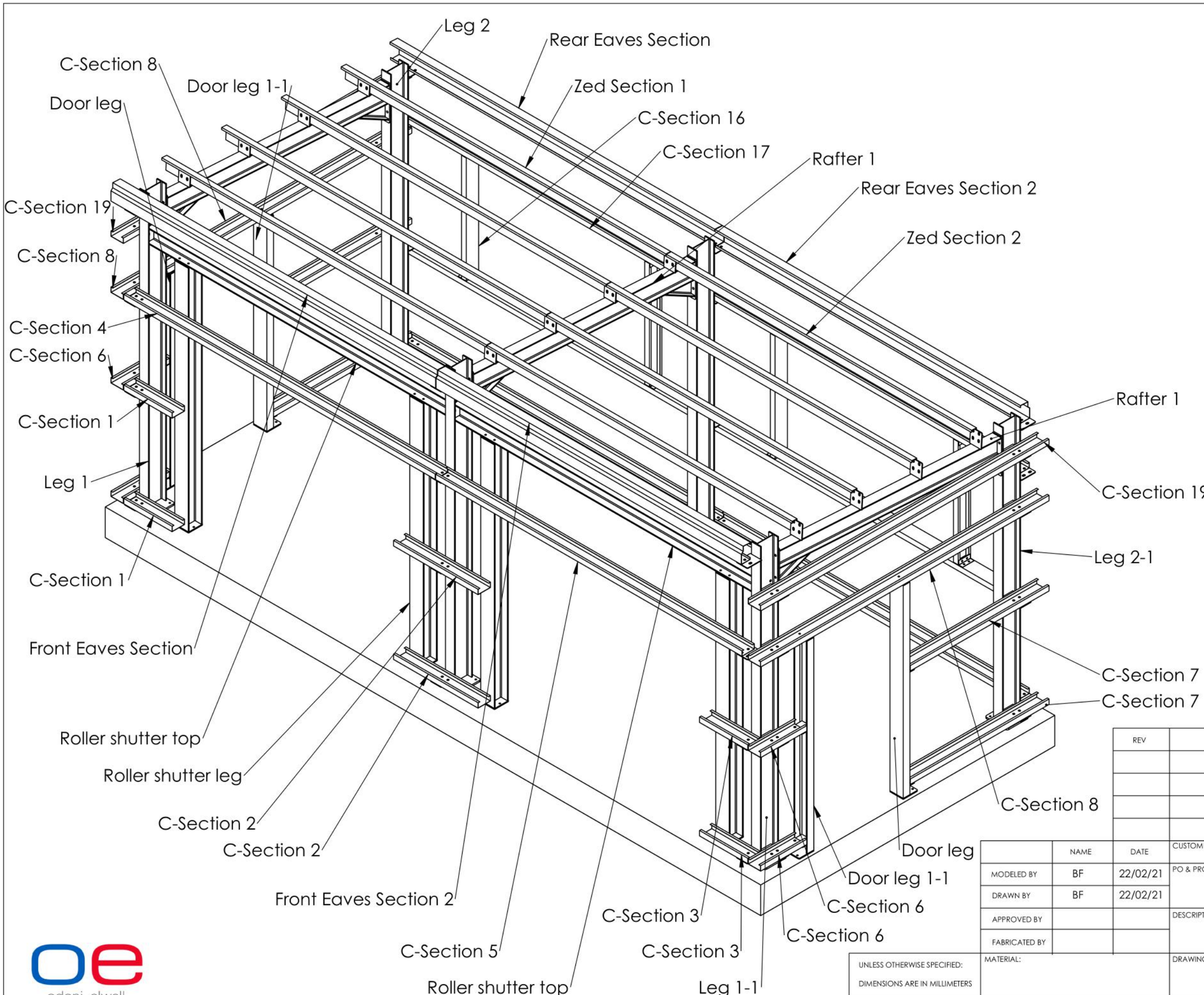

REV	DESCRIPTION	REV BY	REV DATE

	NAME	DATE
MODELED BY	BF	22/02/21
DRAWN BY	BF	22/02/21
APPROVED BY		
FABRICATED BY		

CUSTOMER: APG

REV: d2

PO & PRODUCT: Portal Frame

DESCRIPTION: GA Drawing

UNLESS OTHERWISE SPECIFIED: DIMENSIONS ARE IN MILLIMETERS

MATERIAL:

DRAWING NO: APG-Five Ford's - GA Drawing

DO NOT SCALE DRAWING

FINISH:

SCALE: 1:30

SHEET OF

A3

odoni elwell

consult • design • manufacture • install

IF IN DOUBT-ASK

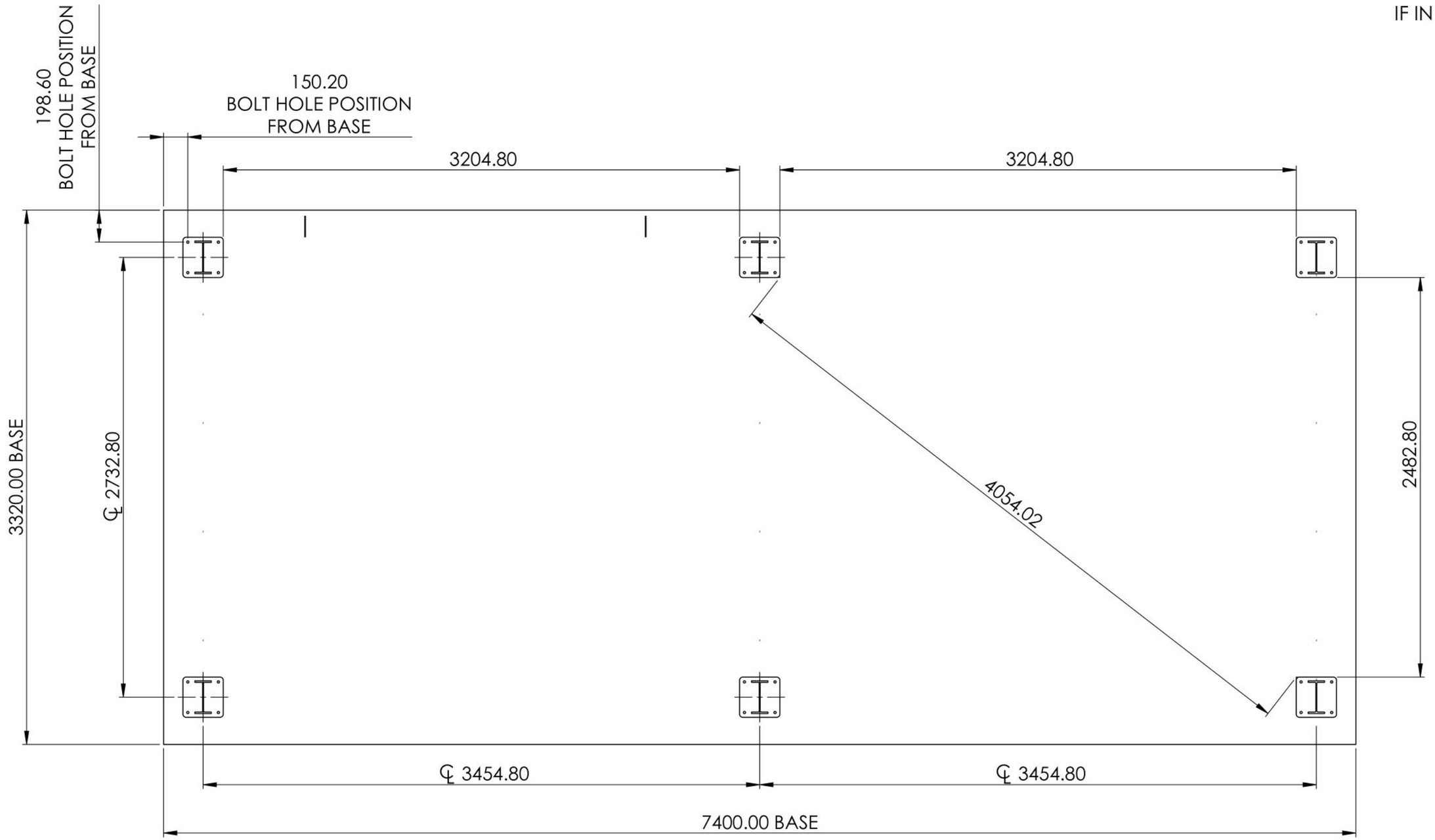

	NAME	DATE		
MODELED BY	BF	22/02/21	CUSTOMER: APG	REV: d2
DRAWN BY	BF	22/02/21	PO & PRODUCT: Portal Frame	
CHECKED BY			DESCRIPTION: GA Drawing	
APPROVED BY				
UNLESS OTHERWISE SPECIFIED: DIMENSIONS ARE IN MILLIMETERS	MATERIAL:		DRAWING NO: APG-Five Ford's - GA Drawing	
DO NOT SCALE DRAWING	FINISH:		SCALE: 1:25	SHEET OF A3

odoni elwell
consult • design • manufacture • install

IF IN DOUBT-ASK

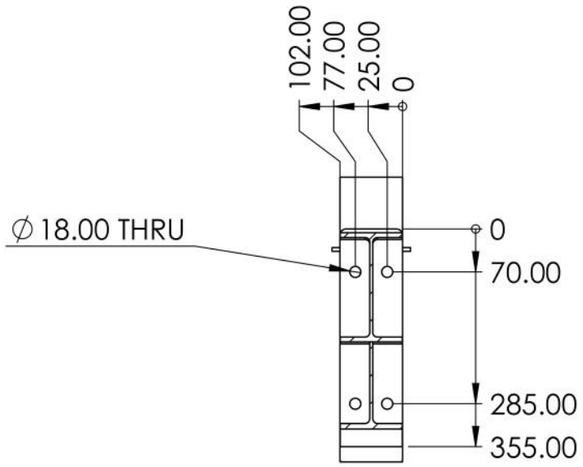

SECTION B-B
SCALE 1 : 10

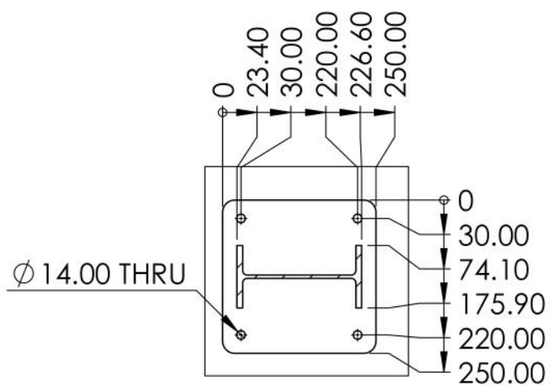

SECTION A-A
SCALE 1 : 10

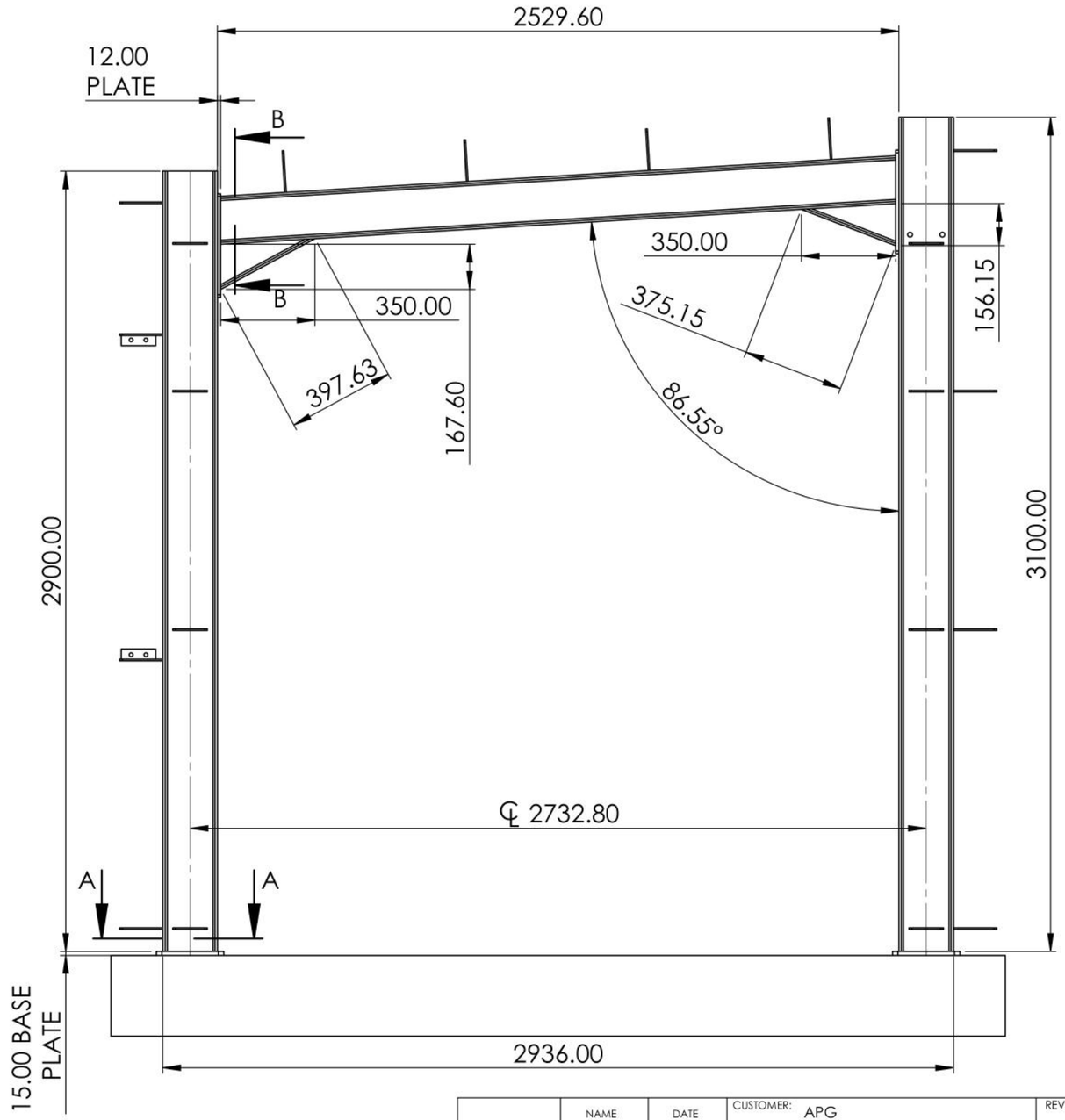

BOLTS TO USE:

- M12x100mm THROUGH BOLTS FOR BASE PLATES
- M16x50mm FOR RAFTERS TO LEGS

odoni elwell
consult • design • manufacture • install

	NAME	DATE		
MODELED BY	BF	22/02/21	CUSTOMER: APG	REV: d2
DRAWN BY	BF	22/02/21	PO & PRODUCT: Portal Frame	
CHECKED BY			DESCRIPTION: GA Drawing	
APPROVED BY				
UNLESS OTHERWISE SPECIFIED: DIMENSIONS ARE IN MILLIMETERS	MATERIAL:		DRAWING NO: APG-Five Ford's - GA Drawing	
DO NOT SCALE DRAWING	FINISH:		SCALE: 1:20	SHEET OF A3

ITEM NO.	PART NUMBER	DESCRIPTION	QTY.	LENGTH
2	Leg 1		1	
2.1		203x102x23 UB	1	3100
2.2		250x250x15mm Base Plate	1	15
2.3		128x160x6mm	3	6
2.4		170mm Eaves Cleat	1	6
2.5		Side C-Section Cleat	4	6

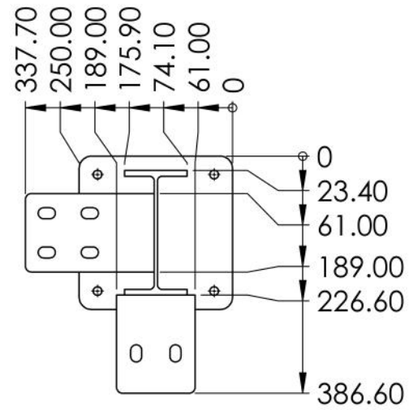

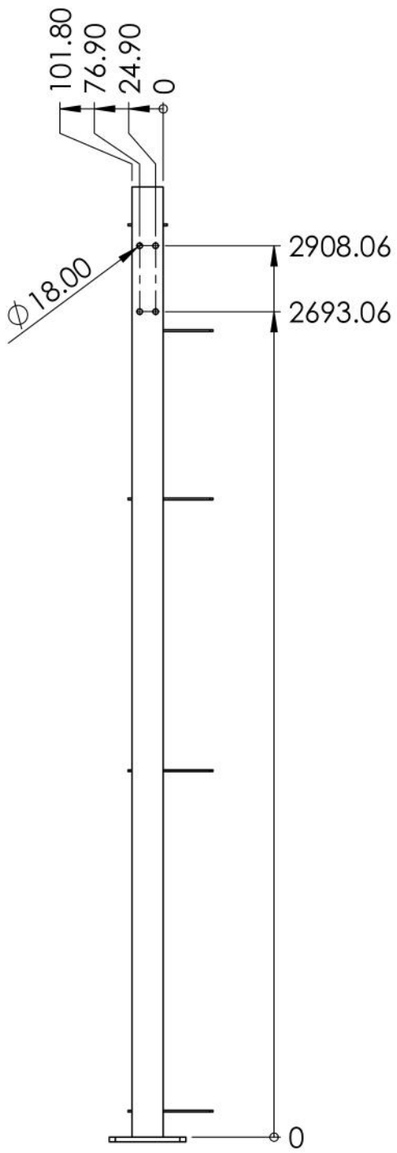

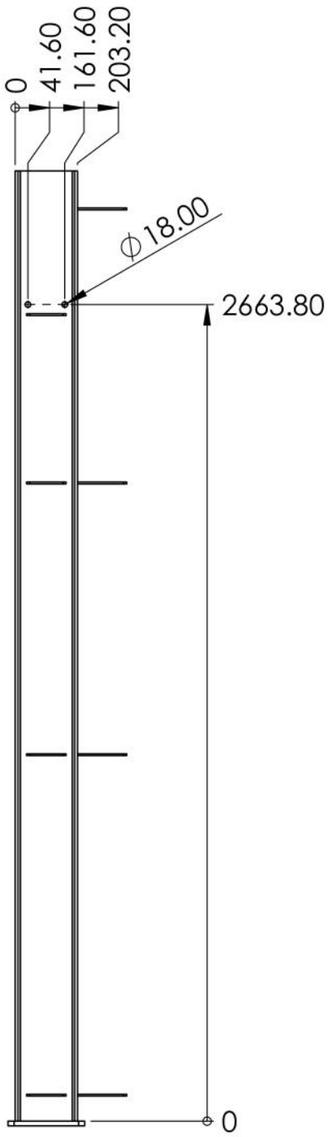

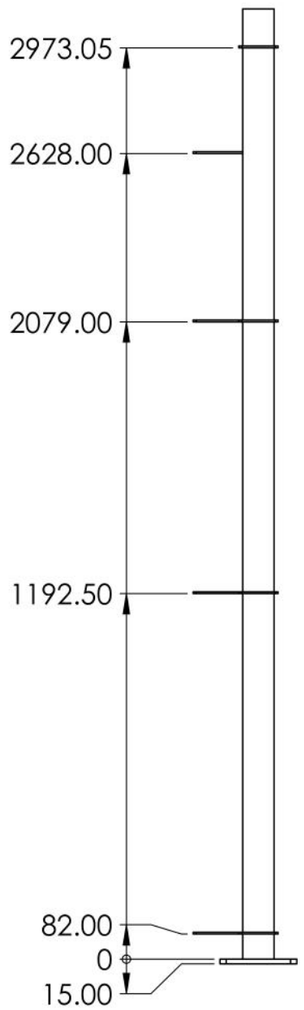

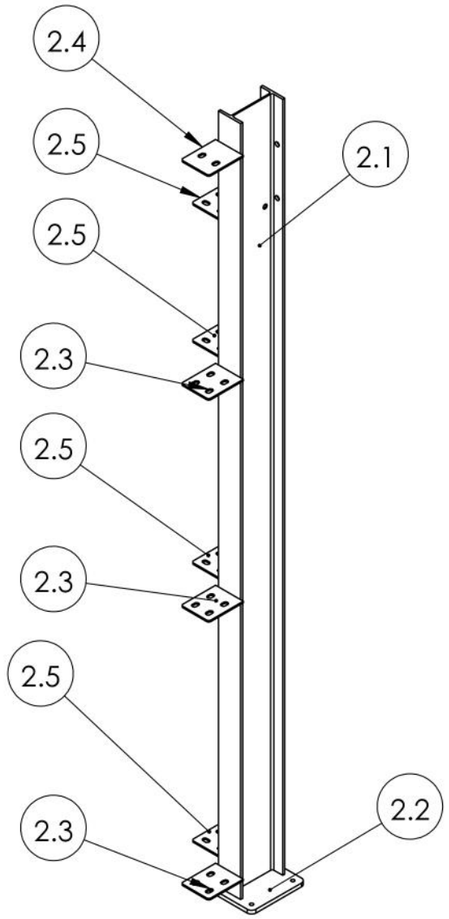

IF IN DOUBT-ASK

	NAME	DATE
MODELED BY	BF	22/02/21
DRAWN BY	BF	29/03/21
CHECKED BY	AH	09/04/21
APPROVED BY	SJ	09/04/21

CUSTOMER: APG

REV: d2

PO & PRODUCT: Portal Frame

DESCRIPTION:

UNLESS OTHERWISE SPECIFIED:
DIMENSIONS ARE IN MILLIMETERS

MATERIAL:

DRAWING NO: Leg 1

DO NOT SCALE DRAWING

FINISH:

SCALE: 1:20

SHEET OF

A3

odoni elwell
consult • design • manufacture • install

ITEM NO.	PART NUMBER	DESCRIPTION	QTY.	LENGTH
3	Leg 2		1	
3.1		203x102x23 UB	1	2900
3.2		250x250x15mm Base Plate	1	15
3.3		128x160x6mm	3	6
3.4		170mm Eaves Cleat	1	6
3.5		Side C-Section Cleat	4	6

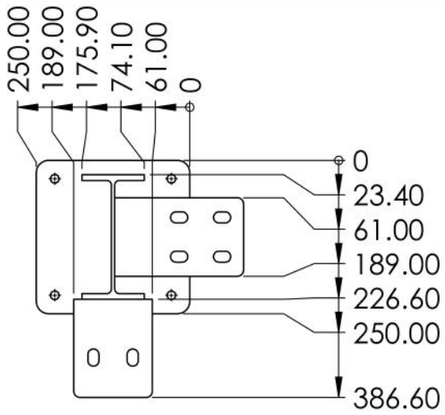

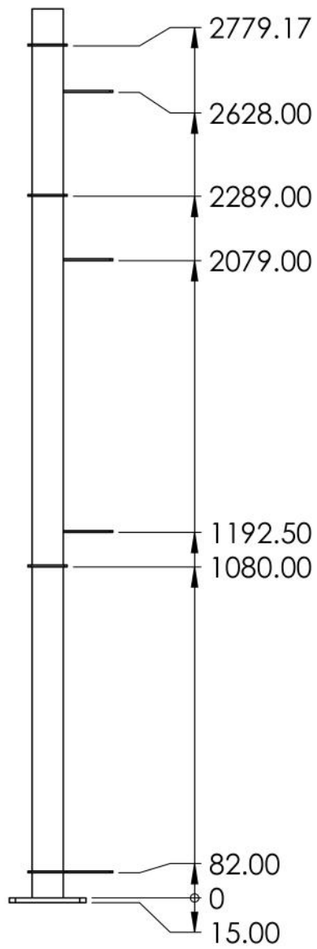

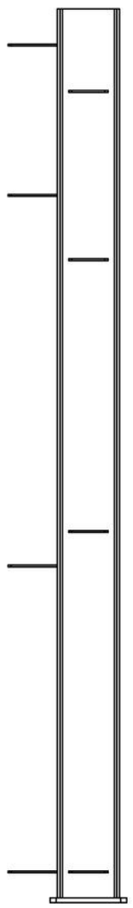

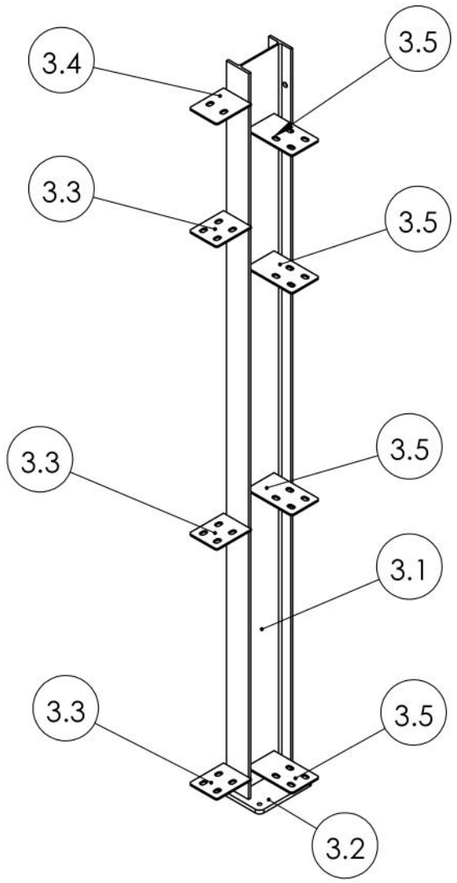

IF IN DOUBT-ASK

	NAME	DATE	CUSTOMER: APG	REV: d2
MODELED BY	BF	22/02/21	PO & PRODUCT: Portal Frame	
DRAWN BY	BF	29/03/21		
CHECKED BY	AH	09/04/21	DESCRIPTION:	
APPROVED BY	SJ	09/04/21		

UNLESS OTHERWISE SPECIFIED: DIMENSIONS ARE IN MILLIMETERS	MATERIAL:	DRAWING NO: Leg 2		
DO NOT SCALE DRAWING	FINISH:	SCALE: 1:20	SHEET OF	A3

odoni elwell
consult • design • manufacture • install

ITEM NO.	PART NUMBER	DESCRIPTION	QTY.	LENGTH
4	Leg 3		1	
4.1		203x102x23 UB	1	3100
4.2		250x250x15mm Base Plate	1	15
4.3		170mm Eaves Cleat	1	6
4.4		128x160x6mm	3	6

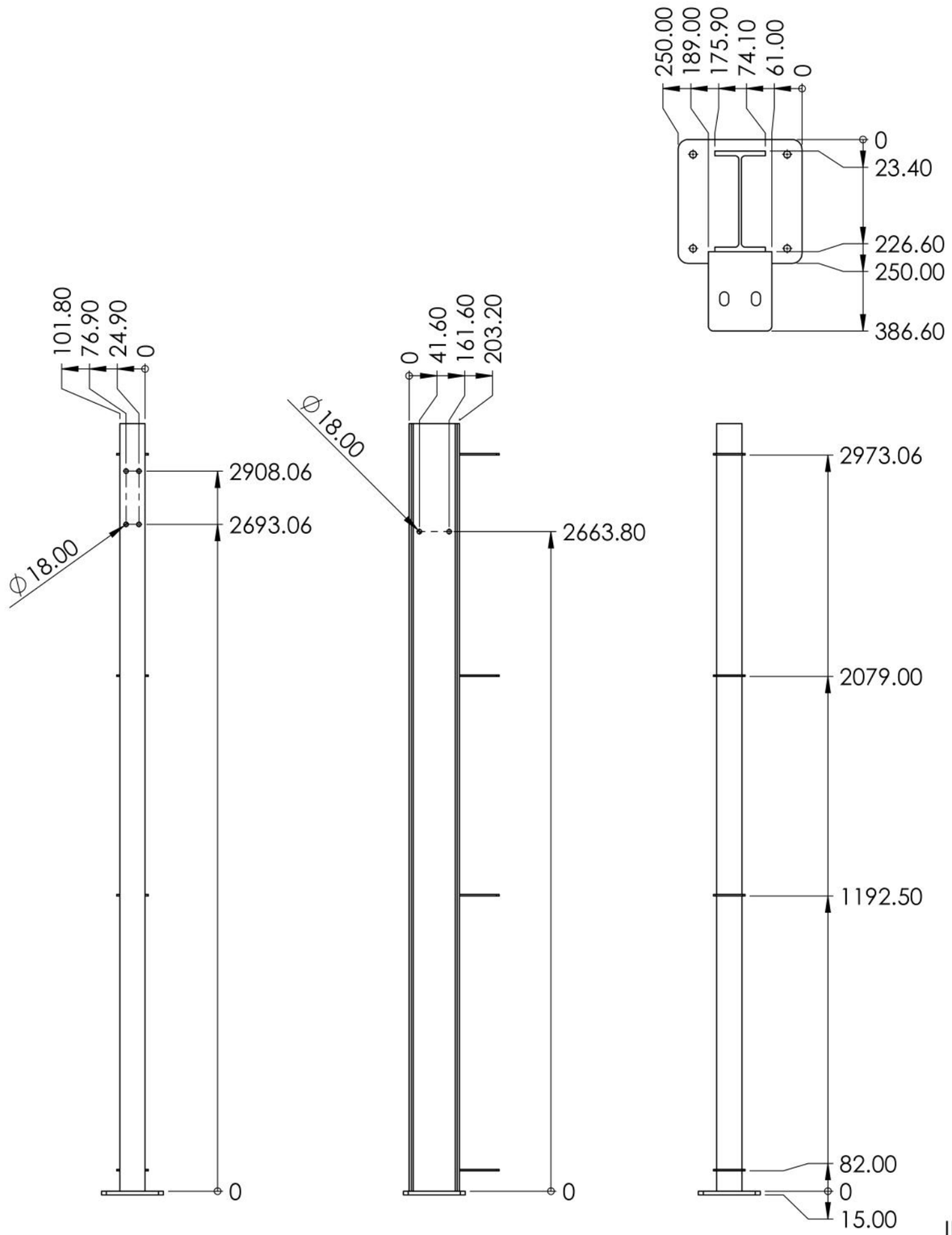

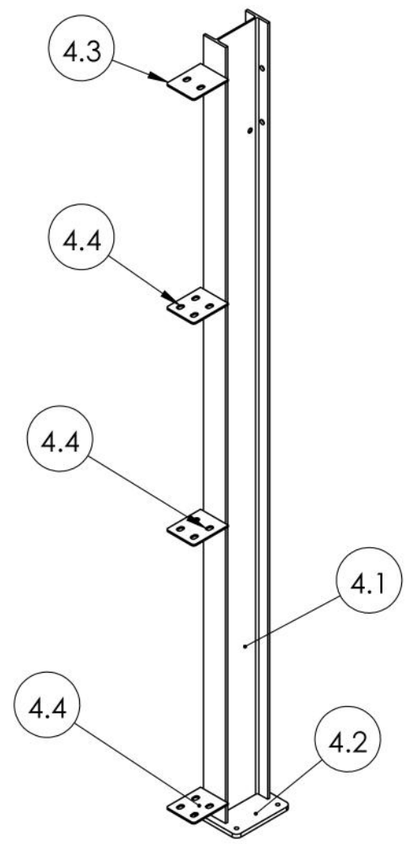

IF IN DOUBT-ASK

	NAME	DATE	CUSTOMER: APG	REV: d2
MODELED BY	BF	22/02/21	PO & PRODUCT: Portal Frame	
DRAWN BY	BF	29/03/21		
CHECKED BY	AH	09/04/21	DESCRIPTION:	
APPROVED BY	SJ	09/04/21		

UNLESS OTHERWISE SPECIFIED: DIMENSIONS ARE IN MILLIMETERS	MATERIAL:	DRAWING NO: Leg 3	
DO NOT SCALE DRAWING	FINISH:	SCALE: 1:20	SHEET OF	A3

odoni elwell
consult • design • manufacture • install

ITEM NO.	PART NUMBER	DESCRIPTION	QTY.	LENGTH
5	Leg 4		1	
5.1		203x102x23 UB	1	2900
5.2		250x250x15mm Base Plate	1	15
5.3		170mm Eaves Cleat	1	6
5.4		128x160x6mm	3	6

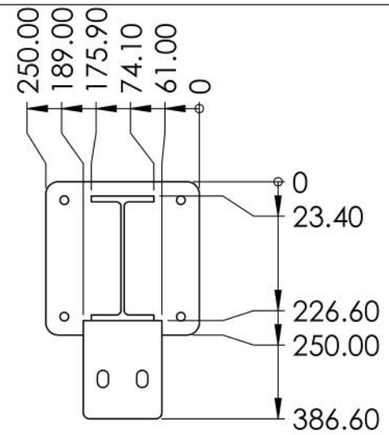

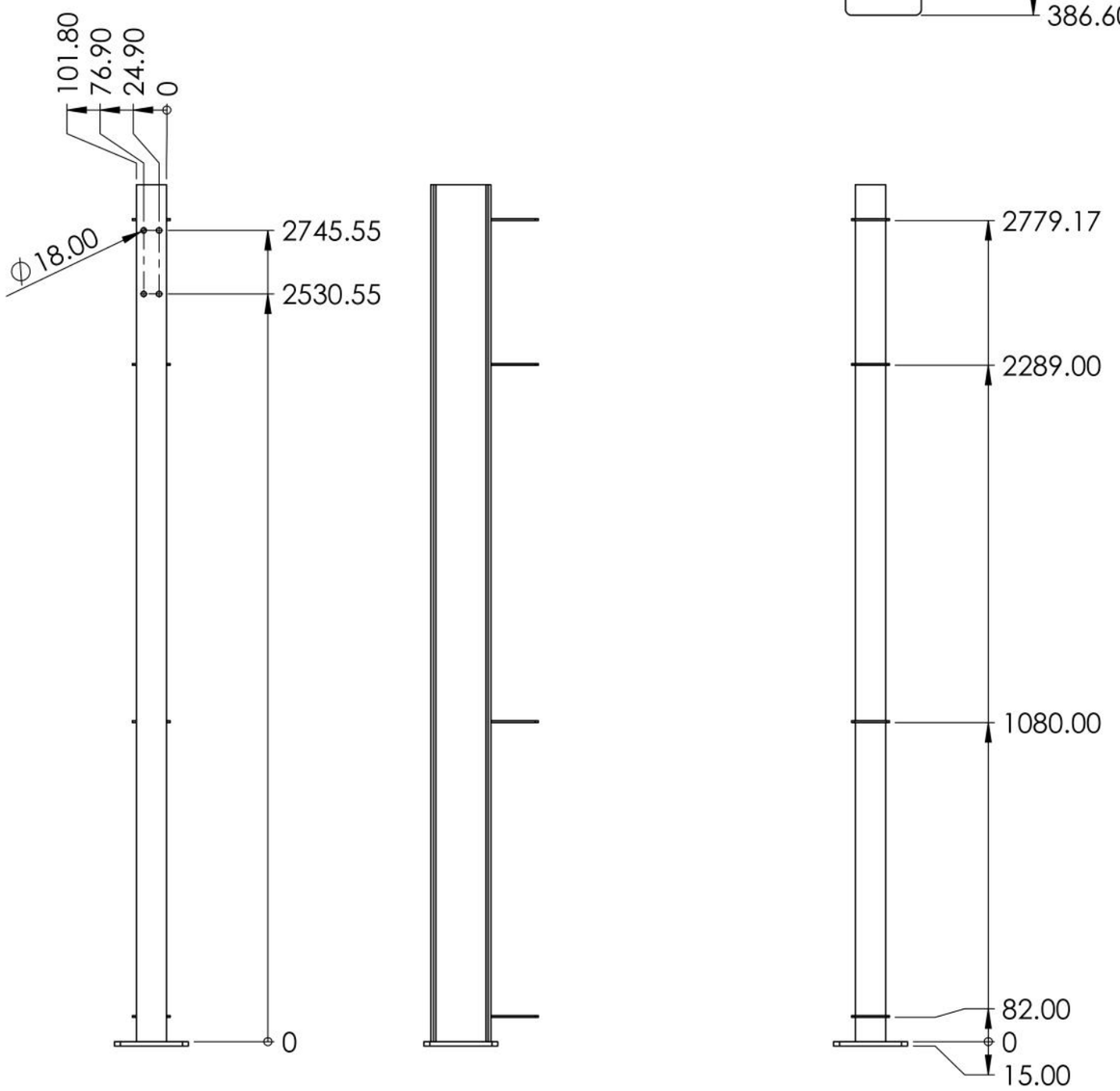

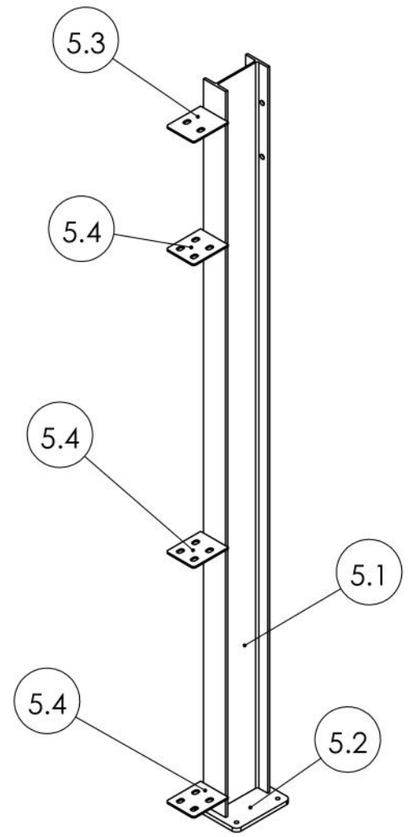

IF IN DOUBT-ASK

	NAME	DATE
MODELED BY	BF	22/02/21
DRAWN BY	BF	29/03/21
CHECKED BY	AH	09/04/21
APPROVED BY	SJ	09/04/21

CUSTOMER: APG

REV: d2

PO & PRODUCT: Portal Frame

DESCRIPTION:

UNLESS OTHERWISE SPECIFIED:
DIMENSIONS ARE IN MILLIMETERS

MATERIAL:

DRAWING NO: Leg 4

DO NOT SCALE DRAWING

FINISH:

SCALE: 1:20

SHEET OF

A3

odoni elwell
consult • design • manufacture • install

ITEM NO.	PART NUMBER	DESCRIPTION	QTY.	LENGTH
6	Leg 1-1		1	
6.1		203x102x23 UB	1	3100
6.2		250x250x15mm Base Plate	1	15
6.3		128x160x6mm	3	6
6.4		170mm Eaves Cleat	1	6
6.5		Side C-Section Cleat	4	6

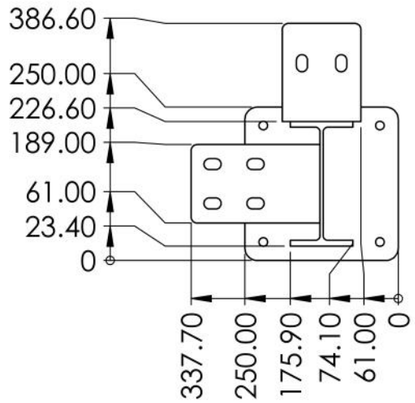

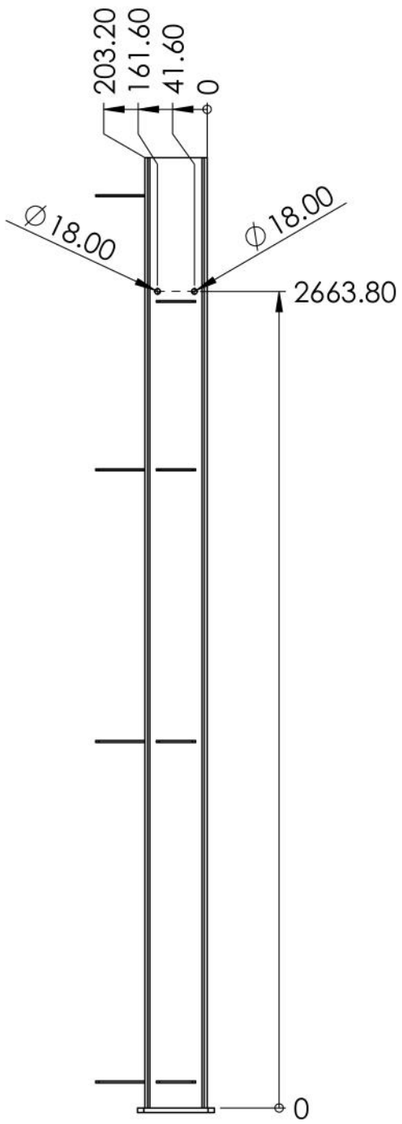

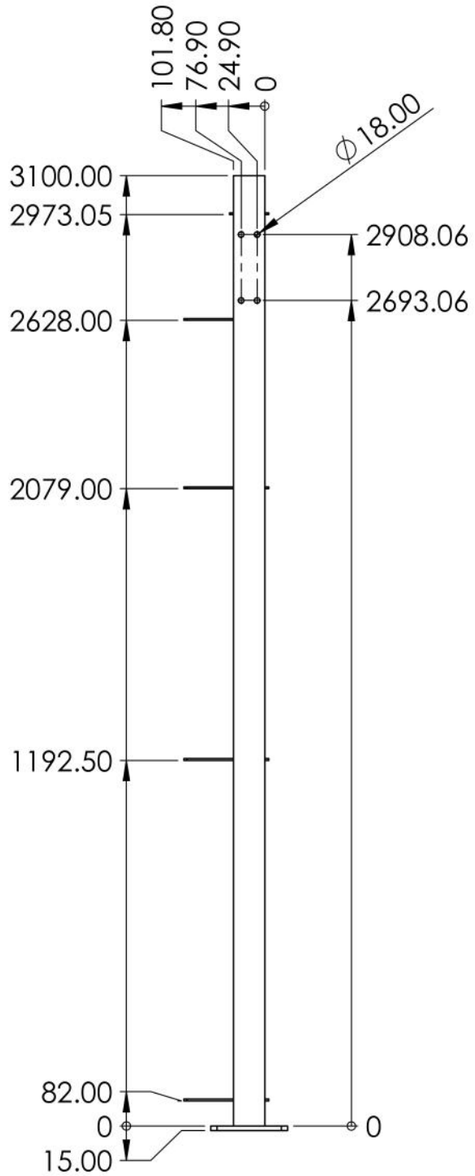

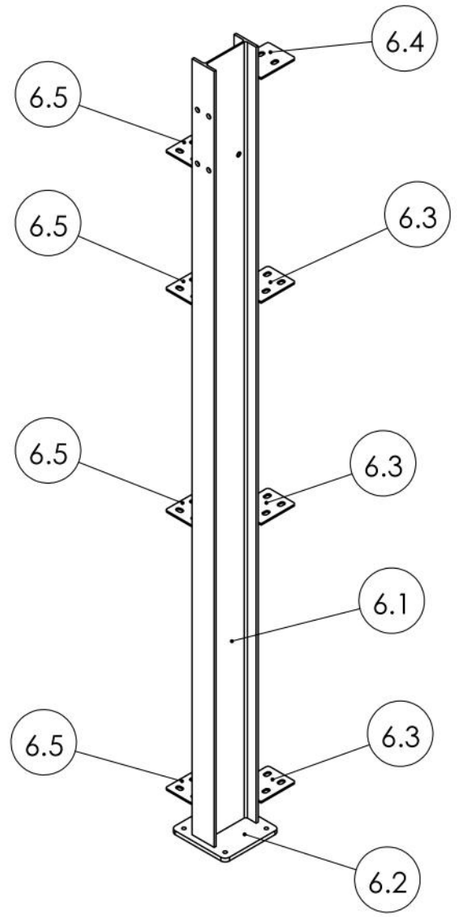

IF IN DOUBT-ASK

	NAME	DATE
MODELED BY	BF	22/02/21
DRAWN BY	BF	29/03/21
CHECKED BY	AH	09/04/21
APPROVED BY	SJ	09/04/21

CUSTOMER: APG

REV: d2

PO & PRODUCT: Portal Frame

DESCRIPTION:

UNLESS OTHERWISE SPECIFIED: DIMENSIONS ARE IN MILLIMETERS

MATERIAL:

DRAWING NO: Leg 1-1

DO NOT SCALE DRAWING

FINISH:

SCALE: 1:20

SHEET OF

A3

odoni elwell

consult • design • manufacture • install

ITEM NO.	PART NUMBER	DESCRIPTION	QTY.	LENGTH
7	Leg 2-1		1	
7.1		203x102x23 UB	1	2900
7.2		250x250x15mm Base Plate	1	15
7.3		128x160x6mm	3	6
7.4		170mm Eaves Cleat	1	6
7.5		Side C-Section Cleat	4	6

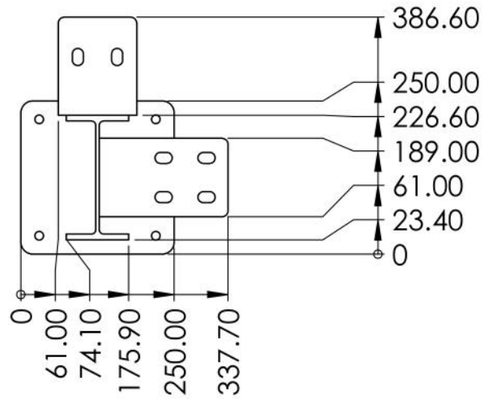

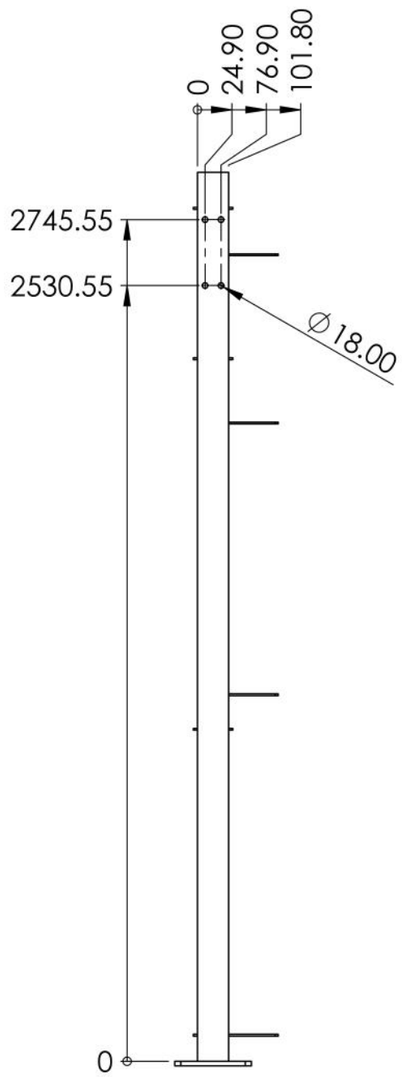

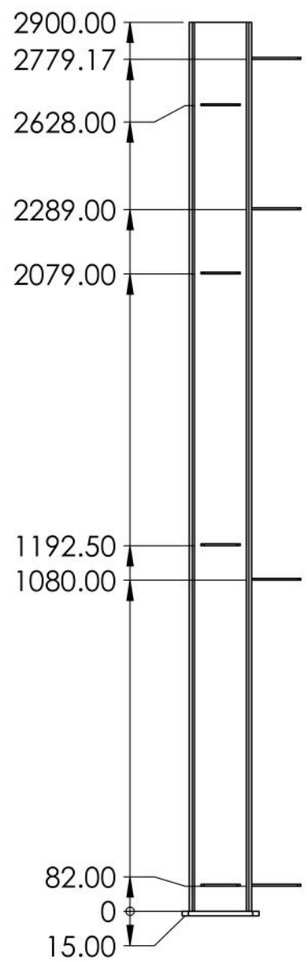

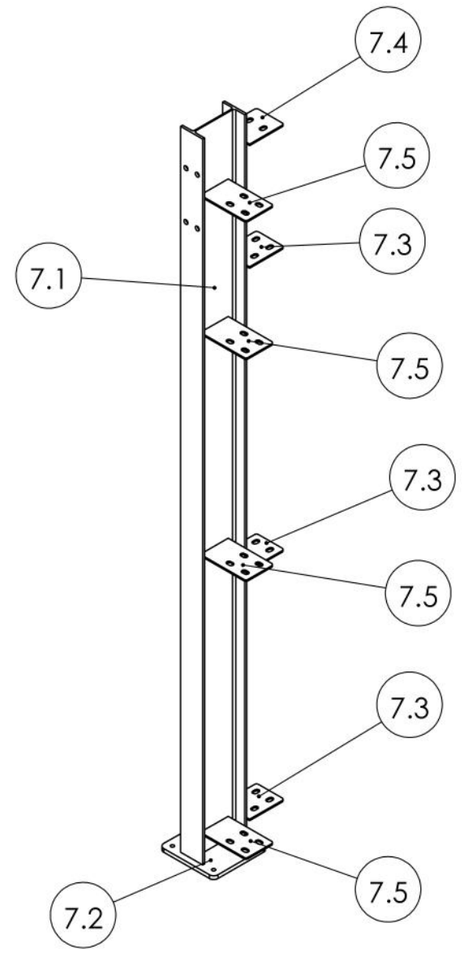

IF IN DOUBT-ASK

	NAME	DATE
MODELED BY	BF	22/02/21
DRAWN BY	BF	29/03/21
CHECKED BY	AH	09/04/21
APPROVED BY	SJ	09/04/21

CUSTOMER: APG

REV: d2

PO & PRODUCT: Portal Frame

DESCRIPTION:

UNLESS OTHERWISE SPECIFIED:
DIMENSIONS ARE IN MILLIMETERS

MATERIAL:

DRAWING NO: Leg 2-1

DO NOT SCALE DRAWING

FINISH:

SCALE: 1:20

SHEET OF

A3

odoni elwell
consult • design • manufacture • install

ITEM NO.	PART NUMBER	DESCRIPTION	QTY.	LENGTH
8	Door leg		2	
8.1		150x75x18mm Channel	1	2080
8.2		Door Base Plate 2	1	10
8.3		Top Door Cleat	1	10
8.4		Door Cleat	2	6

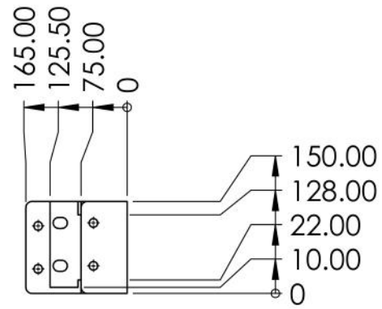

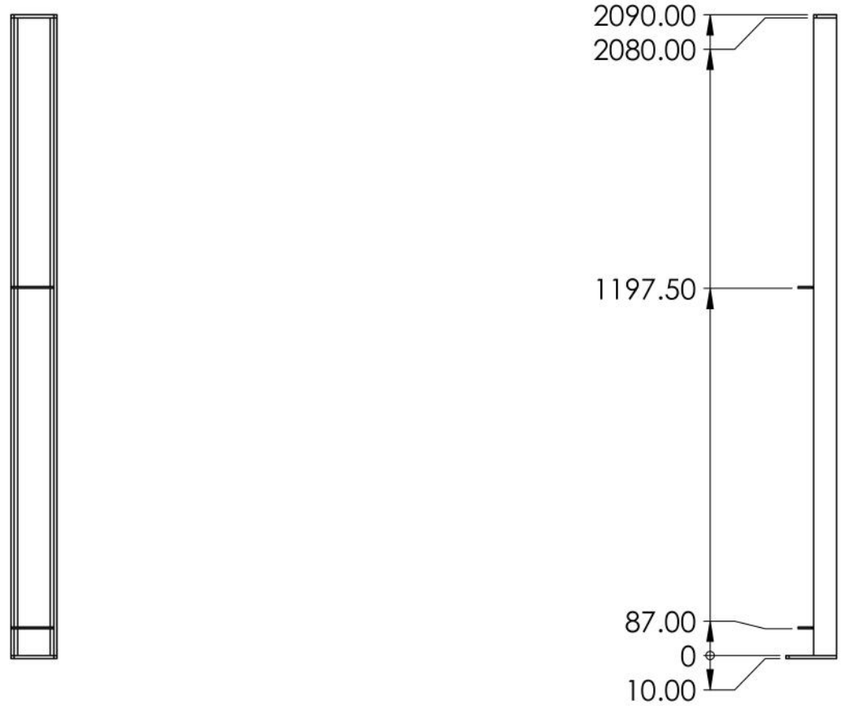

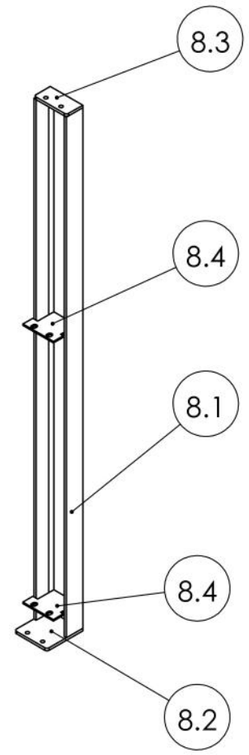

IF IN DOUBT-ASK

	NAME	DATE	CUSTOMER: APG	REV: d2
MODELED BY	BF	22/02/21	PO & PRODUCT: Portal Frame	
DRAWN BY	BF	29/03/21		
CHECKED BY	AH	09/04/21	DESCRIPTION:	
APPROVED BY	SJ	09/04/21		
UNLESS OTHERWISE SPECIFIED: DIMENSIONS ARE IN MILLIMETERS	MATERIAL:		DRAWING NO: Door Leg	
DO NOT SCALE DRAWING	FINISH:		SCALE: 1:20	SHEET OF / A3

odoni elwell
consult • design • manufacture • install

ITEM NO.	PART NUMBER	DESCRIPTION	QTY.	LENGTH
9	Door leg 1-1		2	
9.1		150x75x18mm Channel	1	2080
9.2		Door Base Plate 2	1	10
9.3		Top Door Cleat	1	10
9.4		Door Cleat	2	6

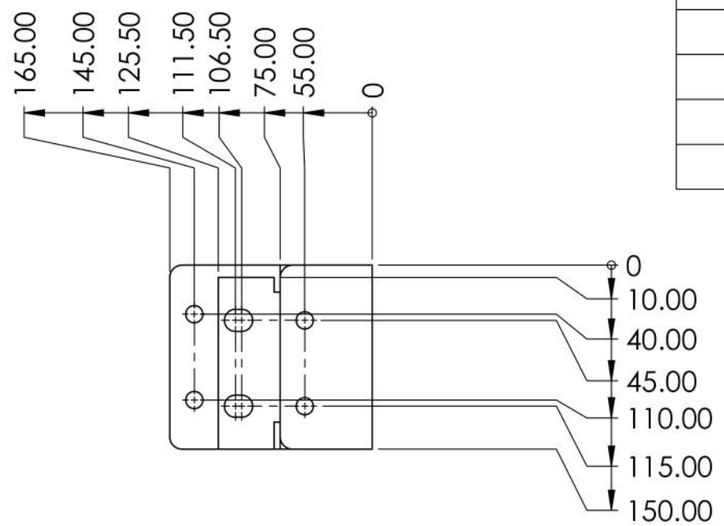

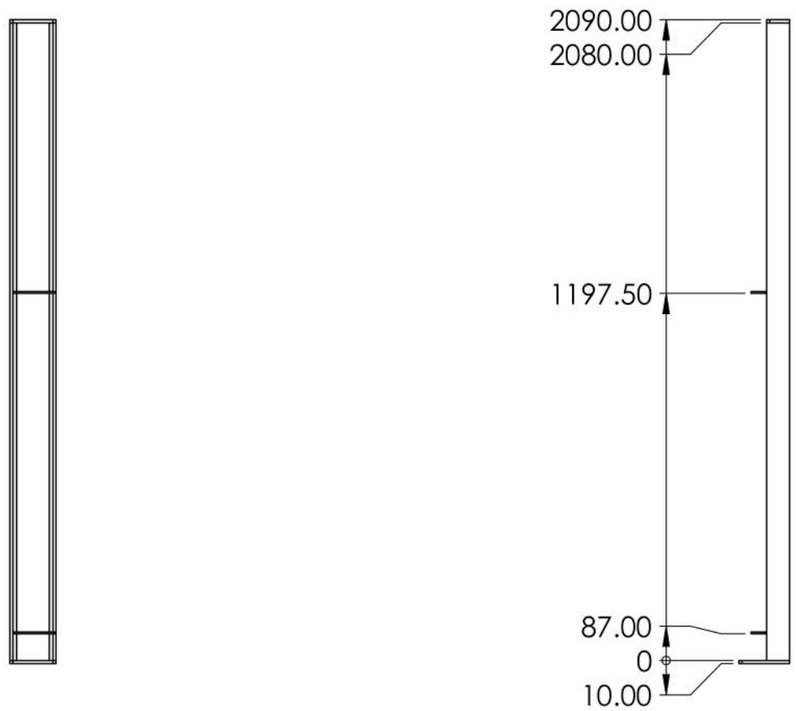

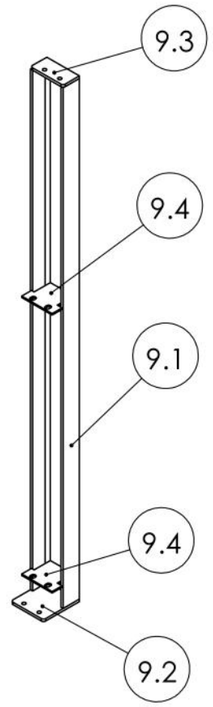

IF IN DOUBT-ASK

	NAME	DATE		
MODELED BY	BF	22/02/21	CUSTOMER: APG	REV: d2
DRAWN BY	BF	29/03/21	PO & PRODUCT: Portal Frame	
CHECKED BY	AH	09/04/21	DESCRIPTION:	
APPROVED BY	SJ	09/04/21		

UNLESS OTHERWISE SPECIFIED: DIMENSIONS ARE IN MILLIMETERS	MATERIAL:	DRAWING NO: Door Leg 1-1	
DO NOT SCALE DRAWING	FINISH:	SCALE: 1:20	SHEET OF	A3

odoni elwell
consult • design • manufacture • install

ITEM NO.	PART NUMBER	DESCRIPTION	QTY.	LENGTH
10	C-Section 1	140mm C Section	2	
10.1		140mm C-Section	1	545

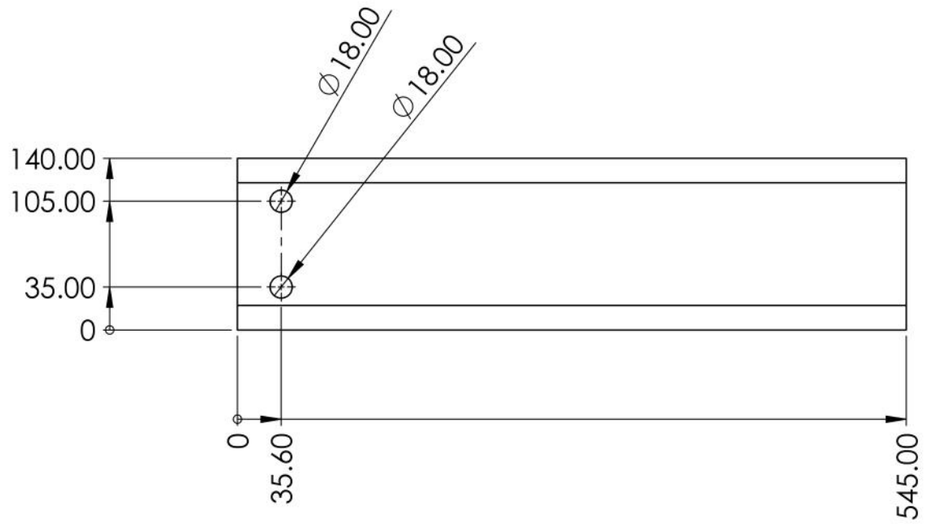

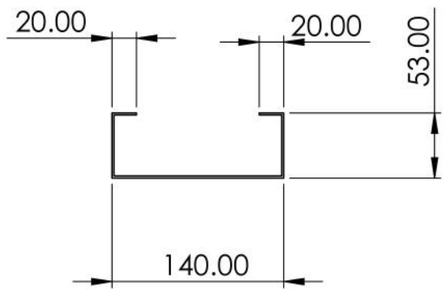

IF IN DOUBT-ASK

	NAME	DATE
MODELED BY	BF	22/02/21
DRAWN BY	BF	29/03/21
CHECKED BY	AH	09/04/21
APPROVED BY	SJ	09/04/21

CUSTOMER: APG

REV: d2

PO & PRODUCT: Portal Frame

DESCRIPTION:

UNLESS OTHERWISE SPECIFIED:
DIMENSIONS ARE IN MILLIMETERS

MATERIAL:

DRAWING NO: C-Section 1

DO NOT SCALE DRAWING

FINISH:

SCALE: 1:5

SHEET OF

A3

odoni elwell
consult • design • manufacture • install

ITEM NO.	PART NUMBER	DESCRIPTION	QTY.	LENGTH
11	C-Section 2	140mm C Section	2	
11.1		140mm C-Section	1	954

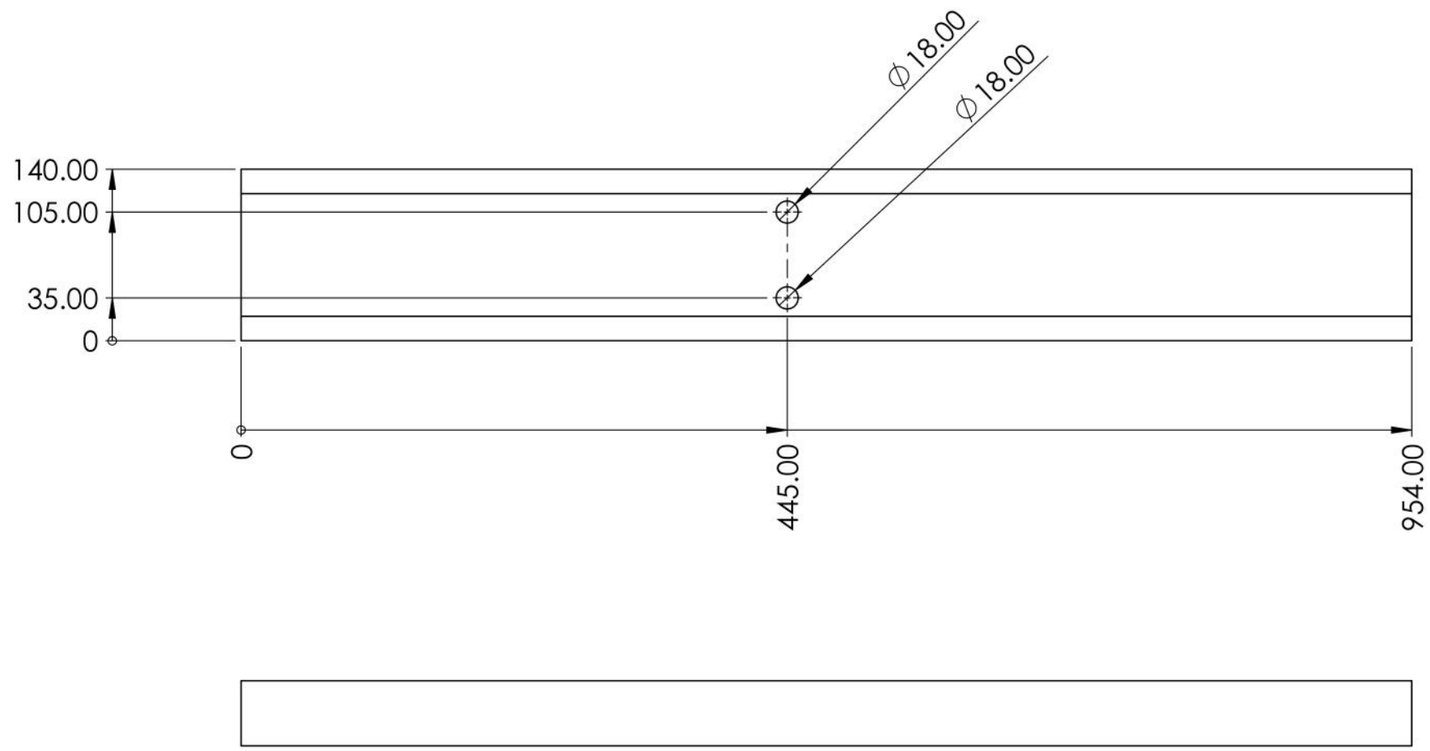

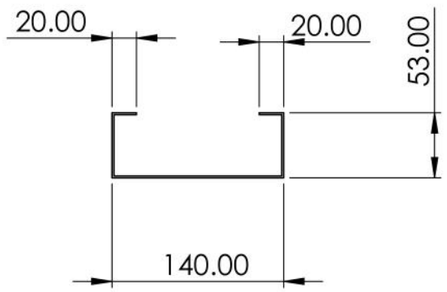

	NAME	DATE
MODELED BY	BF	22/02/21
DRAWN BY	BF	29/03/21
CHECKED BY	AH	09/04/21
APPROVED BY	SJ	09/04/21

IF IN DOUBT-ASK

CUSTOMER: APG

REV: d2

PO & PRODUCT: Portal Frame

DESCRIPTION:

UNLESS OTHERWISE SPECIFIED:
DIMENSIONS ARE IN MILLIMETERS

MATERIAL:

DRAWING NO: C-Section 2

DO NOT SCALE DRAWING

FINISH:

SCALE: 1:5

SHEET OF

A3

odoni elwell
consult • design • manufacture • install

ITEM NO.	PART NUMBER	DESCRIPTION	QTY.	LENGTH
12	C-Section 3	140mm C Section	2	
12.1		140mm C-Section	1	545.1

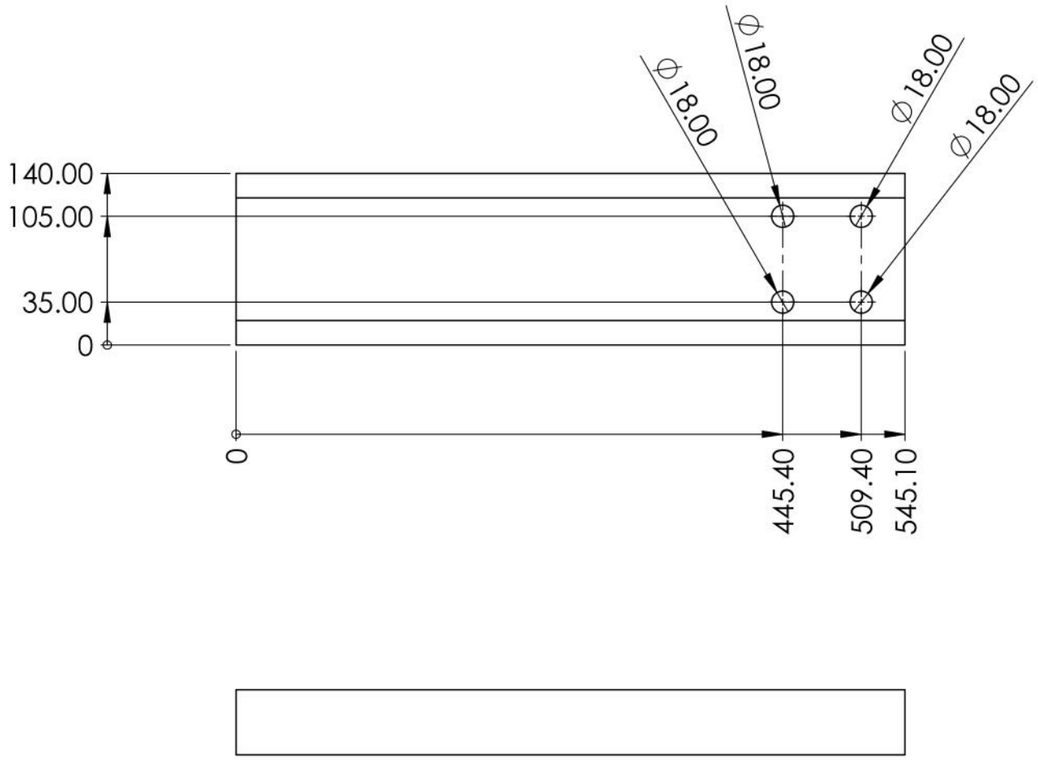

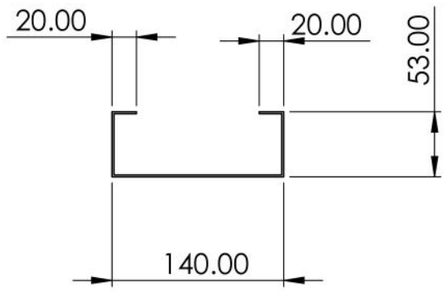

	NAME	DATE		
MODELED BY	BF	22/02/21	CUSTOMER: APG	REV: d2
DRAWN BY	BF	29/03/21	PO & PRODUCT: Portal Frame	
CHECKED BY	AH	09/04/21	DESCRIPTION:	
APPROVED BY	SJ	09/04/21		

IF IN DOUBT-ASK

UNLESS OTHERWISE SPECIFIED: DIMENSIONS ARE IN MILLIMETERS	MATERIAL:	DRAWING NO: C-Section 3	
DO NOT SCALE DRAWING	FINISH:	SCALE: 1:5	SHEET OF	A3

odoni elwell
consult • design • manufacture • install

ITEM NO.	PART NUMBER	DESCRIPTION	QTY.	LENGTH
13	C-Section 4	140mm C Section	2	
13.1		140mm C-Section	1	3515.5

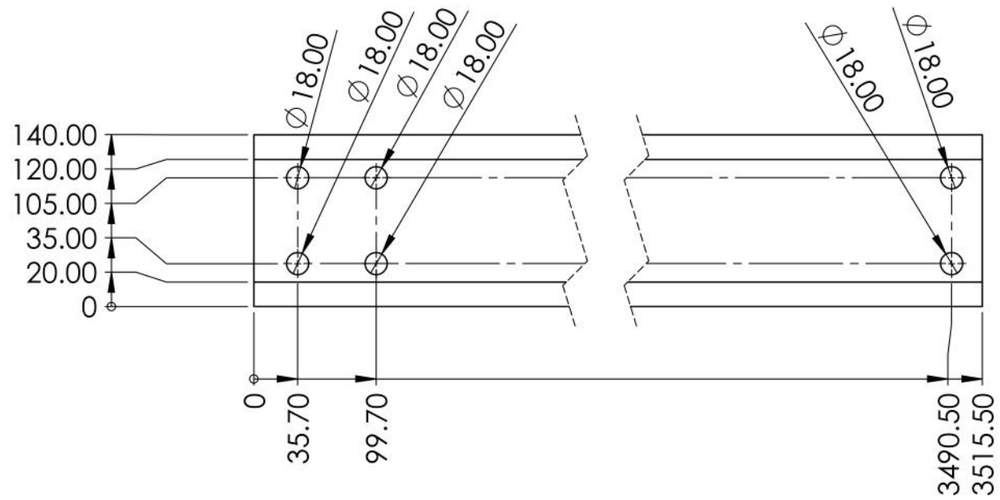

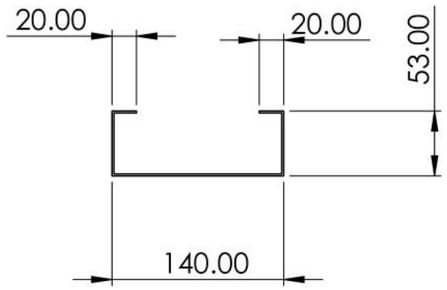

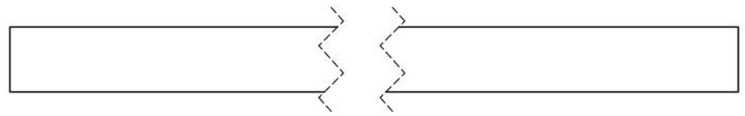

	NAME	DATE		
MODELED BY	BF	22/02/21	CUSTOMER: APG	REV: d2
DRAWN BY	BF	29/03/21	PO & PRODUCT: Portal Frame	
CHECKED BY	AH	09/04/21	DESCRIPTION:	
APPROVED BY	SJ	09/04/21		

IF IN DOUBT-ASK

UNLESS OTHERWISE SPECIFIED: DIMENSIONS ARE IN MILLIMETERS	MATERIAL:	DRAWING NO: C-Section 4	
DO NOT SCALE DRAWING	FINISH:	SCALE: 1:5	SHEET OF	A3

odoni elwell
consult • design • manufacture • install

ITEM NO.	PART NUMBER	DESCRIPTION	QTY.	LENGTH
14	C-Section 5	140mm C Section	1	
14.1		140mm C-Section	1	3458.5

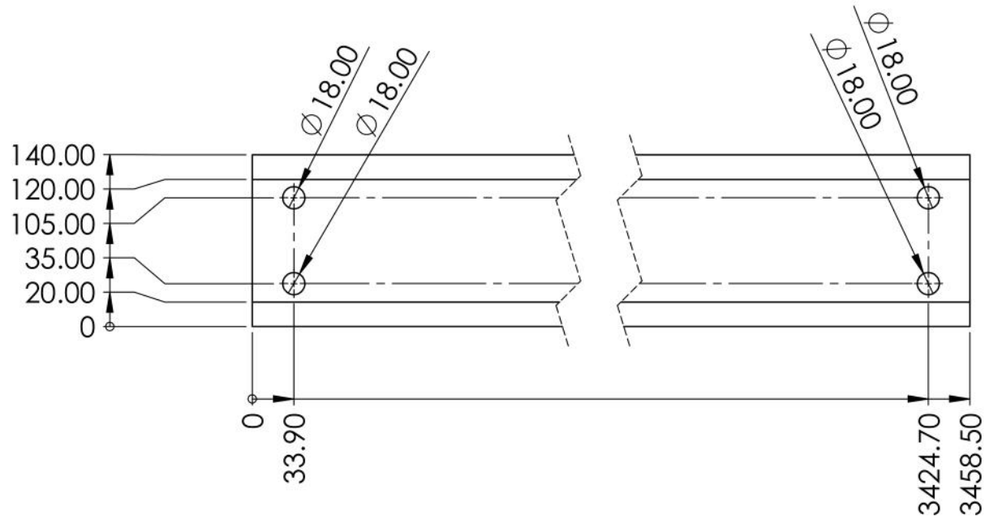

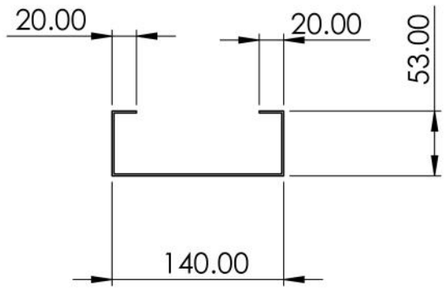

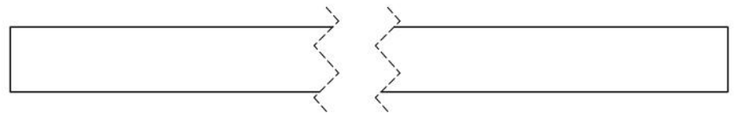

	NAME	DATE		
MODELED BY	BF	22/02/21	CUSTOMER: APG	REV: d2
DRAWN BY	BF	29/03/21	PO & PRODUCT: Portal Frame	
CHECKED BY	AH	09/04/21	DESCRIPTION:	
APPROVED BY	SJ	09/04/21		

IF IN DOUBT-ASK

UNLESS OTHERWISE SPECIFIED: DIMENSIONS ARE IN MILLIMETERS	MATERIAL:	DRAWING NO: C-Section 5	
DO NOT SCALE DRAWING	FINISH:	SCALE: 1:5	SHEET OF	A3

odoni elwell
consult • design • manufacture • install

ITEM NO.	PART NUMBER	DESCRIPTION	QTY.	LENGTH
15	C-Section 6	140mm C Section	4	
15.1		140mm C-Section	1	520

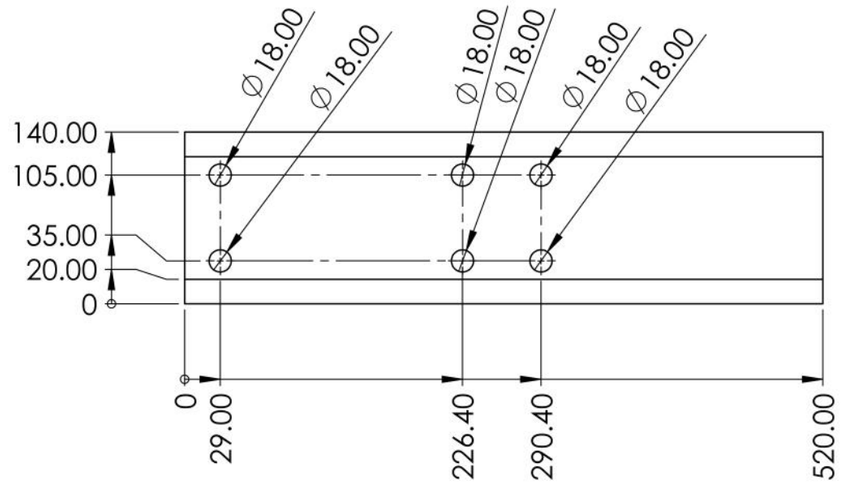

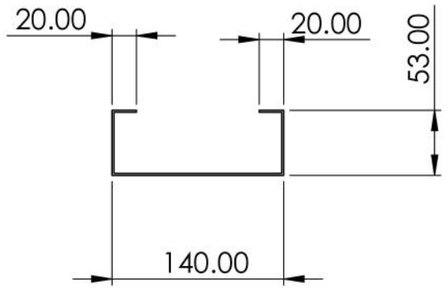

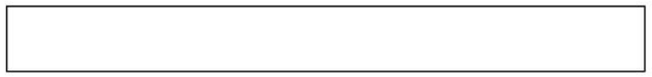

IF IN DOUBT-ASK

	NAME	DATE
MODELED BY	BF	22/02/21
DRAWN BY	BF	29/03/21
CHECKED BY	AH	09/04/21
APPROVED BY	SJ	09/04/21

CUSTOMER: APG

REV: d2

PO & PRODUCT: Portal Frame

DESCRIPTION:

UNLESS OTHERWISE SPECIFIED:
DIMENSIONS ARE IN MILLIMETERS

MATERIAL:

DRAWING NO: C-Section 6

DO NOT SCALE DRAWING

FINISH:

SCALE: 1:5

SHEET OF

A3

odoni elwell
consult • design • manufacture • install

ITEM NO.	PART NUMBER	DESCRIPTION	QTY.	LENGTH
16	C-Section 7	140mm C Section	4	
16.1		140mm C-Section	1	1566

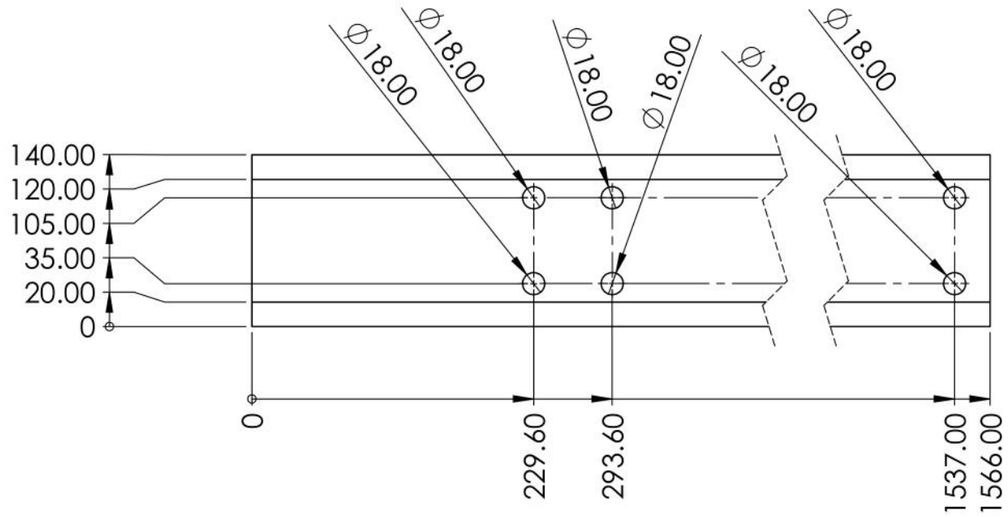

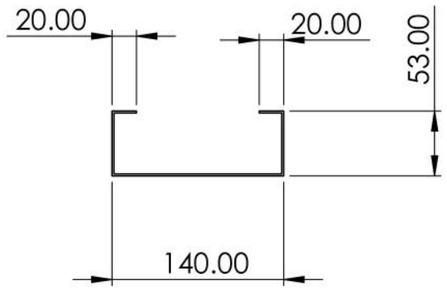

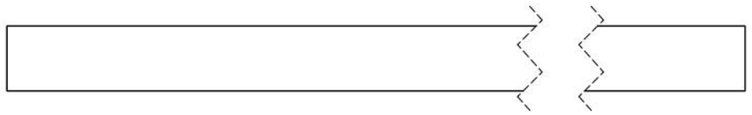

	NAME	DATE		
MODELED BY	BF	22/02/21	CUSTOMER: APG	REV: d2
DRAWN BY	BF	29/03/21	PO & PRODUCT: Portal Frame	
CHECKED BY	AH	09/04/21	DESCRIPTION:	
APPROVED BY	SJ	09/04/21		

IF IN DOUBT-ASK

UNLESS OTHERWISE SPECIFIED: DIMENSIONS ARE IN MILLIMETERS	MATERIAL:	DRAWING NO: C-Section 7	
DO NOT SCALE DRAWING	FINISH:	SCALE: 1:5	SHEET OF	A3

odoni elwell
consult • design • manufacture • install

ITEM NO.	PART NUMBER	DESCRIPTION	QTY.	LENGTH
17	C-Section 8	140mm C Section	2	
17.1		140mm C-Section	1	3256

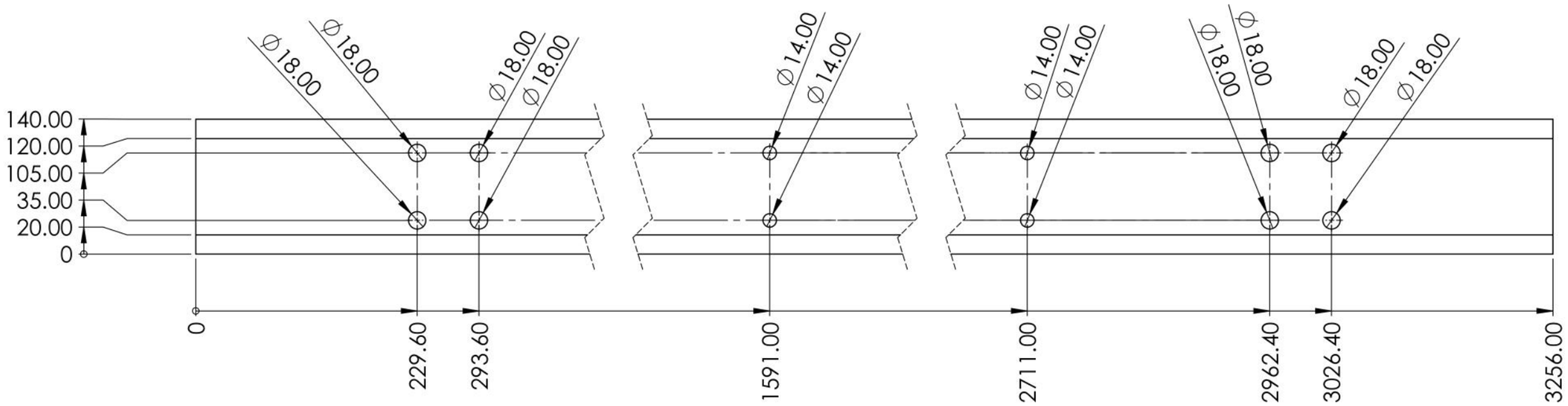

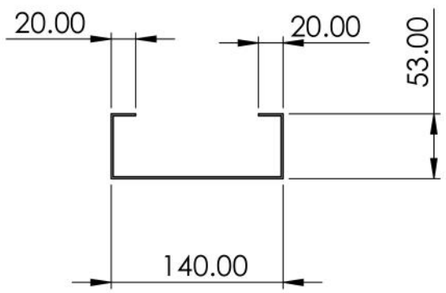

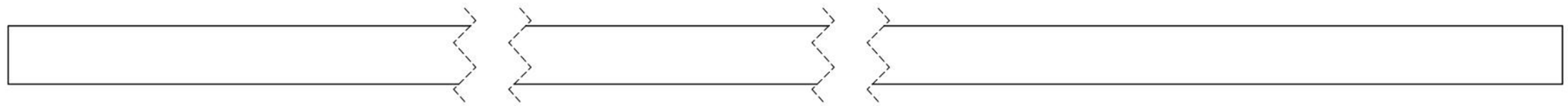

IF IN DOUBT-ASK

	NAME	DATE
MODELED BY	BF	22/02/21
DRAWN BY	BF	29/03/21
CHECKED BY	AH	09/04/21
APPROVED BY	SJ	09/04/21

CUSTOMER: APG

REV: d2

PO & PRODUCT: Portal Frame

DESCRIPTION:

UNLESS OTHERWISE SPECIFIED:
DIMENSIONS ARE IN MILLIMETERS

MATERIAL:

DRAWING NO: C-Section 8

DO NOT SCALE DRAWING

FINISH:

SCALE: 1:5

SHEET OF

A3

odoni elwell
consult • design • manufacture • install

ITEM NO.	PART NUMBER	DESCRIPTION	QTY.	LENGTH
18	C-Section 15	140mm C Section	1	
18.1		140mm C-Section	1	3447

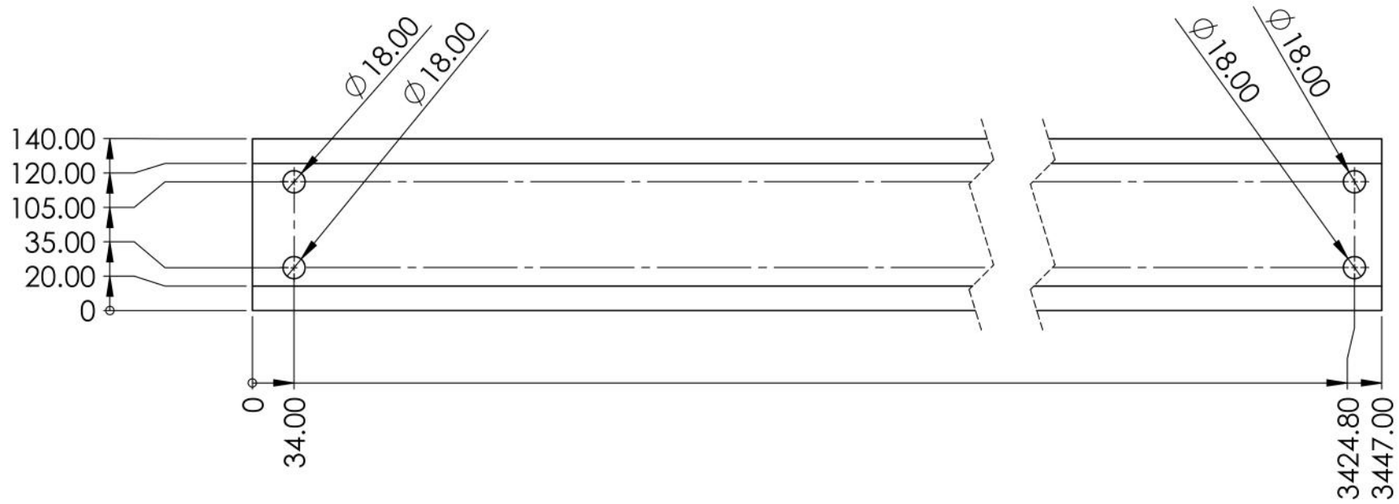

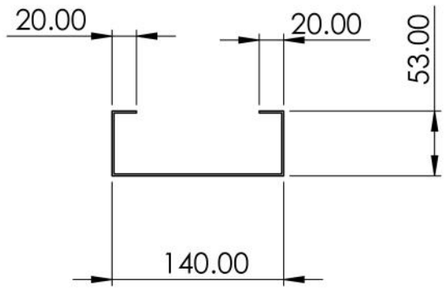

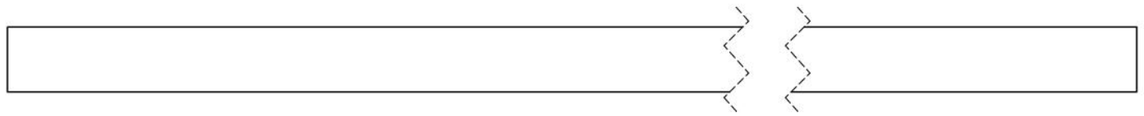

	NAME	DATE		
MODELED BY	BF	22/02/21	CUSTOMER: APG	REV: d2
DRAWN BY	BF	29/03/21	PO & PRODUCT: Portal Frame	
CHECKED BY	AH	09/04/21	DESCRIPTION:	
APPROVED BY	SJ	09/04/21		

IF IN DOUBT-ASK

UNLESS OTHERWISE SPECIFIED: DIMENSIONS ARE IN MILLIMETERS	MATERIAL:	DRAWING NO: C-Section 15	
DO NOT SCALE DRAWING	FINISH:	SCALE: 1:5	SHEET OF	A3

odoni elwell
consult • design • manufacture • install

ITEM NO.	PART NUMBER	DESCRIPTION	QTY.	LENGTH
19	C-Section 16	140mm C Section	4	
19.1		140mm C-Section	1	1205

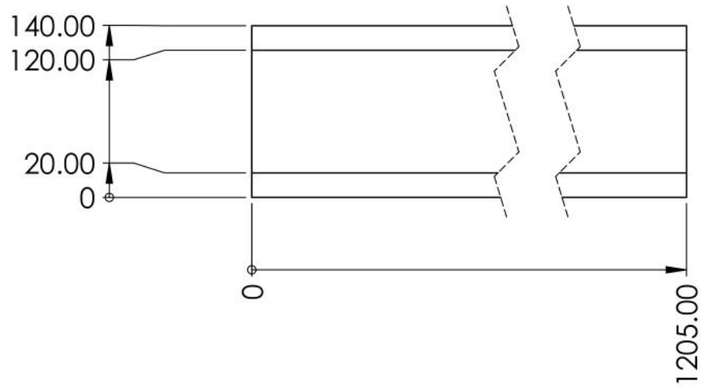

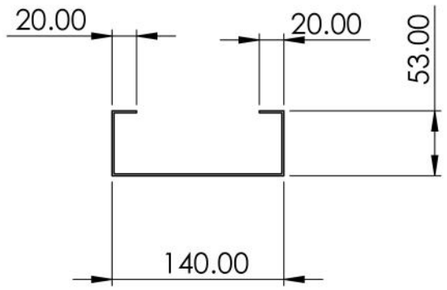

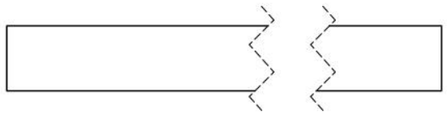

	NAME	DATE		
MODELED BY	BF	22/02/21	CUSTOMER: APG	REV: d2
DRAWN BY	BF	29/03/21	PO & PRODUCT: Portal Frame	
CHECKED BY	AH	09/04/21	DESCRIPTION:	
APPROVED BY	SJ	09/04/21		

IF IN DOUBT-ASK

UNLESS OTHERWISE SPECIFIED: DIMENSIONS ARE IN MILLIMETERS	MATERIAL:	DRAWING NO: C-Section 16	
DO NOT SCALE DRAWING	FINISH:	SCALE: 1:5	SHEET OF	A3

odoni elwell
consult • design • manufacture • install

ITEM NO.	PART NUMBER	DESCRIPTION	QTY.	LENGTH
20	C-Section 17	140mm C Section	2	
20.1		140mm C-Section	1	3515.5

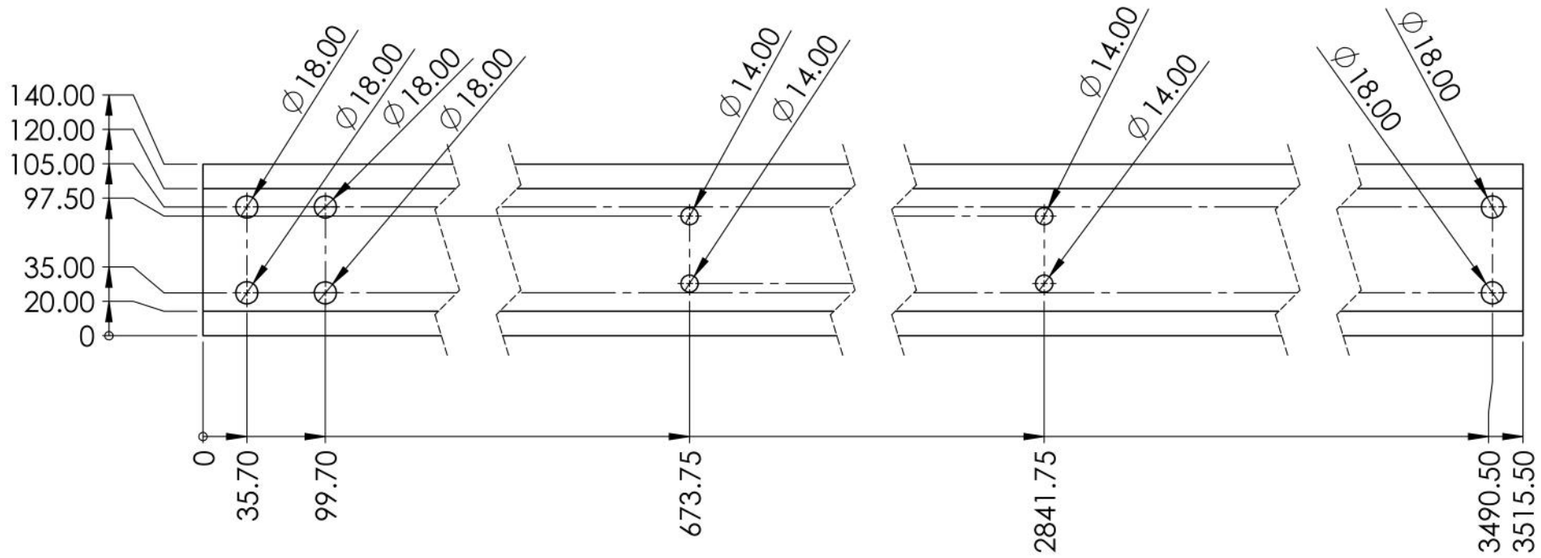

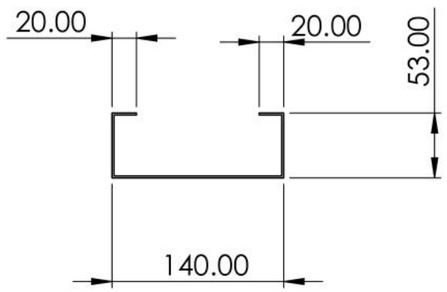

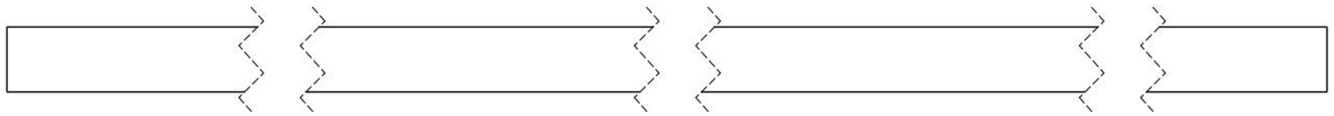

IF IN DOUBT-ASK

	NAME	DATE
MODELED BY	BF	22/02/21
DRAWN BY	BF	29/03/21
CHECKED BY	AH	09/04/21
APPROVED BY	SJ	09/04/21

CUSTOMER: APG

REV: d2

PO & PRODUCT: Portal Frame

DESCRIPTION:

UNLESS OTHERWISE SPECIFIED:
DIMENSIONS ARE IN MILLIMETERS

MATERIAL:

DRAWING NO: C-Section 17

DO NOT SCALE DRAWING

FINISH:

SCALE: 1:5

SHEET OF

A3

odoni elwell
consult • design • manufacture • install

ITEM NO.	PART NUMBER	DESCRIPTION	QTY.	LENGTH
21	C-Section 18	140mm C Section	2	
21.1		140mm C-Section	1	3447

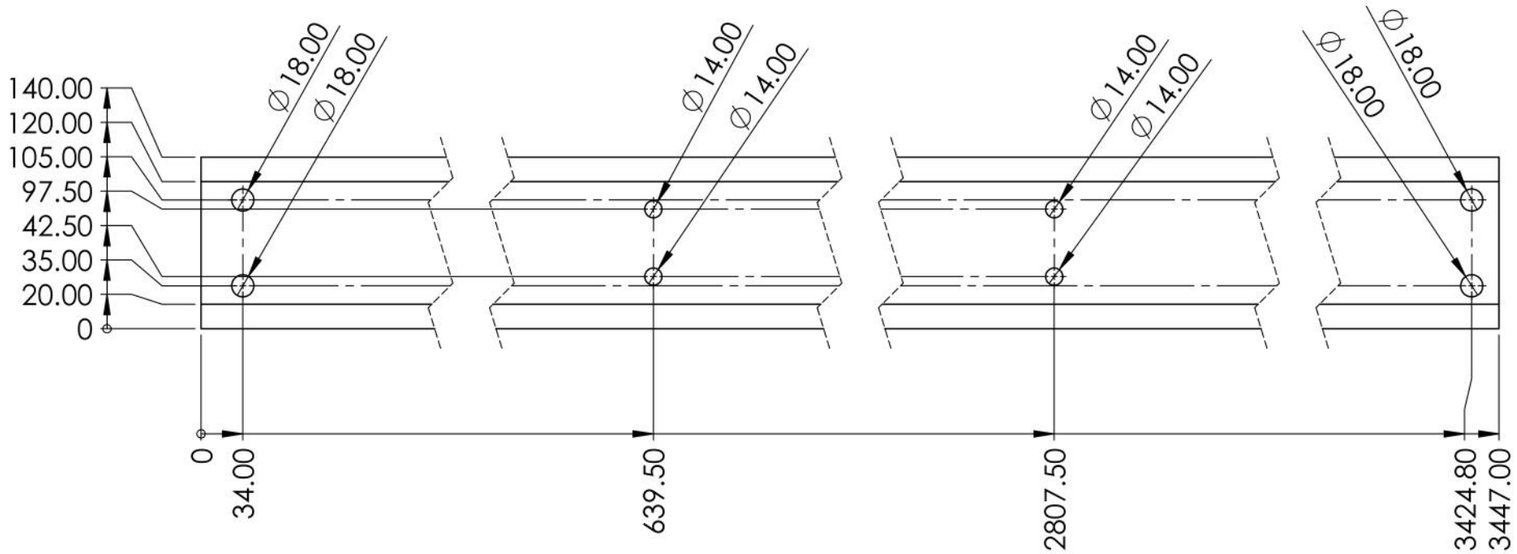

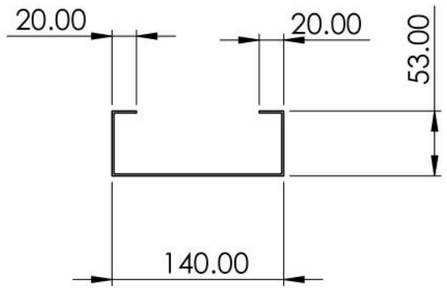

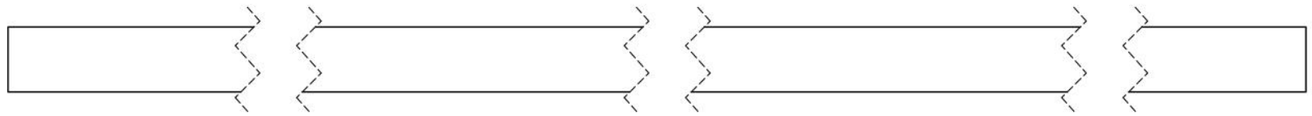

IF IN DOUBT-ASK

	NAME	DATE
MODELED BY	BF	22/02/21
DRAWN BY	BF	29/03/21
CHECKED BY	AH	09/04/21
APPROVED BY	SJ	09/04/21

CUSTOMER: APG

REV: d2

PO & PRODUCT: Portal Frame

DESCRIPTION:

UNLESS OTHERWISE SPECIFIED:
DIMENSIONS ARE IN MILLIMETERS

MATERIAL:

DRAWING NO: C-Section 18

DO NOT SCALE DRAWING

FINISH:

SCALE: 1:5

SHEET OF

A3

odoni elwell
consult • design • manufacture • install

ITEM NO.	PART NUMBER	DESCRIPTION	QTY.	LENGTH
22	C-Section 19	140mm C Section	2	
22.1		140mm C-Section	1	3256

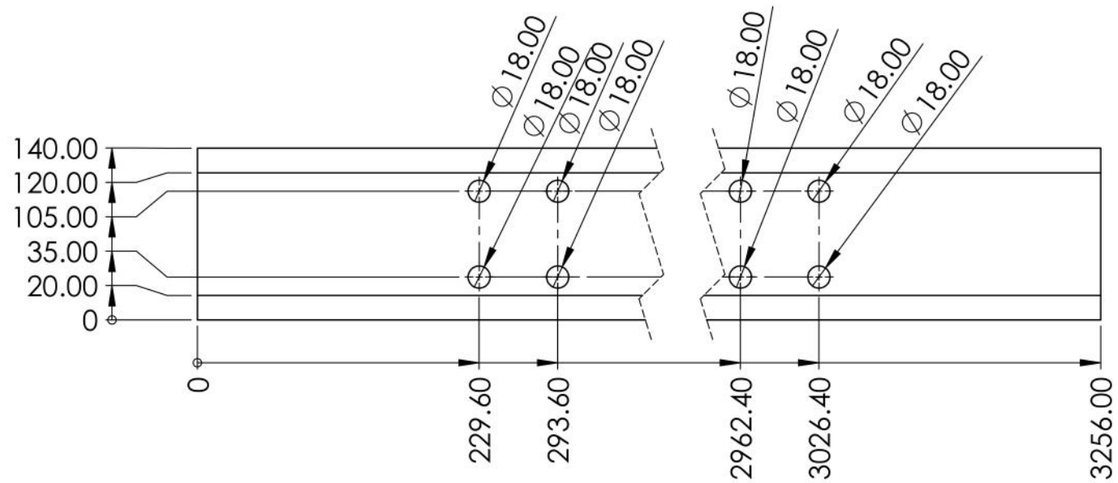

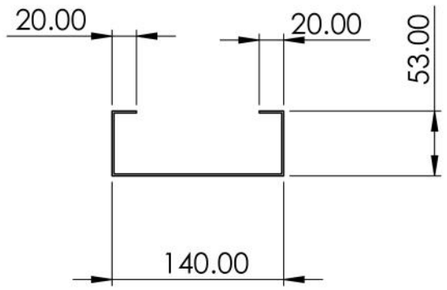

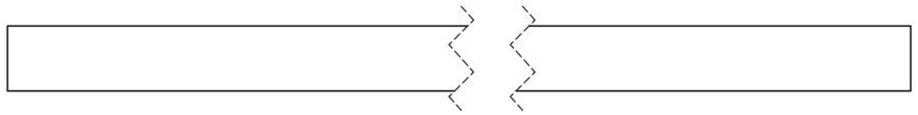

	NAME	DATE		
MODELED BY	BF	22/02/21	CUSTOMER: APG	REV: d2
DRAWN BY	BF	29/03/21	PO & PRODUCT: Portal Frame	
CHECKED BY	AH	09/04/21	DESCRIPTION:	
APPROVED BY	SJ	09/04/21		

IF IN DOUBT-ASK

UNLESS OTHERWISE SPECIFIED: DIMENSIONS ARE IN MILLIMETERS	MATERIAL:	DRAWING NO: C-Section 19	
DO NOT SCALE DRAWING	FINISH:	SCALE: 1:5	SHEET OF	A3

odoni elwell
consult • design • manufacture • install

ITEM NO.	PART NUMBER	DESCRIPTION	QTY.	LENGTH
23	Roller shutter leg		4	
23.1		152x152x30 UB	1	2580
23.2		Roller Door Top Plate 2	1	10
23.3		Roller Door Base Plate	1	10

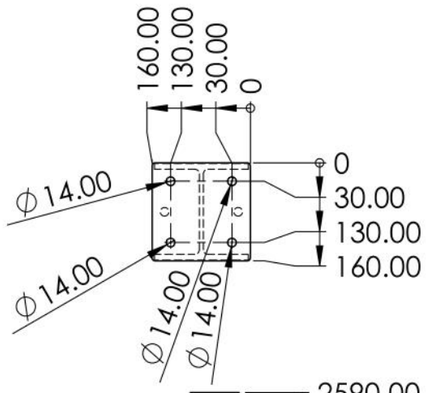

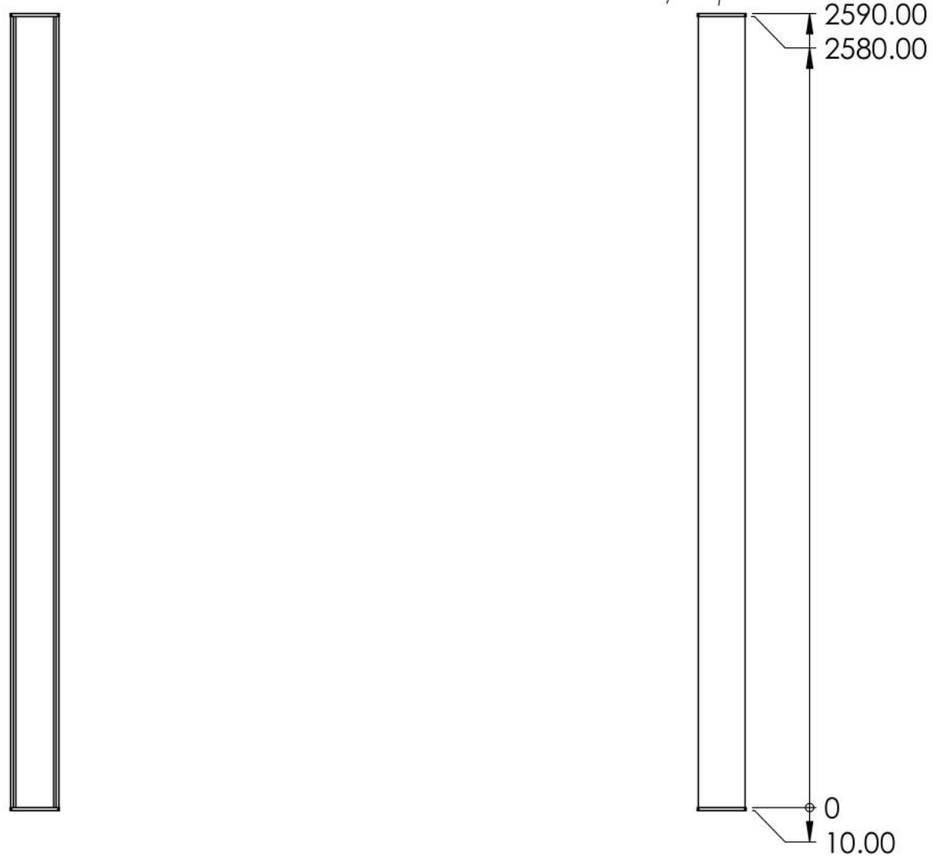

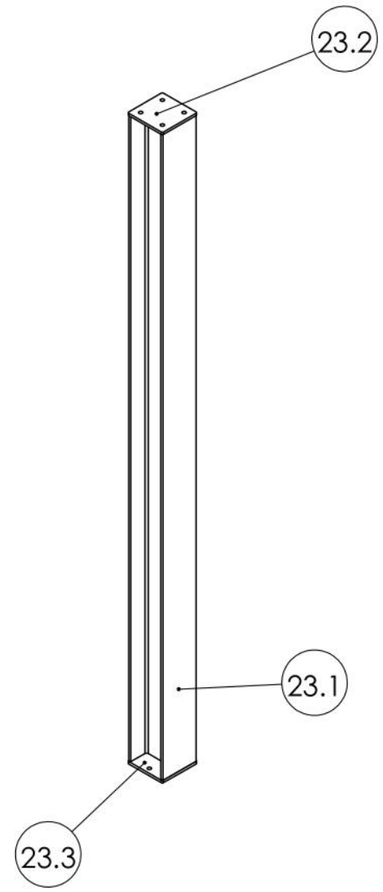

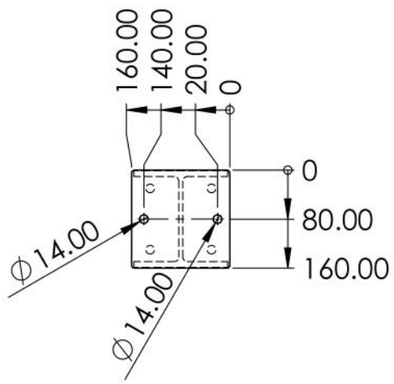

IF IN DOUBT-ASK

	NAME	DATE
MODELED BY	BF	22/02/21
DRAWN BY	BF	29/03/21
CHECKED BY	AH	09/04/21
APPROVED BY	SJ	09/04/21

CUSTOMER: APG

REV: d2

PO & PRODUCT: Portal Frame

DESCRIPTION:

UNLESS OTHERWISE SPECIFIED:
DIMENSIONS ARE IN MILLIMETERS

MATERIAL:

DRAWING NO: Roller shutter leg

DO NOT SCALE DRAWING

FINISH:

SCALE: 1:20

SHEET OF

A3

odoni elwell
consult • design • manufacture • install

ITEM NO.	PART NUMBER	DESCRIPTION	QTY.	LENGTH
24	Roller shutter top		2	
24.1		152x152x30 UB	1	3429.4
24.2		Roller Door Top Plate 1	2	10

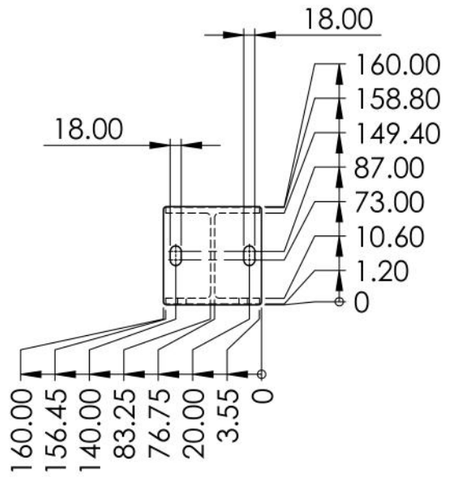

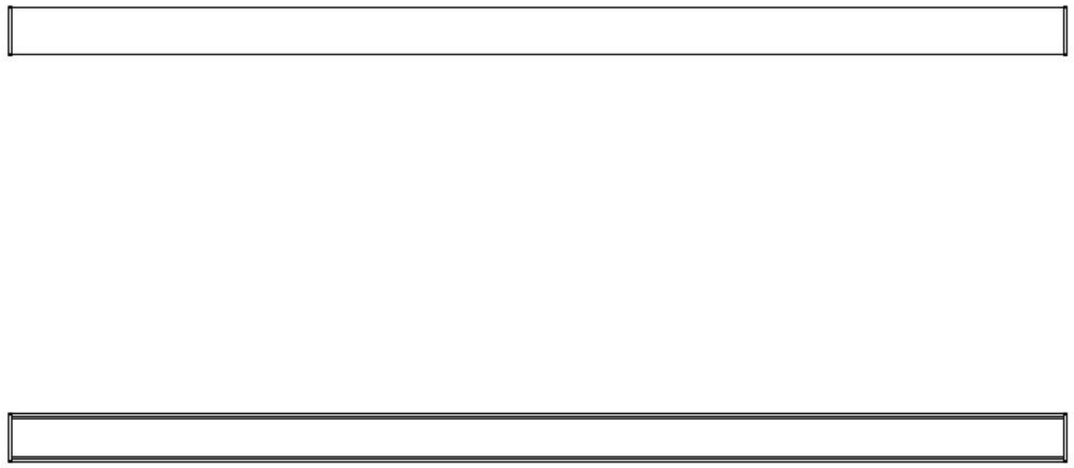

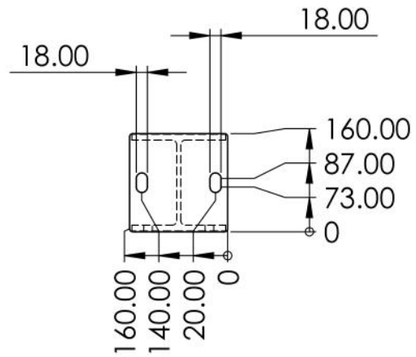

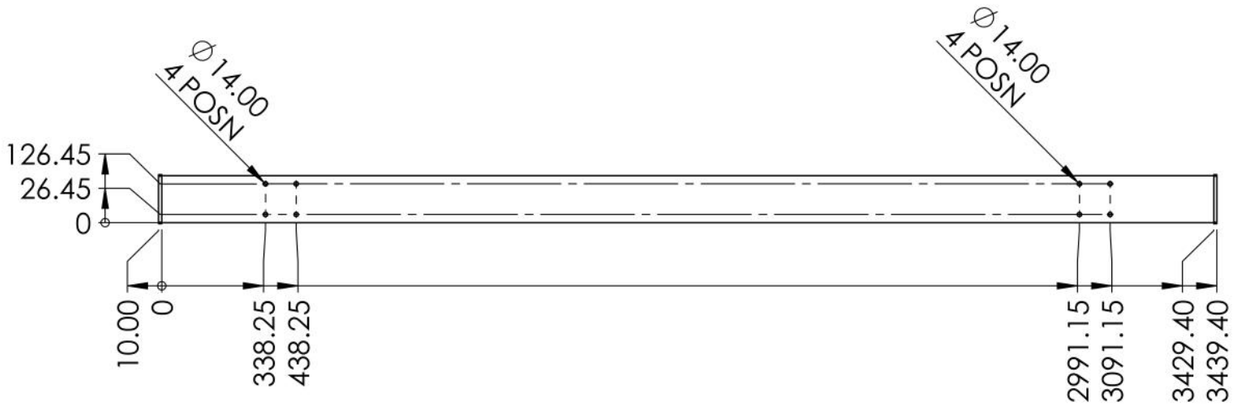

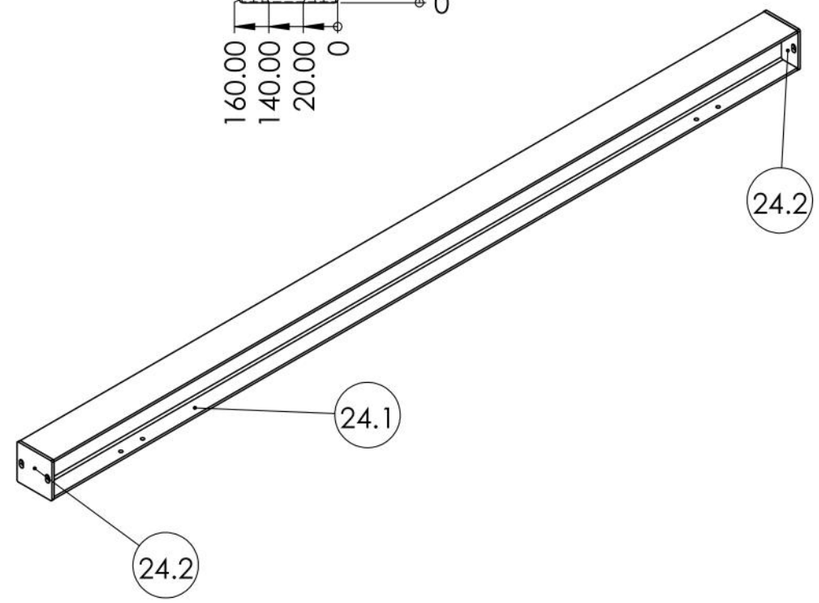

	NAME	DATE
MODELED BY	BF	22/02/21
DRAWN BY	BF	29/03/21
CHECKED BY	AH	09/04/21
APPROVED BY	SJ	09/04/21

IF IN DOUBT-ASK

CUSTOMER: APG

REV: d2

PO & PRODUCT: Portal Frame

DESCRIPTION:

UNLESS OTHERWISE SPECIFIED:
DIMENSIONS ARE IN MILLIMETERS

MATERIAL:

DRAWING NO: Roller shutter top

DO NOT SCALE DRAWING

FINISH:

SCALE: 1:20

SHEET OF

A3

odoni elwell
consult • design • manufacture • install

ITEM NO.	PART NUMBER	DESCRIPTION	QTY.	LENGTH
25	Rafter 1		3	
25.1		178x102x19 UB	1	2520.87
25.2		Rafter End Plate 2	2	12
25.3		140mm Zed Cleat	4	6
25.4		178x102x19 UB	1	375.15
25.5		178x102x19 UB	1	397.63

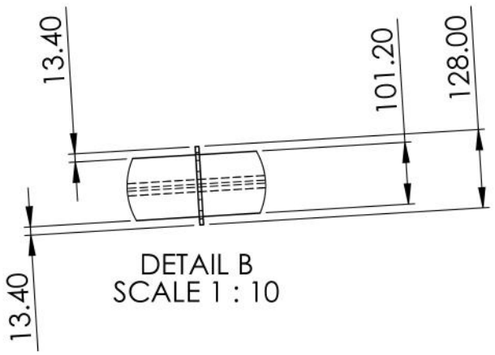

DETAIL B
SCALE 1 : 10

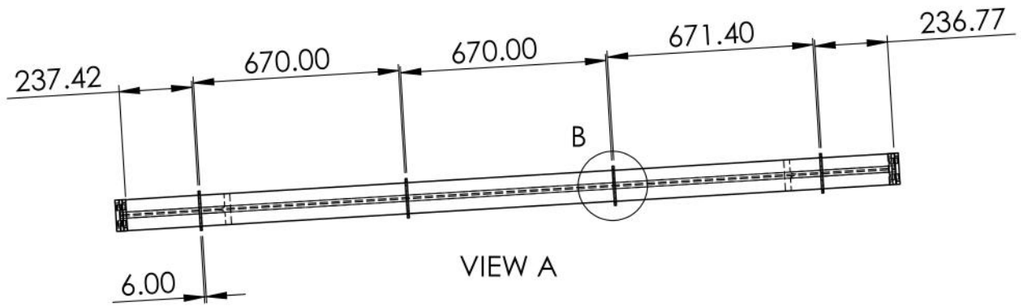

VIEW A

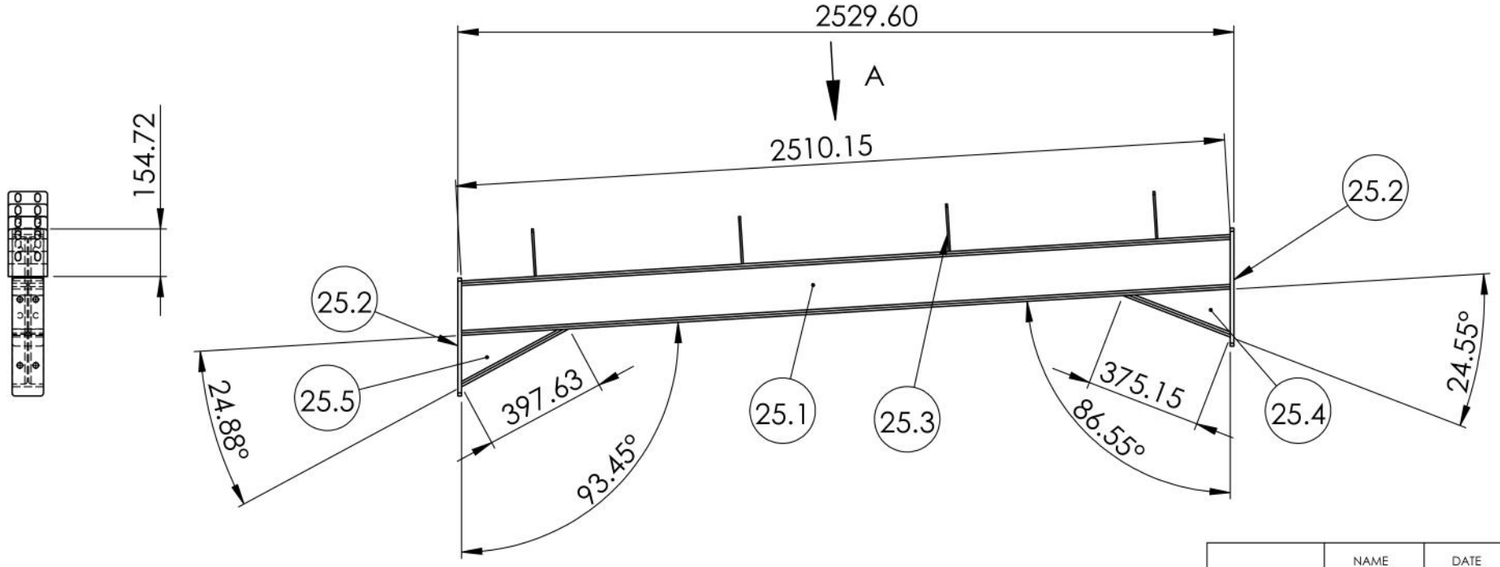

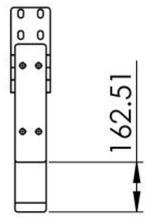

IF IN DOUBT-ASK

	NAME	DATE
MODELED BY	BF	22/02/21
DRAWN BY	BF	29/03/21
CHECKED BY	AH	09/04/21
APPROVED BY	SJ	09/04/21

CUSTOMER: APG

REV: d2

PO & PRODUCT: Portal Frame

DESCRIPTION:

UNLESS OTHERWISE SPECIFIED:
DIMENSIONS ARE IN MILLIMETERS

MATERIAL:

DRAWING NO: Rafter 1

DO NOT SCALE DRAWING

FINISH:

SCALE: 1:20

SHEET OF

A3

odoni elwell
consult • design • manufacture • install

ITEM NO.	PART NUMBER	DESCRIPTION	QTY.	LENGTH
26	Zed Section 1	140mm Zed Section	4	
26.1		140mm Zed Section	1	3665

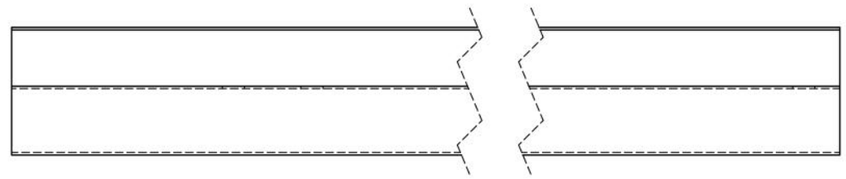

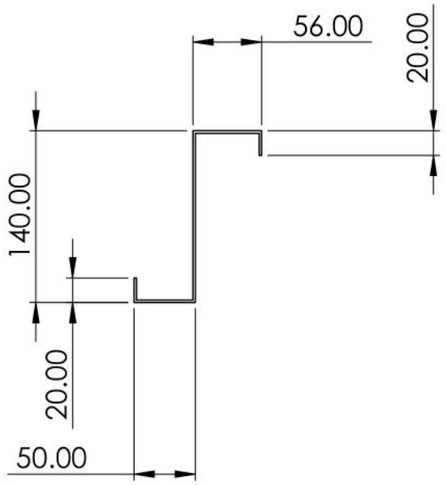

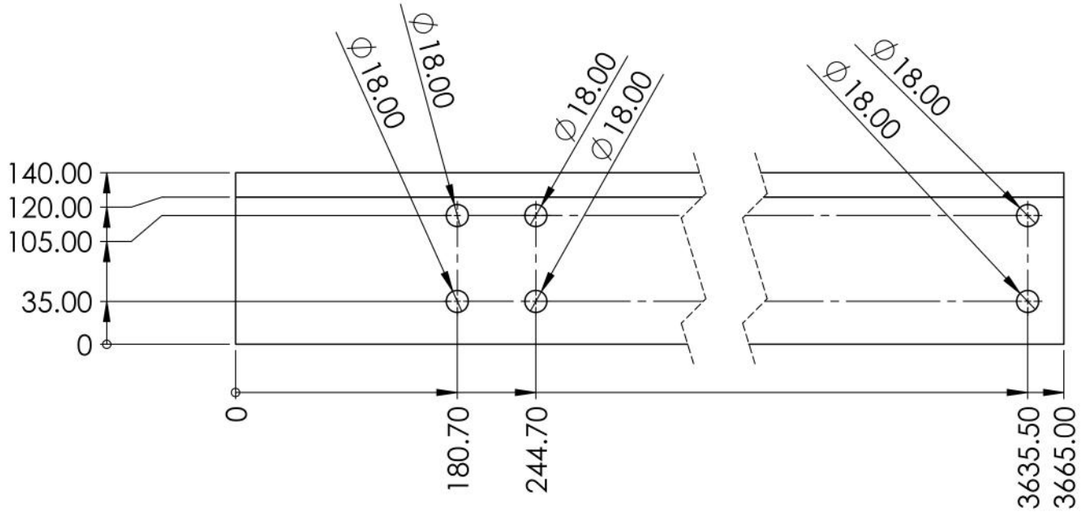

	NAME	DATE
MODELED BY	BF	22/02/21
DRAWN BY	BF	29/03/21
CHECKED BY	AH	09/04/21
APPROVED BY	SJ	09/04/21

CUSTOMER: APG

REV: d2

PO & PRODUCT: Portal Frame

DESCRIPTION:

IF IN DOUBT-ASK

UNLESS OTHERWISE SPECIFIED:
DIMENSIONS ARE IN MILLIMETERS

MATERIAL:

DRAWING NO: Zed Section 1

DO NOT SCALE DRAWING

FINISH:

SCALE: 1:5

SHEET OF

A3

odoni elwell
consult • design • manufacture • install

ITEM NO.	PART NUMBER	DESCRIPTION	QTY.	LENGTH
27	Zed Section 2	140mm Zed Section	4	
27.1		140mm Zed Section	1	3447

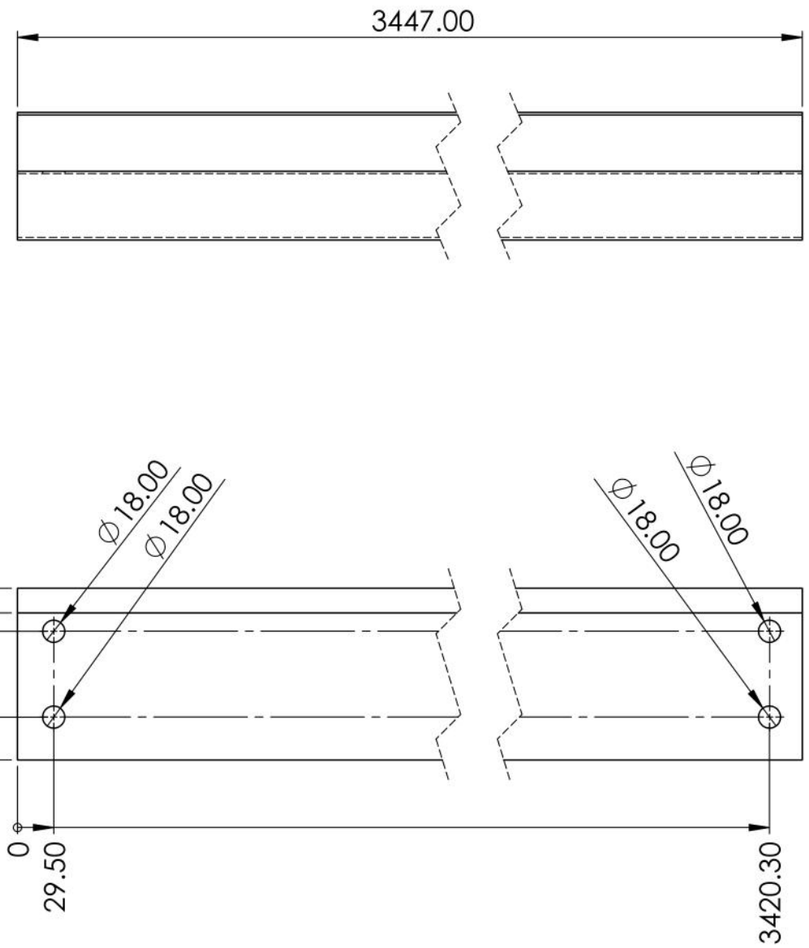

	NAME	DATE
MODELED BY	BF	22/02/21
DRAWN BY	BF	29/03/21
CHECKED BY	AH	09/04/21
APPROVED BY	SJ	09/04/21

IF IN DOUBT-ASK

UNLESS OTHERWISE SPECIFIED:
DIMENSIONS ARE IN MILLIMETERS

DO NOT SCALE DRAWING

MATERIAL:

FINISH:

CUSTOMER: APG

REV: d2

PO & PRODUCT:
Portal Frame

DESCRIPTION:

DRAWING NO:
Zed Section 2

SCALE: 1:5

SHEET OF

A3

odoni elwell
consult • design • manufacture • install

ITEM NO.	PART NUMBER	DESCRIPTION	QTY.	LENGTH
28	Front Eaves Section	170mm Eaves	1	
28.1		170mm Eaves Section	1	3665

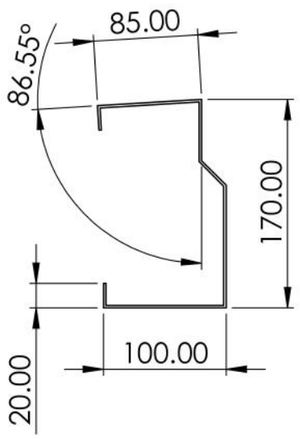

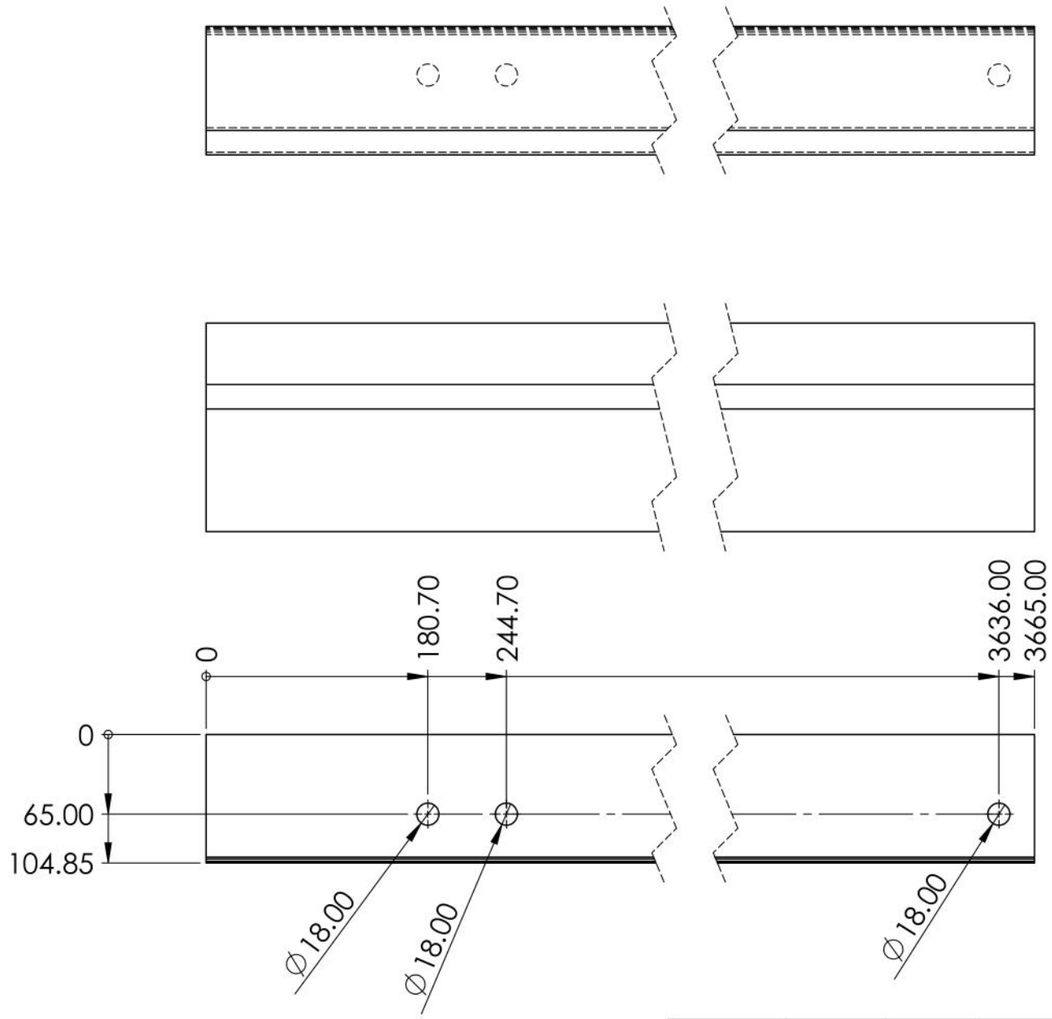

IF IN DOUBT-ASK

	NAME	DATE
MODELED BY	BF	22/02/21
DRAWN BY	BF	29/03/21
CHECKED BY	AH	09/04/21
APPROVED BY	SJ	09/04/21

CUSTOMER: APG

REV: d2

PO & PRODUCT: Portal Frame

DESCRIPTION:

UNLESS OTHERWISE SPECIFIED:
DIMENSIONS ARE IN MILLIMETERS

MATERIAL:

DRAWING NO: Front Eaves Section

DO NOT SCALE DRAWING

FINISH:

SCALE: 1:5

SHEET OF

A3

odoni elwell
consult • design • manufacture • install

ITEM NO.	PART NUMBER	DESCRIPTION	QTY.	LENGTH
29	Rear Eaves Section	170mm Eaves	1	
29.1		170mm Eaves Section	1	3665

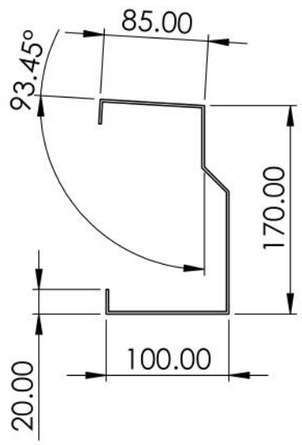

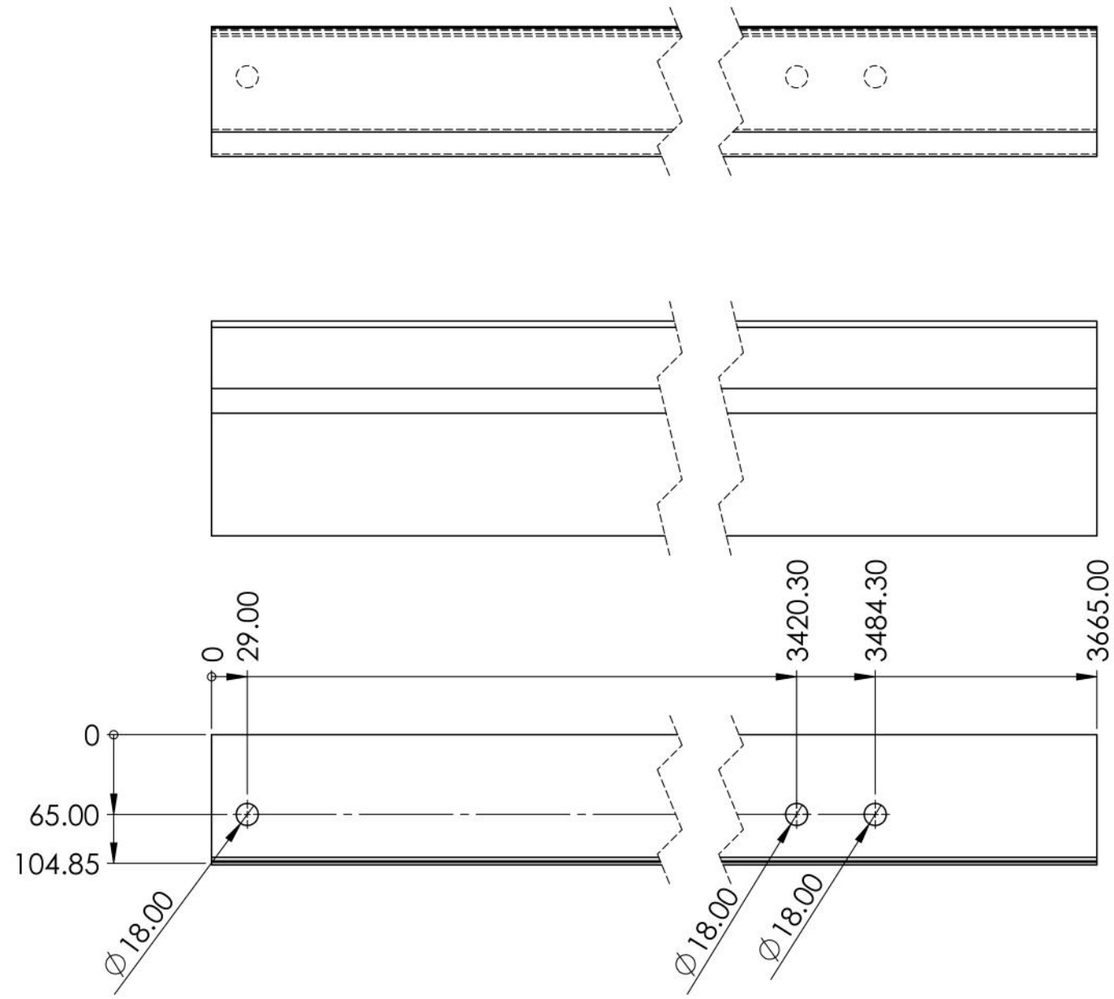

IF IN DOUBT-ASK

	NAME	DATE
MODELED BY	BF	22/02/21
DRAWN BY	BF	29/03/21
CHECKED BY	AH	09/04/21
APPROVED BY	SJ	09/04/21

CUSTOMER: APG

REV: d2

PO & PRODUCT: Portal Frame

DESCRIPTION:

UNLESS OTHERWISE SPECIFIED:
DIMENSIONS ARE IN MILLIMETERS

MATERIAL:

DRAWING NO: Rear Eaves Section

DO NOT SCALE DRAWING

FINISH:

SCALE: 1:5

SHEET OF

A3

odoni elwell
consult • design • manufacture • install

ITEM NO.	PART NUMBER	DESCRIPTION	QTY.	LENGTH
30	Front Eaves Section 2	170mm Eaves	1	
30.1		170mm Eaves Section	1	3447

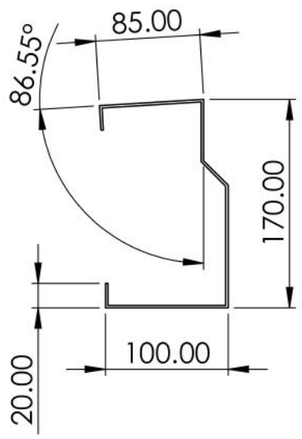

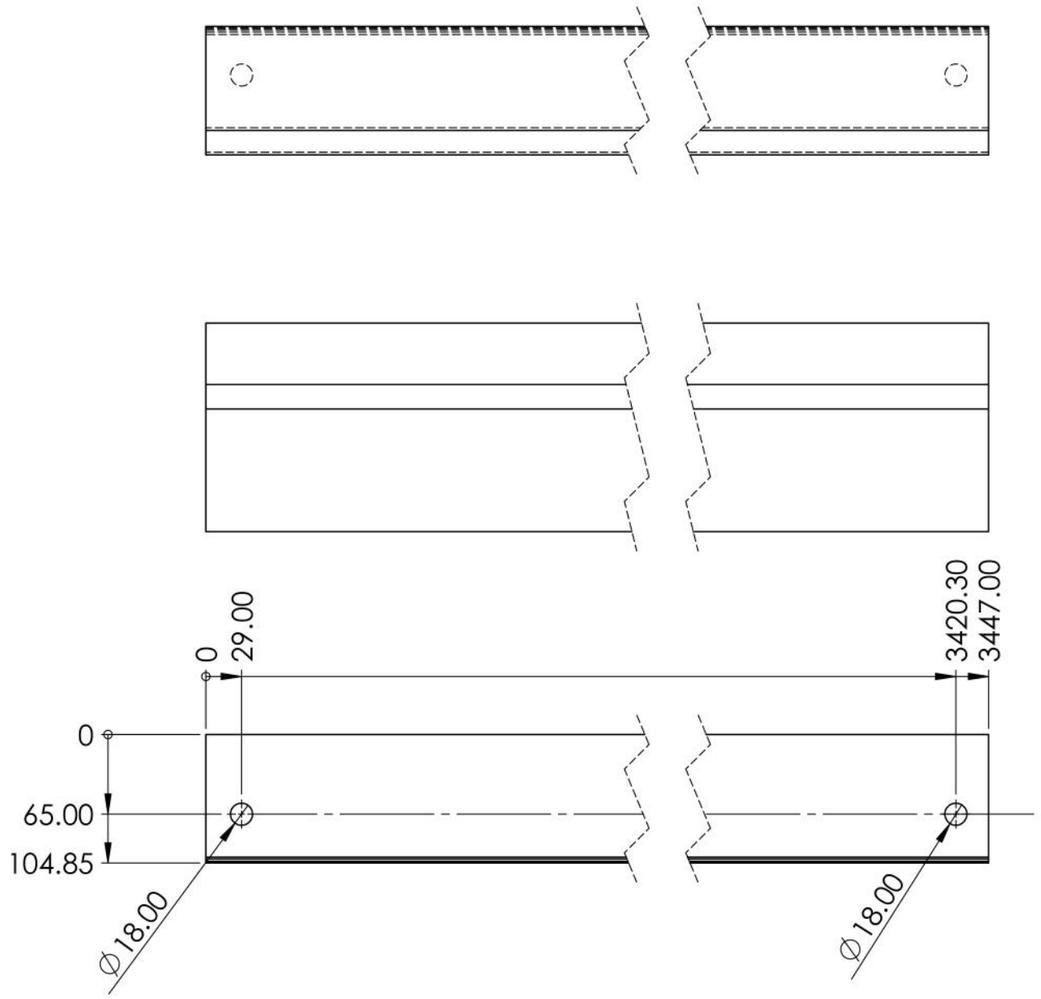

	NAME	DATE	CUSTOMER: APG	REV: d2
MODELED BY	BF	22/02/21	PO & PRODUCT: Portal Frame	
DRAWN BY	BF	29/03/21		
CHECKED BY	AH	09/04/21	DESCRIPTION:	
APPROVED BY	SJ	09/04/21		

IF IN DOUBT-ASK

UNLESS OTHERWISE SPECIFIED: DIMENSIONS ARE IN MILLIMETERS	MATERIAL:	DRAWING NO: Front Eaves Section 2		
DO NOT SCALE DRAWING	FINISH:	SCALE: 1:5	SHEET OF	A3

odoni elwell
consult • design • manufacture • install

ITEM NO.	PART NUMBER	DESCRIPTION	QTY.	LENGTH
31	Rear Eaves Section 2	170mm Eaves	1	
31.1		170mm Eaves Section	1	3447

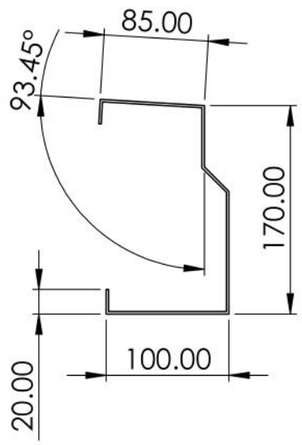

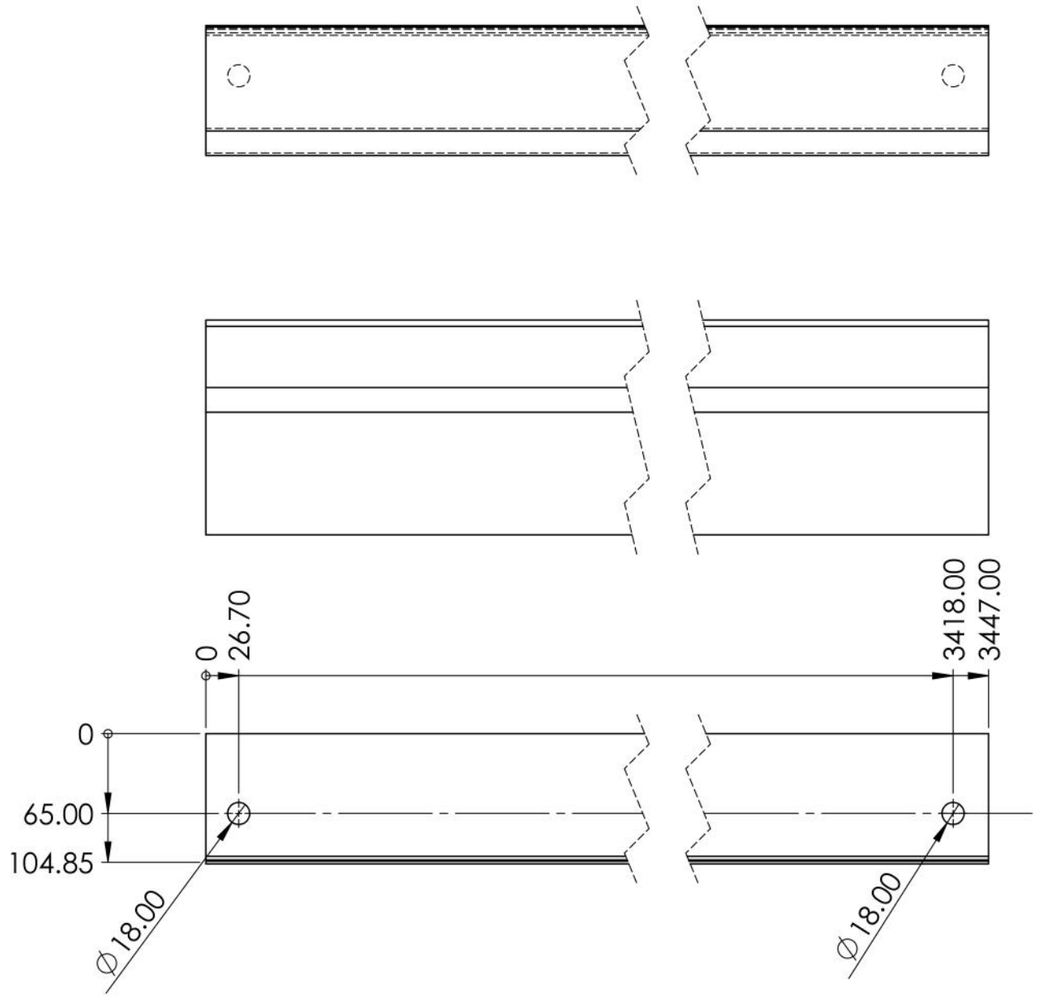

IF IN DOUBT-ASK

	NAME	DATE
MODELED BY	BF	22/02/21
DRAWN BY	BF	29/03/21
CHECKED BY	AH	09/04/21
APPROVED BY	SJ	09/04/21

CUSTOMER: APG

REV: d2

PO & PRODUCT: Portal Frame

DESCRIPTION:

UNLESS OTHERWISE SPECIFIED:
DIMENSIONS ARE IN MILLIMETERS

MATERIAL:

DRAWING NO: Rear Eaves Section 2

DO NOT SCALE DRAWING

FINISH:

SCALE: 1:5

SHEET OF

A3

odoni elwell
consult • design • manufacture • install

ITEM NO.	PART NUMBER	DESCRIPTION	QTY.	LENGTH
35	Angle 1		8	
		L 45.00 X 45.00 X 2.000	1	110

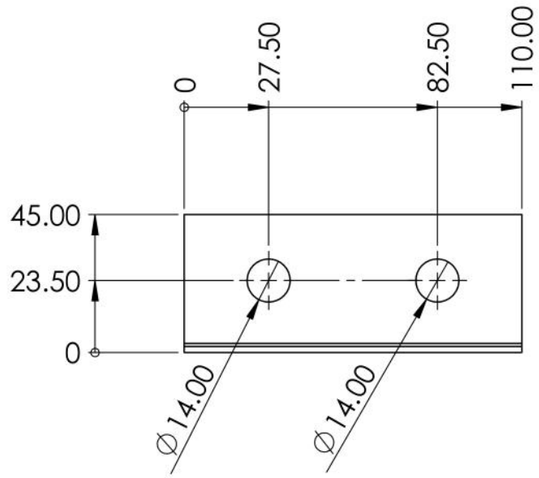

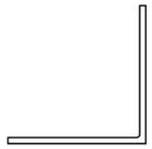

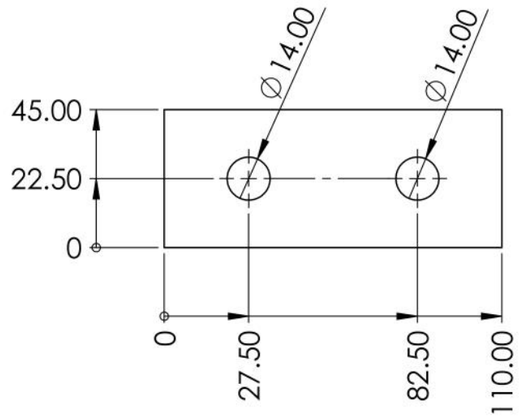

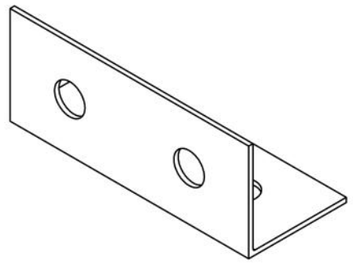

IF IN DOUBT-ASK

	NAME	DATE
MODELED BY	BF	22/02/21
DRAWN BY	BF	29/03/21
CHECKED BY	AH	09/04/21
APPROVED BY	SJ	09/04/21

CUSTOMER: APG

REV: d2

PO & PRODUCT: Portal Frame

DESCRIPTION:

UNLESS OTHERWISE SPECIFIED:
DIMENSIONS ARE IN MILLIMETERS

MATERIAL:

DRAWING NO: Angle 1

DO NOT SCALE DRAWING

FINISH:

SCALE: 1:2

SHEET OF

A3

odoni elwell
consult • design • manufacture • install

DESCRIPTION	QTY.	LENGTH
250x250x15mm Base Plate	6	15

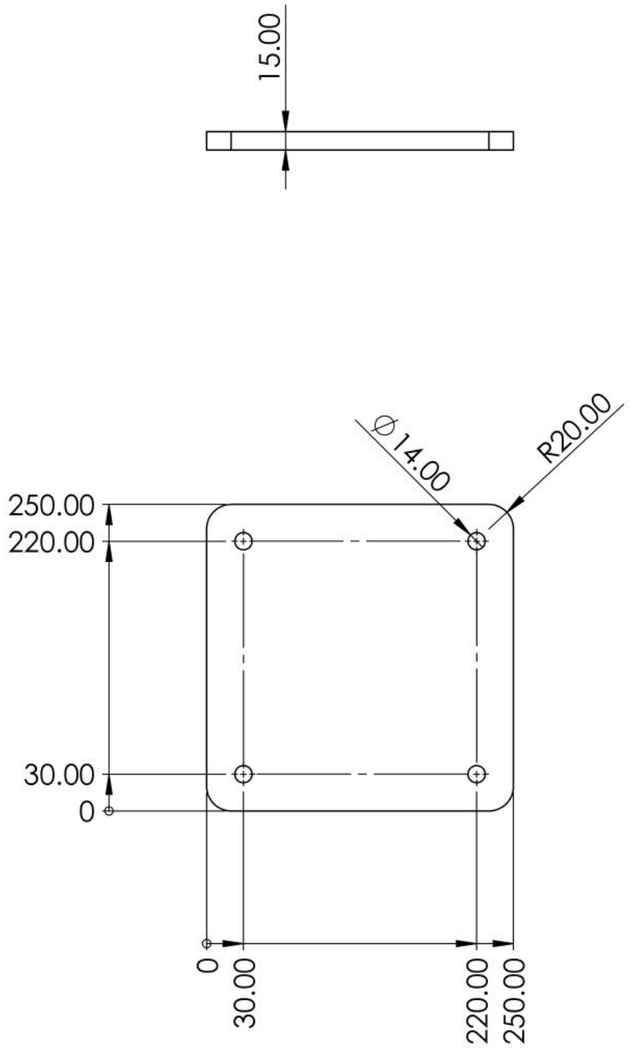

IF IN DOUBT-ASK

	NAME	DATE
MODELED BY	BF	22/02/21
DRAWN BY	BF	29/03/21
CHECKED BY	AH	09/04/21
APPROVED BY	SJ	09/04/21

CUSTOMER: APG

REV: d2

PO & PRODUCT: Portal Frame

DESCRIPTION:

UNLESS OTHERWISE SPECIFIED:
DIMENSIONS ARE IN MILLIMETERS

MATERIAL:

DRAWING NO: 250x250x15mm Base Plate

DO NOT SCALE DRAWING

FINISH:

SCALE: 1:5

SHEET OF

A3

odoni elwell
consult • design • manufacture • install

DESCRIPTION	QTY.	LENGTH
Door Base Plate 2	4	10

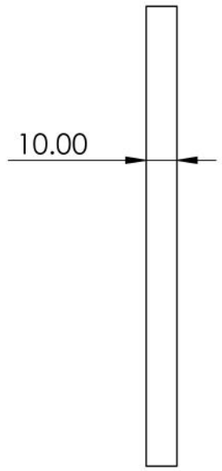

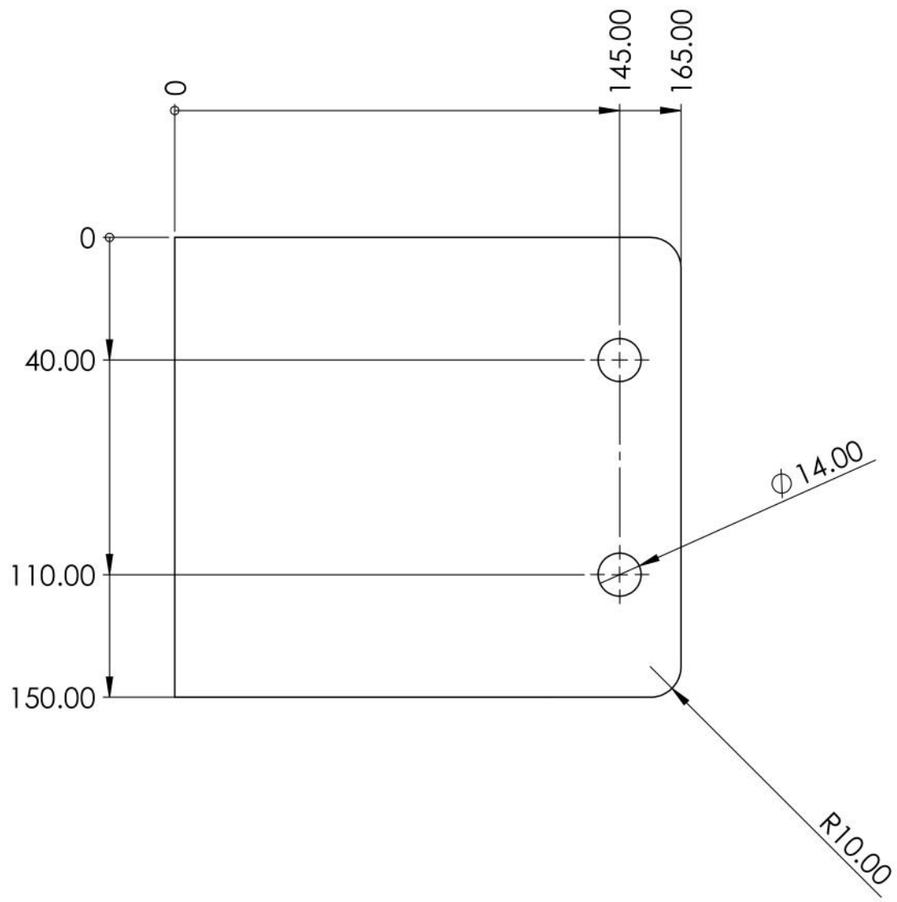

IF IN DOUBT-ASK

	NAME	DATE
MODELED BY	BF	22/02/21
DRAWN BY	BF	29/03/21
CHECKED BY	AH	09/04/21
APPROVED BY	SJ	09/04/21

CUSTOMER: APG

REV: d2

PO & PRODUCT: Portal Frame

DESCRIPTION:

UNLESS OTHERWISE SPECIFIED:
DIMENSIONS ARE IN MILLIMETERS

MATERIAL:

DRAWING NO: Door Base Plate 2

DO NOT SCALE DRAWING

FINISH:

SCALE: 1:2

SHEET OF

A3

odoni elwell
consult • design • manufacture • install

DESCRIPTION	QTY.	LENGTH
Door Cleat	8	6

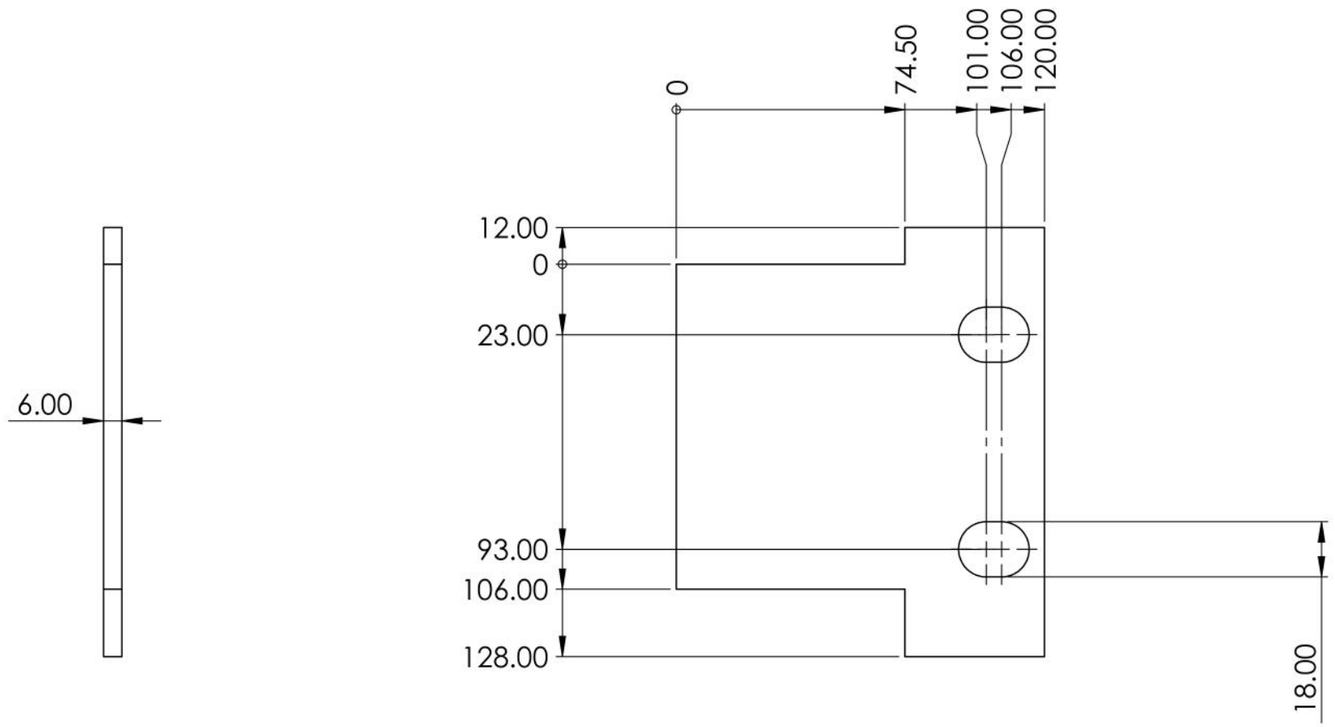

IF IN DOUBT-ASK

	NAME	DATE
MODELED BY	BF	22/02/21
DRAWN BY	BF	29/03/21
CHECKED BY	AH	09/04/21
APPROVED BY	SJ	09/04/21

CUSTOMER: APG

REV: d2

PO & PRODUCT: Portal Frame

DESCRIPTION:

UNLESS OTHERWISE SPECIFIED:
DIMENSIONS ARE IN MILLIMETERS

MATERIAL:

DRAWING NO: Door Cleat

DO NOT SCALE DRAWING

FINISH:

SCALE: 1:2

SHEET OF

A3

odoni elwell
consult • design • manufacture • install

DESCRIPTION	QTY.	LENGTH
Rafter End Plate 2	6	12

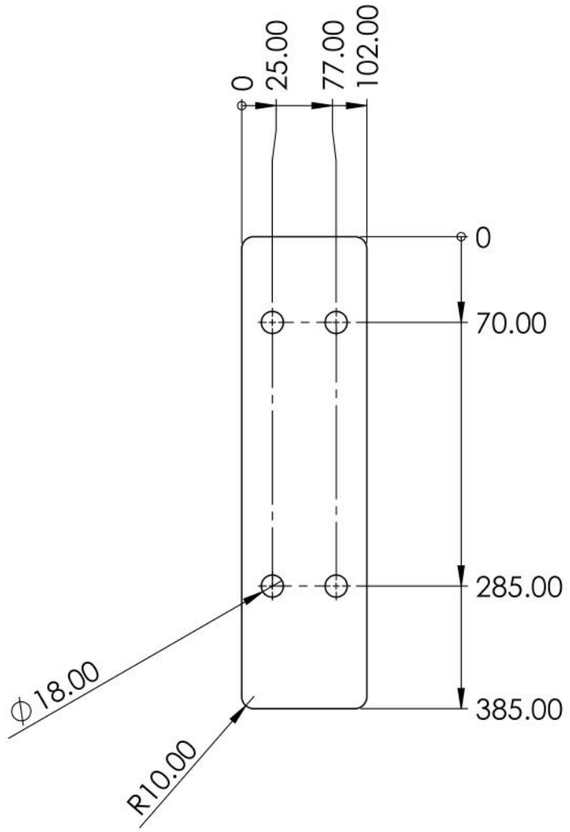

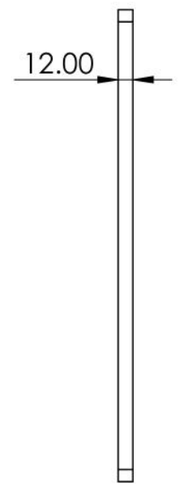

IF IN DOUBT-ASK

	NAME	DATE
MODELED BY	BF	22/02/21
DRAWN BY	BF	29/03/21
CHECKED BY	AH	09/04/21
APPROVED BY	SJ	09/04/21

CUSTOMER: APG

REV: d2

PO & PRODUCT: Portal Frame

DESCRIPTION:

UNLESS OTHERWISE SPECIFIED:
DIMENSIONS ARE IN MILLIMETERS

MATERIAL:

DRAWING NO: Rafter End Plate 2

DO NOT SCALE DRAWING

FINISH:

SCALE: 1:5

SHEET OF

A3

odoni elwell
consult • design • manufacture • install

DESCRIPTION	QTY.	LENGTH
Side C-Section Cleat	16	6

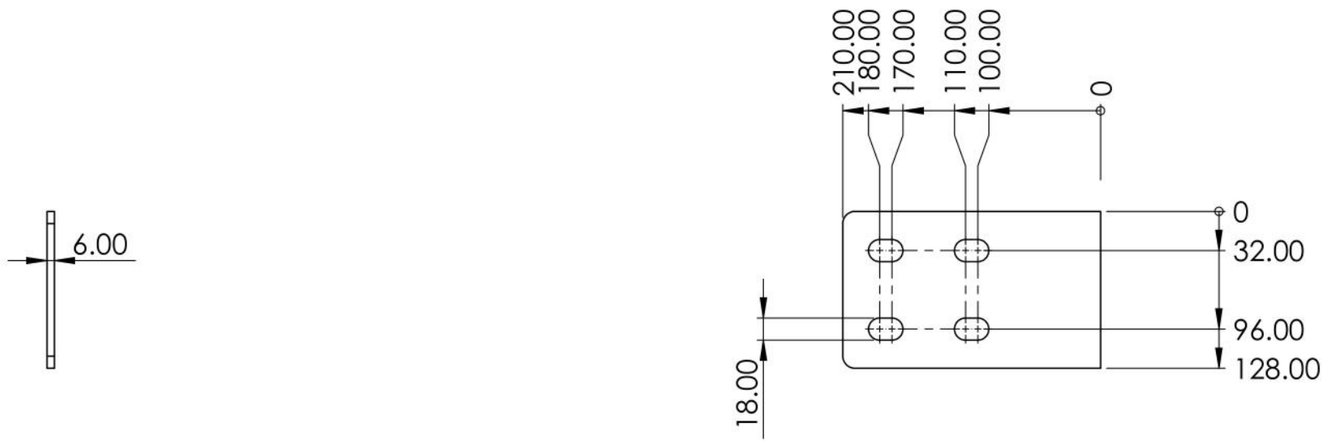

IF IN DOUBT-ASK

	NAME	DATE		
			CUSTOMER: APG	REV: d2
MODELED BY	BF	22/02/21	PO & PRODUCT: Portal Frame	
DRAWN BY	BF	29/03/21		
CHECKED BY	AH	09/04/21	DESCRIPTION:	
APPROVED BY	SJ	09/04/21		
UNLESS OTHERWISE SPECIFIED: DIMENSIONS ARE IN MILLIMETERS	MATERIAL:		DRAWING NO: Side C-Section Cleat	
DO NOT SCALE DRAWING	FINISH:		SCALE: 1:5	SHEET OF A3

odoni elwell
consult • design • manufacture • install

DESCRIPTION	QTY.	LENGTH
Top Door Cleat	4	10

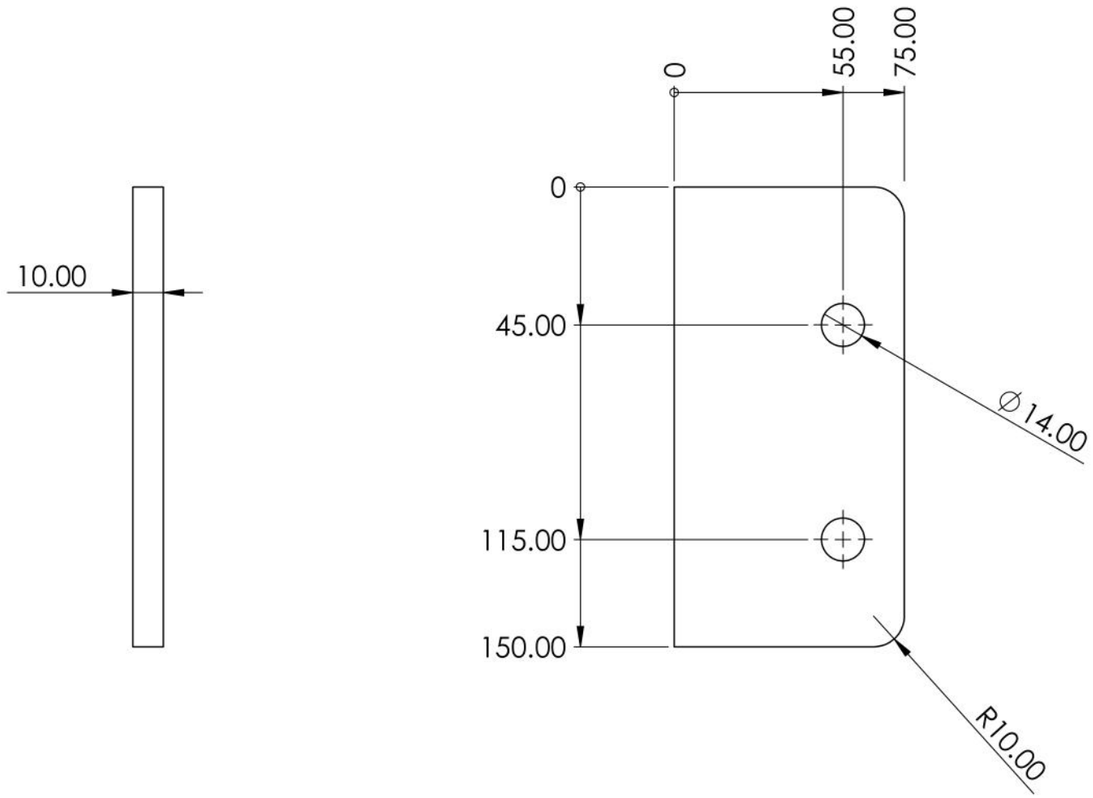

	NAME	DATE
MODELED BY	BF	22/02/21
DRAWN BY	BF	29/03/21
CHECKED BY	AH	09/04/21
APPROVED BY	SJ	09/04/21

IF IN DOUBT-ASK

CUSTOMER: APG

REV: d2

PO & PRODUCT: Portal Frame

DESCRIPTION:

UNLESS OTHERWISE SPECIFIED:
DIMENSIONS ARE IN MILLIMETERS

MATERIAL:

DRAWING NO: Top Door Cleat

DO NOT SCALE DRAWING

FINISH:

SCALE: 1:2

SHEET OF

A3

odoni elwell
consult • design • manufacture • install

DESCRIPTION	QTY.	LENGTH
128x160x6mm	18	6

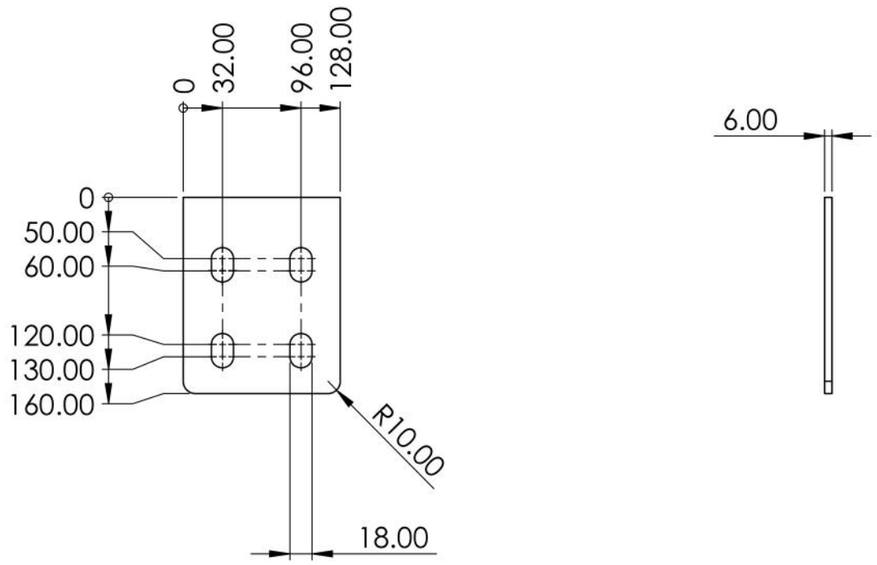

IF IN DOUBT-ASK

	NAME	DATE
MODELED BY	BF	22/02/21
DRAWN BY	BF	29/03/21
CHECKED BY	AH	09/04/21
APPROVED BY	SJ	09/04/21

CUSTOMER: APG

REV: d2

PO & PRODUCT: Portal Frame

DESCRIPTION:

UNLESS OTHERWISE SPECIFIED:
DIMENSIONS ARE IN MILLIMETERS

MATERIAL:

DRAWING NO: 128x160x6mm

DO NOT SCALE DRAWING

FINISH:

SCALE: 1:5

SHEET OF

A3

odoni elwell
consult • design • manufacture • install

DESCRIPTION	QTY.	LENGTH
140mm Zed Cleat	12	6

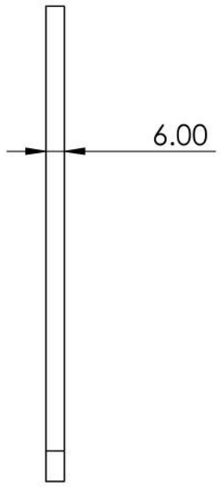

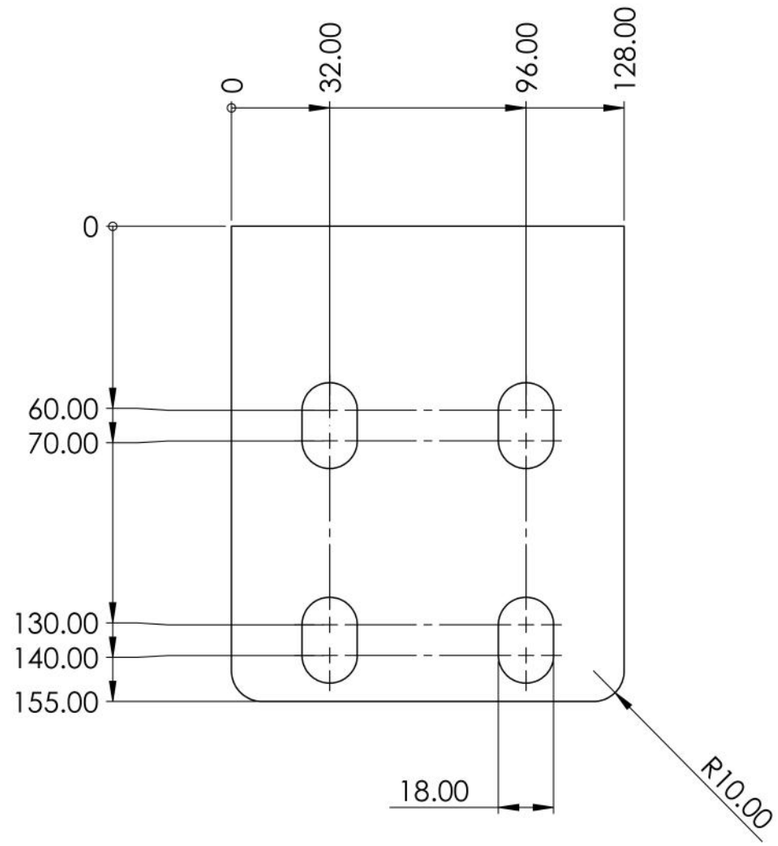

	NAME	DATE
MODELED BY	BF	22/02/21
DRAWN BY	BF	29/03/21
CHECKED BY	AH	09/04/21
APPROVED BY	SJ	09/04/21

CUSTOMER: APG

REV: d2

PO & PRODUCT: Portal Frame

DESCRIPTION:

IF IN DOUBT-ASK

UNLESS OTHERWISE SPECIFIED:
DIMENSIONS ARE IN MILLIMETERS

MATERIAL:

DRAWING NO: 140mm Zed Cleat

DO NOT SCALE DRAWING

FINISH:

SCALE: 1:2

SHEET OF

A3

odoni elwell
consult • design • manufacture • install

DESCRIPTION	QTY.	LENGTH
170mm Eaves Cleat	6	6

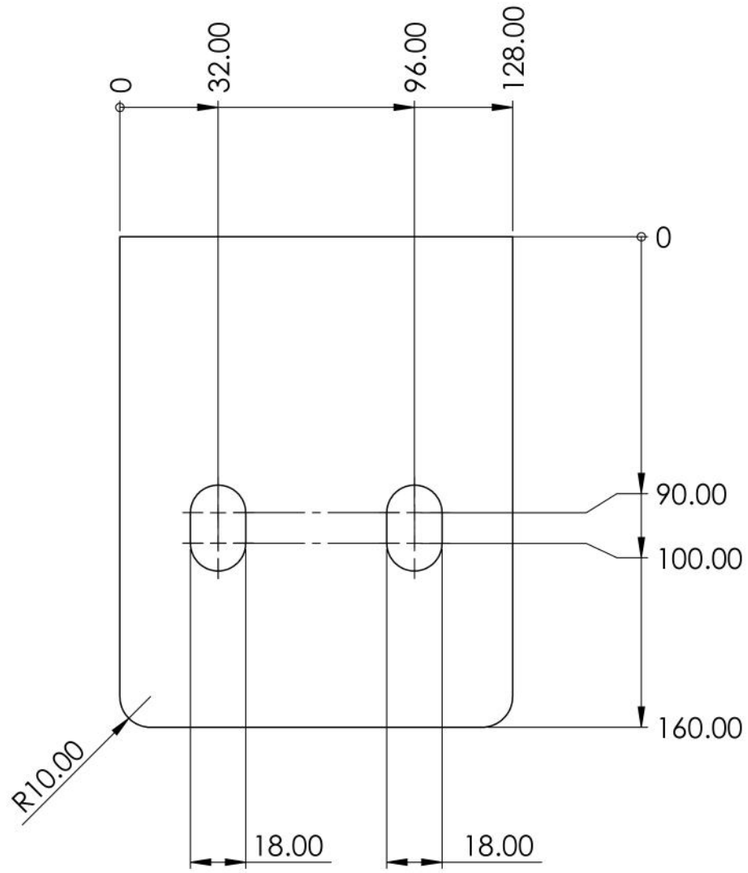

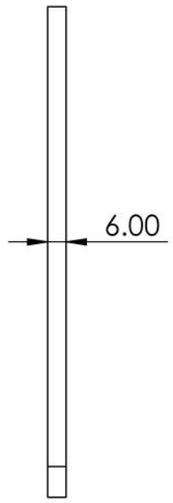

	NAME	DATE		
MODELED BY	BF	22/02/21	CUSTOMER: APG	REV: d2
DRAWN BY	BF	29/03/21	PO & PRODUCT: Portal Frame	
CHECKED BY	AH	09/04/21	DESCRIPTION:	
APPROVED BY	SJ	09/04/21		

IF IN DOUBT-ASK

UNLESS OTHERWISE SPECIFIED: DIMENSIONS ARE IN MILLIMETERS	MATERIAL:	DRAWING NO: 170mm Eaves Cleat	
DO NOT SCALE DRAWING	FINISH:	SCALE: 1:2	SHEET OF	A3

odoni elwell
consult • design • manufacture • install

ITEM NO.	PART NUMBER	DESCRIPTION	QTY.	LENGTH
36	Plate sandwich		8	
36.1		128x43x4mm	1	4

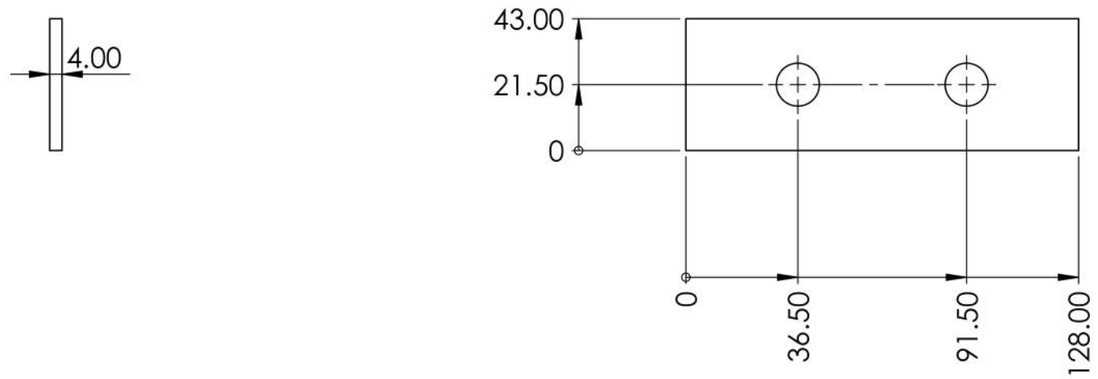

	NAME	DATE		
MODELED BY	BF	22/02/21	CUSTOMER: APG	REV: d2
DRAWN BY	BF	29/03/21	PO & PRODUCT: Portal Frame	
CHECKED BY	AH	09/04/21	DESCRIPTION:	
APPROVED BY	SJ	09/04/21		

IF IN DOUBT-ASK

UNLESS OTHERWISE SPECIFIED: DIMENSIONS ARE IN MILLIMETERS	MATERIAL:	DRAWING NO: Plate sandwich	
DO NOT SCALE DRAWING	FINISH:	SCALE: 1:2	SHEET OF	A3

odoni elwell
consult • design • manufacture • install